| | |
|---|---|
| Product Name: | e-Boost 2 – 60PSI |
| Product Description: | Electronic Boost Controller |
| Product Number: | TS-0301-1001 to TS-0301-1013 |

TURBOSMART® PERFORMANCE PRODUCTS

---


Parts list ..... 2
BEFORE YOU START – IMPORTANT NOTES ..... 3
INSTALLATION ..... 3
Optional Accessories ..... 3
Mounting the e-Boost 2 ..... 3
Wiring ..... 5
Installing the e-Boost 2 Solenoid ..... 6
INTERNAL WASTEGATE CONNECTION ..... 6
Single solenoid, single turbocharger hook up ..... 6
Single solenoid, twin parallel turbocharger hook up ..... 7
Twin solenoid, twin parallel turbocharger hook up ..... 7
EXTERNAL WASTEGATE CONNECTION ..... 8
Single port, single solenoid, single turbo connection Method ..... 8
Single port, single solenoid, twin turbo connection Method ..... 9
Single port, twin solenoid, twin turbo connection Method ..... 9
Two port, single solenoid, single turbo connection Method (1) ..... 10
Two port, single solenoid, twin turbo connection Method (1) ..... 10
Two port, twin solenoid, twin turbo connection Method (1) ..... 11
Two port, single solenoid, single turbo connection Method (2) ..... 11
Two port, single solenoid, Twin turbo connection Method (2) ..... 12
Two port, twin solenoid, Twin turbo connection Method (2) ..... 12
Two port, single 4 port solenoid, single turbo connection Method (3) ..... 13
Two port, single 4 port solenoid, twin turbo connection Method (3) ..... 13
Two port, twin 4 port solenoid, twin turbo connection Method (3) ..... 13
BASIC OPERATION ..... 14
Live mode menu ..... 15
QUICK START GUIDE ..... 16
2) Setting obS (Over boost shutdown): ..... 16
3) Setting nSP (Number of set points): ..... 16
4) Setting CYL (Number of Cylinders): ..... 16
5) Setting SCL (Scale): ..... 17
6) Setting bGr (Bar graph): ..... 17
BOOST SETUP ..... 17
10) Setting SP1 (Set point): ..... 17
11) Setting GP1 (Gate pressure): ..... 18
12) Setting SN1 (Sensitivity): ..... 18
ADVANCED FUNCTIONALITY ..... 19
RPM Signal Connection (OPTIONAL) ..... 20
SL (Switch Logic) ..... 20
AU (Auxilary output) ..... 27
AU (Auxilary output) ..... 28
LE1/LE2 Shift/warning lights (LED 1/LED 2) ..... 28
AL (Audible alarm) ..... 28
dS (Delayed switching) ..... 29
COr (Boost correction) ..... 29
rSP (RPM based set point mapping) ..... 30

Pin (Security Pin number) ..... 30
Ser (Serial Number) ..... 30
Sol (Solenoid Cycle) ..... 30
ZEr (Gauge Zero) ..... 30
rES (Reset) ..... 31
VEHICLE WIRING DIAGRAMS ..... 31
TROUBLESHOOTING ..... 37

# Parts list

| Quantity | Part | Description |
|---|---|---|
| 1 | e-Boost 2 Head unit | Boost controller |
| 6ft | 4mm poly tube | Connecting vacuum/pressure to e-Boost head unit |
| 6ft | 3mm Silicon vacuum tube | Connecting vacuum/pressure to e-Boost head unit |
| 6ft | 5mm Silicon vacuum tube | Connecting pressure source to solenoid and actuator |
| 1 | 8 pin wiring loom | Wiring loom |
| 1 | 3 Port solenoid | For controlling air pressure to wastegate actuator |
| 3 | 1/8 NPT pressure nipples | For connecting pressure lines to the solenoid |
| 1 | Fuse holder with 5amp fuse | For connecting power to e-Boost loom |
| 1 | 5/32 hose tee piece | Splicing existing vacuum line for signal to e-Boost head unit |
| 2 | 1/4 - 3/16 hose reducer | Connecting 3mm - 5mm vacuum tube |
| 1 | Poly tube - 3mm joiner | Connecting 4mm poly tube to 3mm silicon vacuum tube |
| 1 | Solenoid mounting bracket | For mounting solenoid to chassis |
| 2 | M3 X 20 Socket head screws | For mounting the solenoid to the bracket |
| 1 | Panel mount bracket | Mounting e-Boost head unit to a panel |
| 1 | M6 X 20 Grub screw | For panel mount bracket |
| 1 | M6 Half nut | For panel mount bracket |
| 1 | M6 Washer | For panel mount bracket |
| 4 | 3mm spring clamps | For securing 3mm vacuum hose to fittings |
| 6 | 5mm spring clamps | For securing 5mm vacuum hose to fittings |
| 1 | 6mm crimp on connector | For securing the ground wire to the chassis |
| 1 | 100mm heat shrink | For insulating joined wires |
| 10 | 100mm cable ties | For securing hoses and lines |
| 1.8m | 2 core cable | For connecting the wiring loom to solenoid |
| 2 | M6 X 25mm socket head screw | Mounting the solenoid bracket to chassis |
| 2 | M6 Nyloc nuts | Securing solenoid bracket to chassis |

# BEFORE YOU START – IMPORTANT NOTES

- Turbosmart recommends that your e-Boost2 is fitted by an appropriately qualified technician.
- Consult your local tuning specialist before setting your boost pressure, setting boost beyond your engines capability can result in severe engine damage or failure!
- Turbosmart recommends that the engines Air/Fuel ratio is checked once the desired boost pressure is set, any increase in boost pressure can cause the engine to run lean resulting in severe engine damage or failure.
- Turbosmart recommends that the e-Boost2 is not used in conjunction with any type of "Draw Through" Fuel System.
- Turbosmart recommends that boost pressure is set using a Dynamometer and not on public roads.
- The e-Boost2 may not be able to completely compensate for a drop in boost pressure at high RPM due to the turbocharger operating beyond its maximum efficiency range i.e. incorrect turbocharger sizing or excessive exhaust backpressure.
- The e-Boost2 cannot compensate for increases in boost pressure at high RPM due to inadequate waste gate flow capacity; the turbo system must maintain a steady base boost curve.
- The e-Boost2 cannot be used with external waste gates that are in a poor, worn or non-serviceable condition.
- For best results your turbocharger should be correctly sized for your application.
- A Turbosmart Fuel Cut Defender may need to be used in conjunction with your e-Boost2
- Erratic operation of electronic parts can be caused by Electro Magnetic Interference (EMI). EMI can be generated by aftermarket ignition systems such as CDI which, if wired incorrectly, generate large amounts of EMI through the vehicles electrical system. This can cause items such as ECU's and boost controllers to be effected. Please follow ignition system installation instructions VERY carefully to avoid EMI affecting the e-Boost.

# INSTALLATION

## *Optional Accessories*

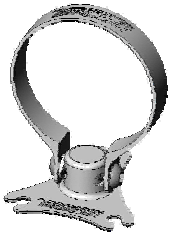

**Dash Mount**
**60mm - TS-0301-2001**
**66mm - TS-0301-2013**

**LED Ring Mount**
**Dual Silver 66mm – TS-0301-2006**
**Dual Black 66mm – TS-0301-2007**
**Dual Silver 66mm – TS-0301-2017**
**Dual Black 66mm – TS-0301-2018**

**Roll Cage Mount**
**60mm - TS-0301-2002**
**66mm - TS-0301-2014**

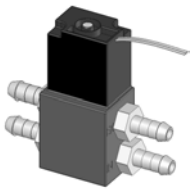

**4 Port Solenoid**
**TS-0301-2003**

## *Mounting the e-Boost 2*

- The e-Boost2 is not waterproof and must be mounted inside the cabin. The unit has an operating temperature range of -5$^{O}$C to +70$^{O}$C.

- The e-Boost2 is designed to be panel mounted with the bracket supplied. Alternatively the 60mm e-Boost2 can be mounted using the Turbosmart 60mm dash mounting accessory, pod or "A pillar" mounts. If you have the 66mm e-Boost2 it can be mounted using the Turbosmart 66mm dash mount accessory. The Turbosmart dash mounting accessory offers full tilt and swivel adjustment.

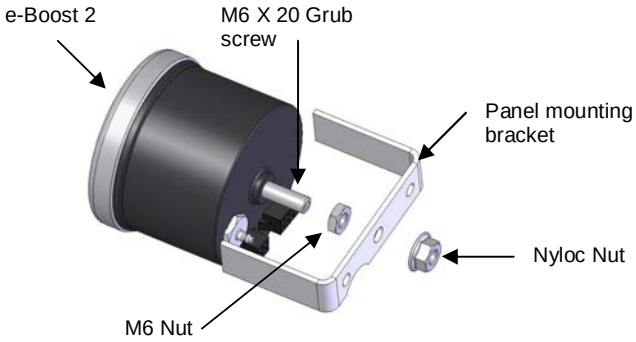

- The E-Boost 2 requires a vacuum/pressure signal from the intake manifold to function. A combination of poly tube and silicone hose is used to connect the E-boost 2 to a adequate vacuum/pressure signal. Route the poly tube from the E-boost 2 head unit through the fire wall approximately 100mm (4") only as the poly tube is not rated to the high temperatures of the engine bay.

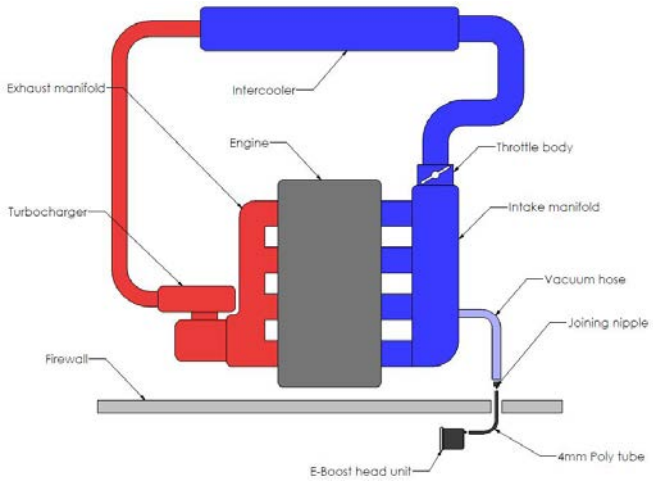


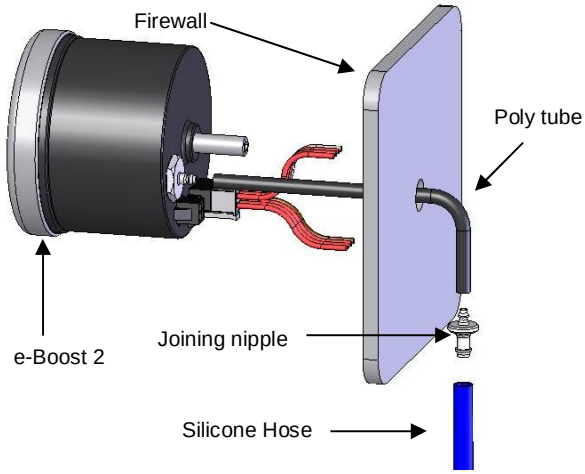


- Use the connecting barb to join the poly tube to the 3mm ID silicon hose at the firewall/bulkhead. Ensure the poly tube is pressed all the way onto the connecting barb

- Route the silicon hose through the engine bay and connect it to a pressure/vacuum signal from the inlet manifold. Use the supplied tee piece if necessary.

- Secure all connections with the supplied hose clamps

## *Wiring*

- The e-Boost2 must be connected to a typical automotive12 volt negative earth electrical system.
- Soldering or Crimp on electrical connectors must be used on all electrical connections
- Unused wires must be insulated with electrical tape so that they do not touch other wires or the chassis
- Refer to the following table and diagram for detail on wiring the e-Boost2.

| Wire | Connect to |
|---|---|
| **RED** | + 12 Volts switched through ignition – connect via 5 Amp fuse supplied |
| **BLACK** | Chassis, earth or ground |
| **GREY** | Solenoid wire 1 – connect using wire supplied – polarity not important |
| **BROWN** | Solenoid wire 2 - connect using wire supplied – polarity not important |
| **YELLOW** | RPM signal from ECU or negative terminal of an ignition coil **OPTIONAL** |
| **WHITE** | Auxiliary output – switched to ground – see diagram below **OPTIONAL** |
| **GREEN** | External set point switching **OPTIONAL** |
| **ORANGE** | External set point switching **OPTIONAL** |

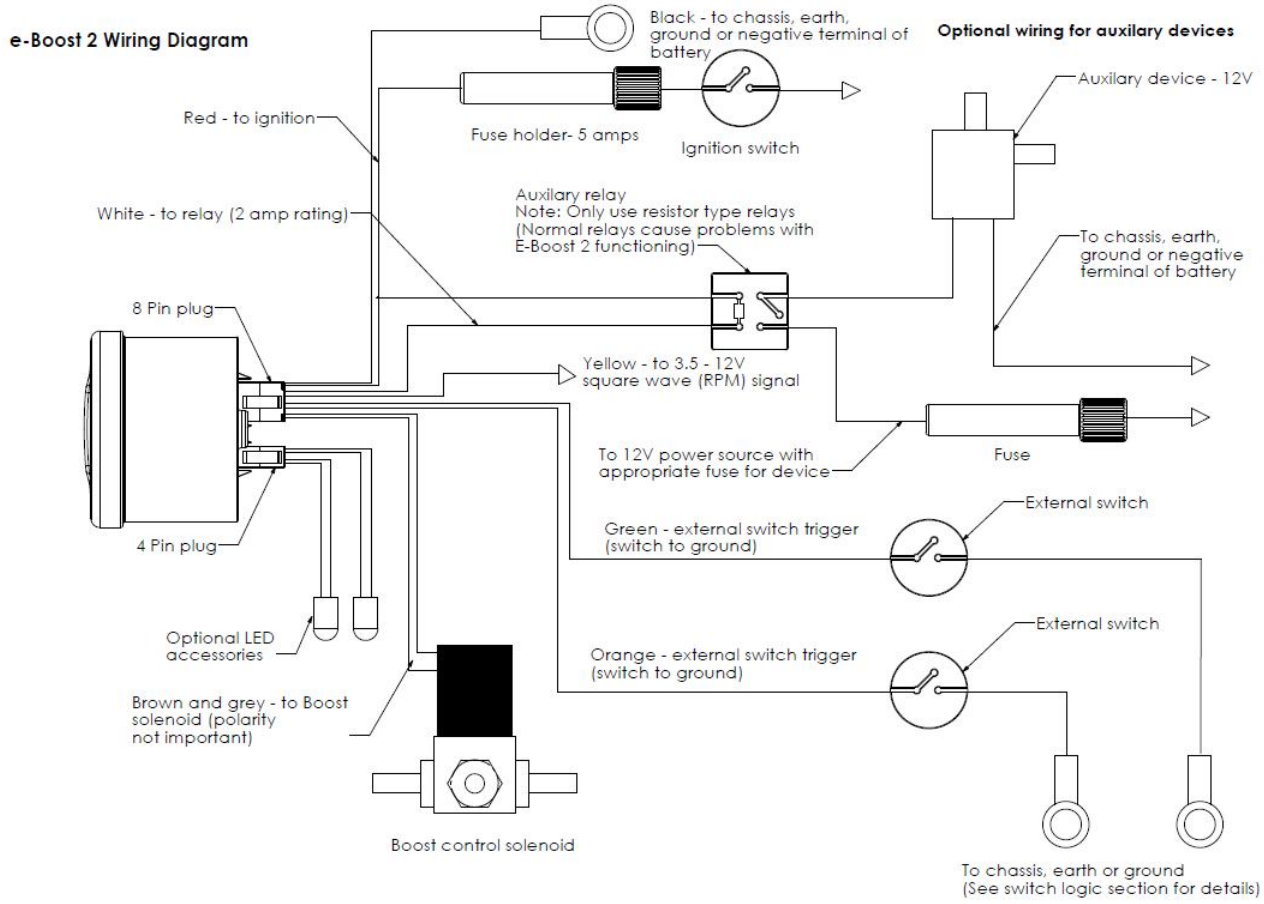

## *Installing the e-Boost 2 Solenoid*

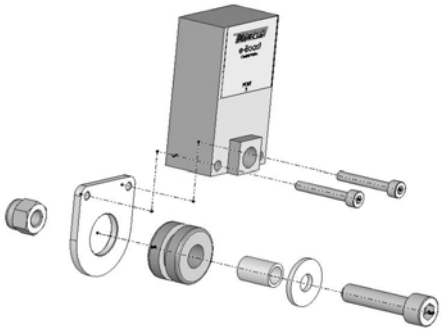

- The e-Boost2 solenoid is rated to a maximum temperature of 100 degrees Celsius (212 degrees Fahrenheit), ensure that it is mounted a minimum of 250mm (10 Inches) away from the heat of the turbo or exhaust manifold, otherwise heat shielding maybe required.

- Mount the e-Boost2 solenoid in an appropriate position in the engine bay with the mounting kit supplied.

- Fit the rubber grommet inside the mounting plate. Slide the sleeve inside the grommet. Use the M3 screws to bolt the solenoid to the mounting bracket – Note use loctite on the threads to secure. Use the M6 screw, washer and Nyloc nut to mount in a suitable location in the engine bay.

- The e-Boost 2 head unit is capable of controlling two solenoids. The use of twin solenoids is not necessary but is recommended in twin turbo setups on V configuration engines as this reduces the length of hose required for plumbing which aids in response and control of the wastegates.

- The solenoid must be connected to a pressure only source which must be located before the intercooler, ideally off the compressor cover of the turbocharger. The air temperature before the intercooler is less affected by ambient conditions which will give you more consistent boost control.

# INTERNAL WASTEGATE CONNECTION

**WARNING!** Changing to different connection methods can cause a higher than expected increase in boost pressure. Turbosmart recommends adjusting your boost controller back to its minimum setting and measuring the new minimum boost pressure achieved by the new setup before increasing your boost again.

**Note: If your vehicle is fitted with a factory boost control solenoid, the hoses that run from the solenoid to the pressure source and to the wastegate actuator must be disconnected from the solenoid. Leave the solenoid plugged into the wiring loom so that the ECU is not affected.**

Most factory turbocharged vehicles use an internal waste gate system to control boost pressure. The e-Boost2 controls boost pressure by controlling the pressure signal that the waste gate actuator receives from the turbocharger. Please note that the e-Boost2 cannot be used to obtain a boost pressure lower than the standard waste gate actuator's pressure setting.

- Some factory hoses have a small restrictor fitted inside them, if the factory hoses are reused over boosting or boost spiking may occur.
- Secure all connections with hose clamps.

## *Single solenoid, single turbocharger hook up* *(Basic single internal wastegate setups)*

- Port (1): vents pressure from the solenoid. Connect this hose to the intake side of the turbo, between the air cleaner and the inlet of the turbocharger. Otherwise connect a short piece of the silicon hose and face the vent downwards to stop water or debris entering the solenoid.
- Port (2): to the internal wastegate actuator
- Port (3): to pressure only source

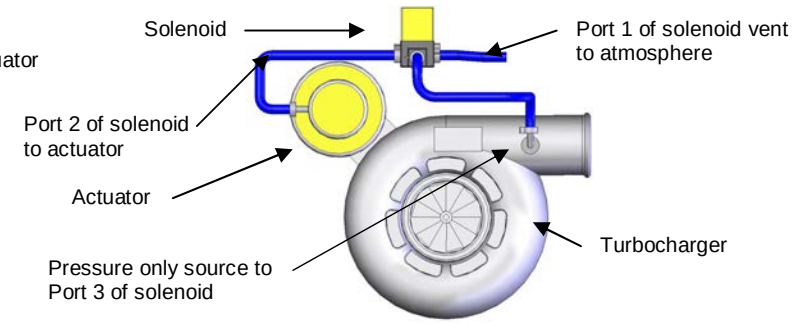


If you are unable to achieve your desired boost pressure, it is normally due to exhaust manifold backpressure forcing the internal waste gate to open. To increase your boost pressure further, fit a higher pressure waste gate actuator to increase your minimum boost pressure.

**WARNING!** Fitting a higher pressure waste gate actuator may cause a higher than expected increase in boost pressure**.**

Turbosmart recommends resetting the boost set point values to Zero and measure the new minimum boost pressure before increasing your boost set point values.

## *Internal wastegates with 2 ports*

- Port (1): vents pressure from the solenoid.
- Port (2): connect to one of the ports of the actuator
- Port (3): to pressure only source
- Block off unused port on the actuator with suitable blank

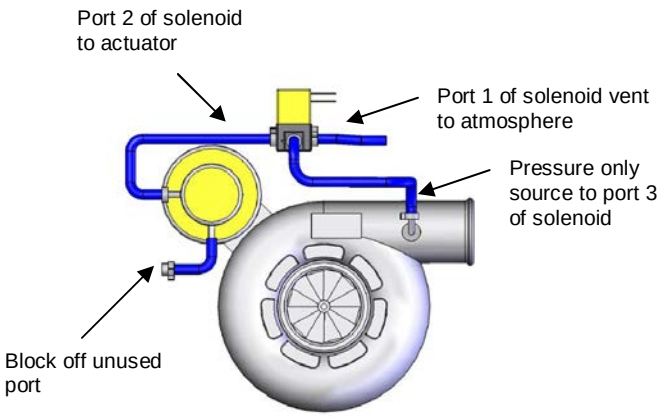


## *Single solenoid, twin parallel turbocharger hook up*

*(For straight configuration twin parallel turbocharger engines E.g. RB26DETT)*

- The e-Boost2 is capable of controlling twin internal wastegate turbochargers with a single solenoid.
- This method is used when the turbochargers are mounted close to each other allowing the solenoid to be mounted close to both actuators
- Each solenoid port is connected as follows:

Port (1): vents pressure from the solenoid. Connect this hose to the intake side of the turbo, between the air cleaner and the inlet of the turbocharger. Otherwise connect a short piece of the silicon hose and face the vent downwards to stop water or debris entering the solenoid.

Port (2): to tee piece that feeds both actuators

Port (3): to pressure only source

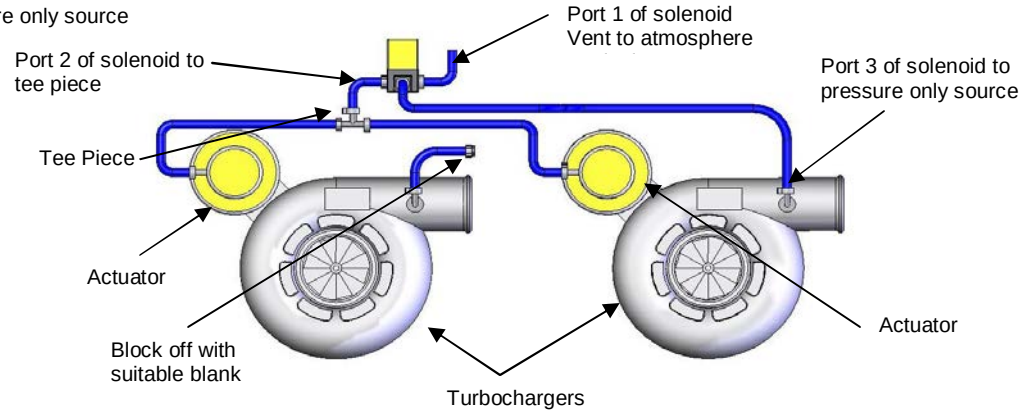


## *Twin solenoid, twin parallel turbocharger hook up*

(For *V configuration twin parallel turbocharger engines E.g. V6, V8 etc)*

- The e-Boost2 is capable of controlling two solenoids for twin parallel turbocharger setups.
- This method is used when there is a great distance between the wastegates. This allows the solenoids to be mounted close to the wastegates to minimise the length of hose used and to maximise response
- You will need a second solenoid for this method (TS-0301-3003)
- Connect the grey wire from the e-Boost wiring loom to one of the wire from each solenoid.
- Connect the brown wire from the e-Boost wiring loom to the remaining wire from each solenoid.
- Each solenoid port is connected as follows:

Port (1): vents pressure from the solenoid. Connect this hose to the intake side of the turbo, between the air cleaner and the inlet of the turbocharger. Otherwise connect a short piece of the silicon hose and face the vent downwards to stop water or debris entering the solenoid.

Port (2): to the internal wastegate actuator

Port (3): to pressure only source

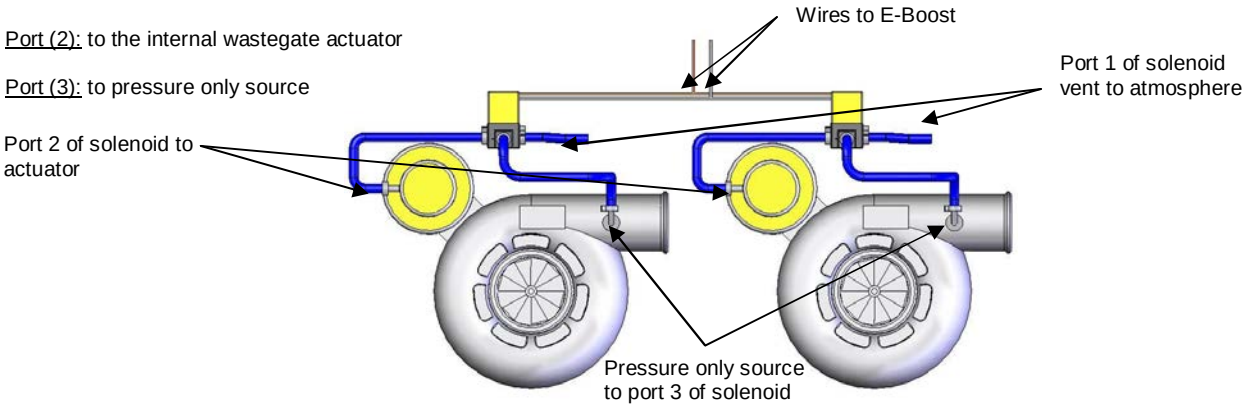


# EXTERNAL WASTEGATE CONNECTION

The first method of installation is a one port connection. If the desired boost level is not achieved i.e. boost level is too low, or not controllable, it is recommended that the wastegate spring be changed to a spring which is closer to the desired boost pressure or to trial a 2 port connection method.

There are 3 different 2 port connection methods that can be trialled to achieve different results. The 2 port method (1) can be used if there is high exhaust manifold back pressure forcing the valve open. The 2 port method (2) allows the user to achieve the maximum boost pressure their turbo system is capable of. If a wide range of boost pressures is desired i.e. 5 – 40 PSI, the 2 port method (3) with a 4 port solenoid (sold separately – TS-0301-2003) might be needed.

A single solenoid can be used to control twin wastegates in a twin turbo setup but it is recommended that twin solenoids are used in twin turbo setups to reduce the length of the pressure hoses to aid in control and response of the wastegates.

## *Single port, single solenoid, single turbo connection Method*

*(Basic single wastegate setup)*

- Port 1 of solenoid vent to atmosphere
- Port 2 of solenoid to bottom port of wastegate
- Port 3 of solenoid to Pressure only source

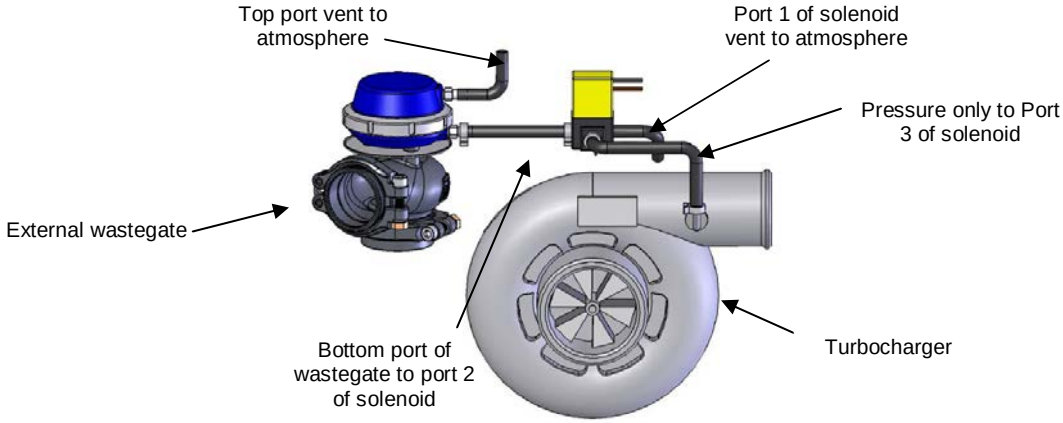

## *Single port, single solenoid, twin turbo connection Method*

*(For straight configuration twin parallel turbocharger engines E.g. RB26DETT)*

- Port 1 of solenoid vent to atmosphere
- Port 2 of solenoid to bottom port of wastegate
- Port 3 of solenoid to Pressure only source
- Block off other turbocharger pressure port (if needed)

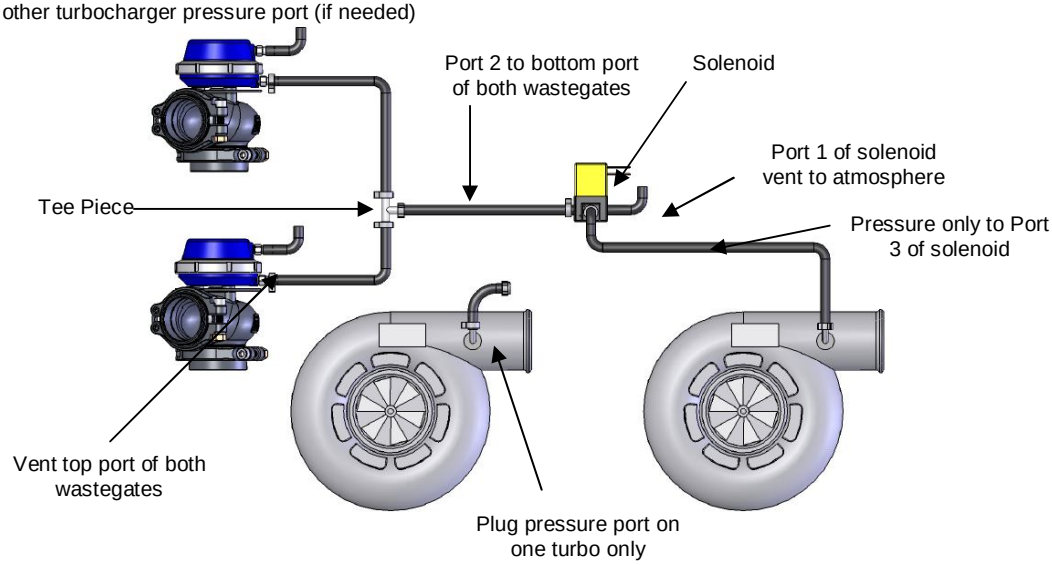


## *Single port, twin solenoid, twin turbo connection Method*

*(For V configuration twin parallel turbocharger engines E.g. V6, V8 etc)*

- Port 1 of solenoid vent to atmosphere
- Port 2 of solenoid to bottom port of wastegate
- Port 3 of solenoid to Pressure only source
- Join the wires from both solenoids together (polarity not important) and then connect them to the brown and grey wires of the wiring loom

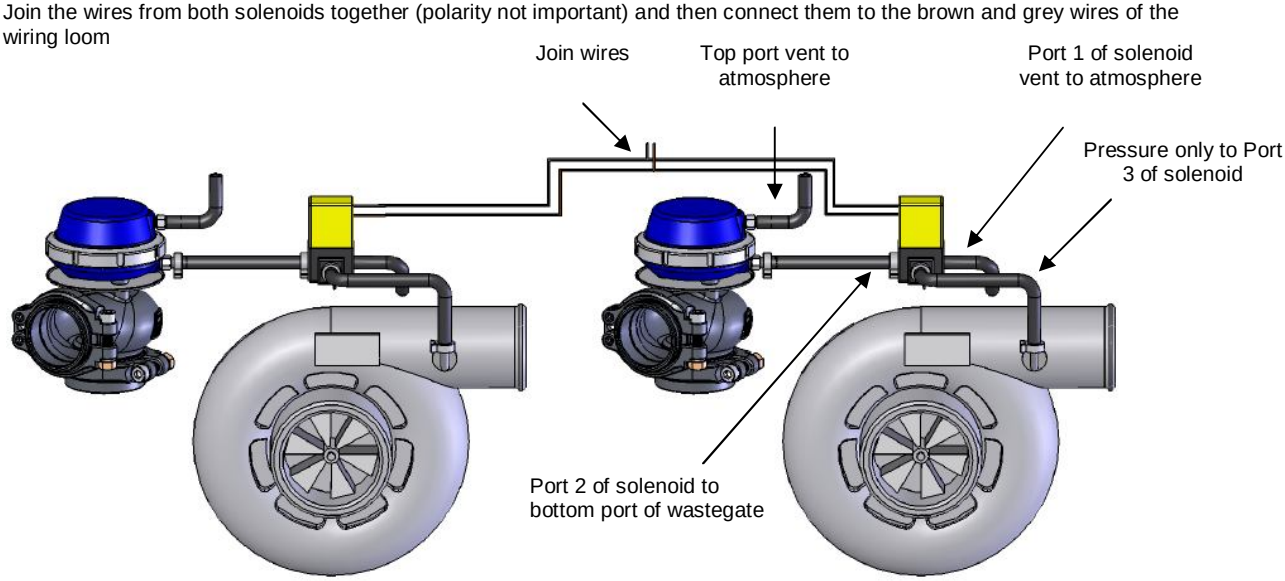

## *Two port, single solenoid, single turbo connection Method (1)*

*(For controlling boost on a single turbo, single wastegate, single solenoid turbo system with high back pressure)*

***NOTE:** An increase in your minimum boost pressure is expected when using any of the 2 port connection methods. Ensure all boost set point values and gate pressure values are set to Zero and measure the new minimum boost pressure achieved by this method before increasing your Boost Set Point values.

- Connect the bottom port of the wastegate and Port 1 of the solenoid to a Pressure only source via a tee piece
- Port 2 of the solenoid to the top port of the wastegate
- Port 3 of solenoid vent to atmosphere

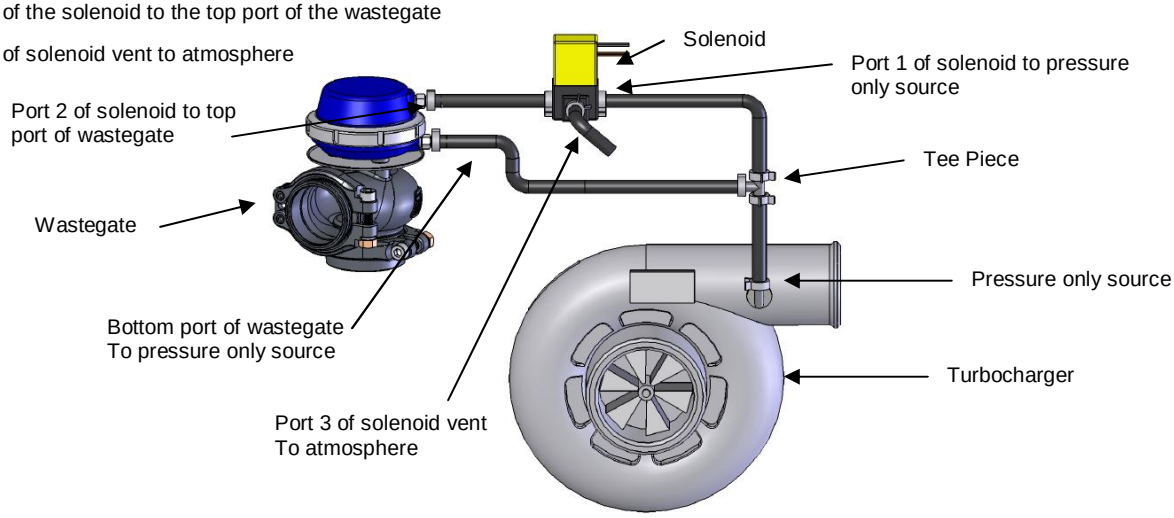


## *Two port, single solenoid, twin turbo connection Method (1)*

*(For controlling boost on a twin turbo, twin wastegate, single solenoid turbo system, on a straight configuration engine with high back pressure)*

- Connect the bottom port of the wastegates and Port 1 of the solenoid to a Pressure only source via tee pieces
- Port 2 of the solenoid to the top port of the wastegates via tee pieces
- Port 3 of solenoid vent to atmosphere
- Block off other turbocharger pressure port (if needed)

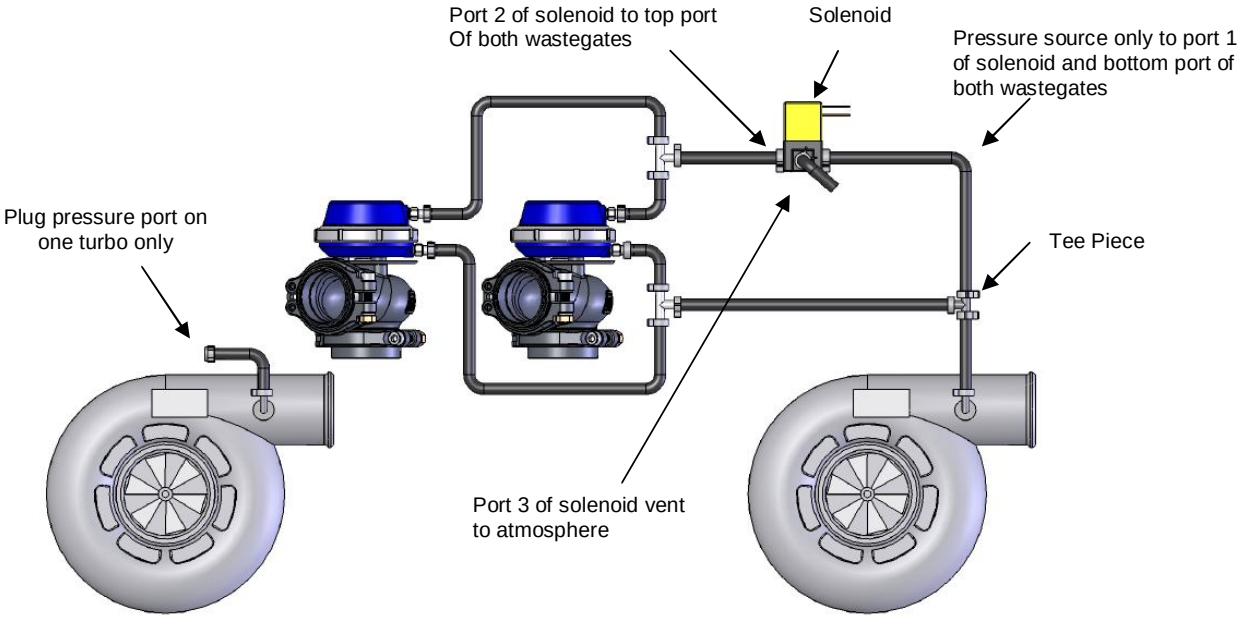

## *Two port, twin solenoid, twin turbo connection Method (1)* *(For controlling boost on a twin turbo, twin wastegate, twin solenoid turbo system, on a V configuration engine with high back pressure)*

- Connect the bottom port of the wastegate and Port 1 of the solenoid to a Pressure only source via a tee piece
- Port 2 of the solenoid to the top port of the wastegate
- Port 3 of solenoid vent to atmosphere
- Join the wires from both solenoids together (polarity not important) and then connect them to the brown and grey wires of the wiring loom

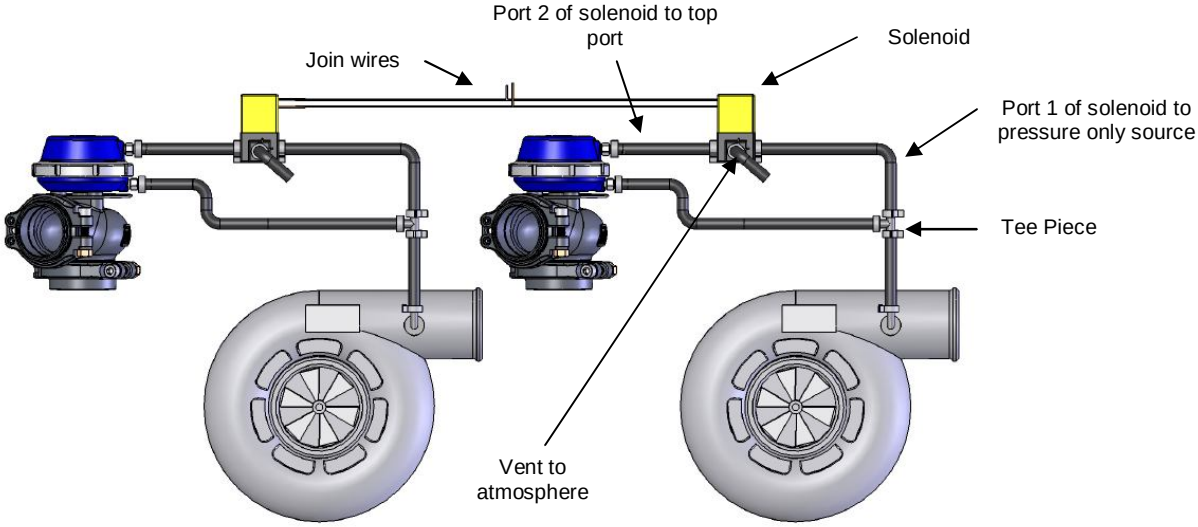


## *Two port, single solenoid, single turbo connection Method (2)*

*(For obtaining maximum boost pressure on your single turbo system)*

- Port 1 of solenoid to Top port of wastegate
- Port 2 of solenoid to Pressure only source
- Port 3 of solenoid to Bottom port of wastegate

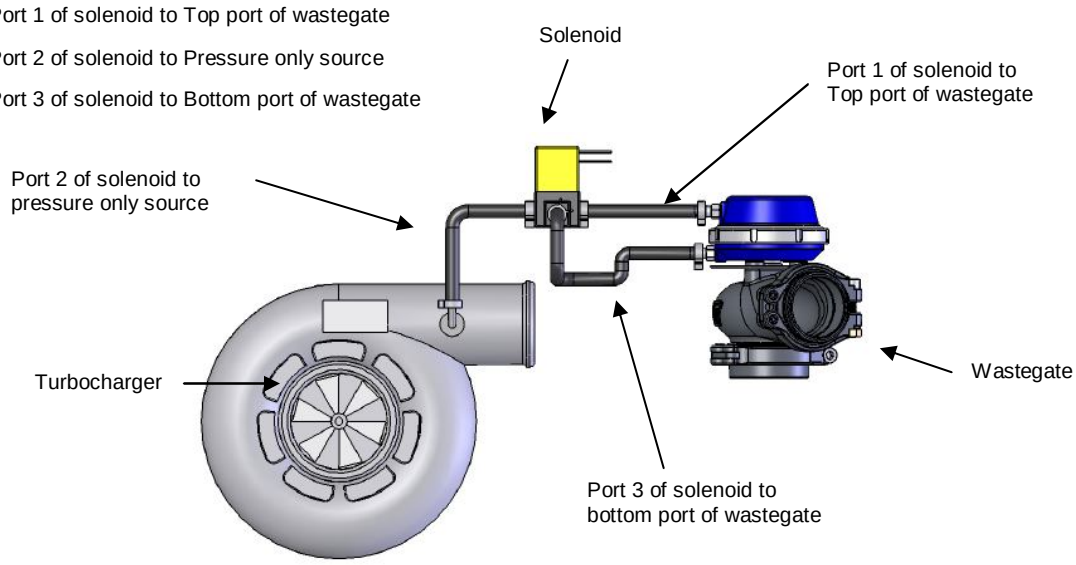

## *Two port, single solenoid, Twin turbo connection Method (2)*

*(For obtaining maximum boost pressure on your twin turbo straight engine)*

- Port 1 of solenoid to Top port of wastegates
- Port 2 of solenoid to Pressure only source
- Port 3 of solenoid to Bottom port of wastegates
- Block off other turbocharger pressure port (if needed)

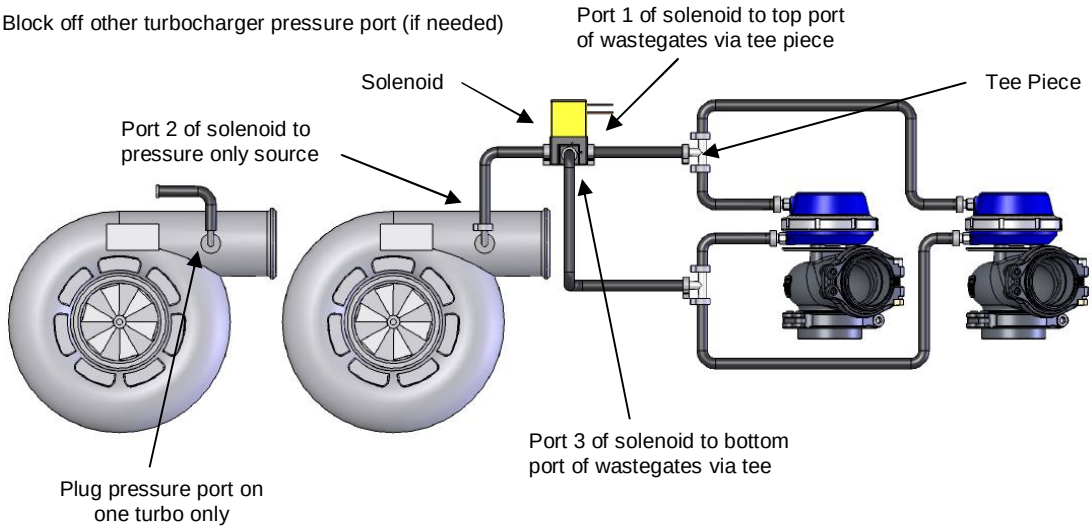


## *Two port, twin solenoid, Twin turbo connection Method (2)*

*(For obtaining maximum boost pressure on your twin turbo V configuration engine)*

- Port 1 of solenoid to Top port of wastegates
- Port 2 of solenoid to Pressure only source
- Port 3 of solenoid to Bottom port of wastegates
- Join the wires from both solenoids together (polarity not important) and then connect them to the brown and grey wires of the wiring loom

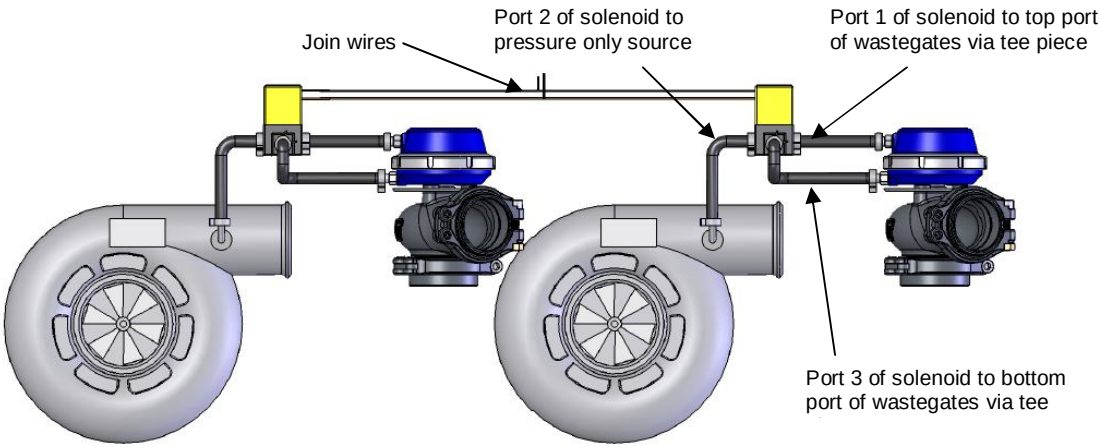

## *Two port, single 4 port solenoid, single turbo connection Method (3)*

*(For obtaining a wide range of boost pressures e.g. 5 – 40 PSI. This connection method has varying degrees of success depending on turbo system)*

- Port A of solenoid to Top port of wastegate
- Port B of solenoid to Bottom port of wastegate
- EX port of solenoid vent to atmosphere
- IN port of solenoid to Pressure only source

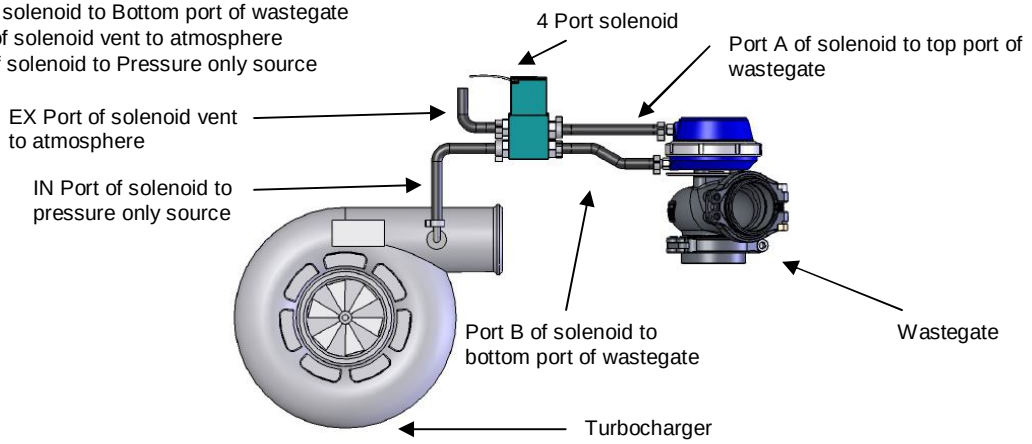


## *Two port, single 4 port solenoid, twin turbo connection Method (3)*

*(For obtaining a wide range of boost pressures e.g. 5 – 40 PSI on a straight configuration engine. This connection method has varying degrees of success depending on turbo system)*

- Port A of solenoid to Top port of wastegates
- Port B of solenoid to Bottom port of wastegates
- EX port of solenoid vent to atmosphere
- IN port of solenoid to Pressure only source

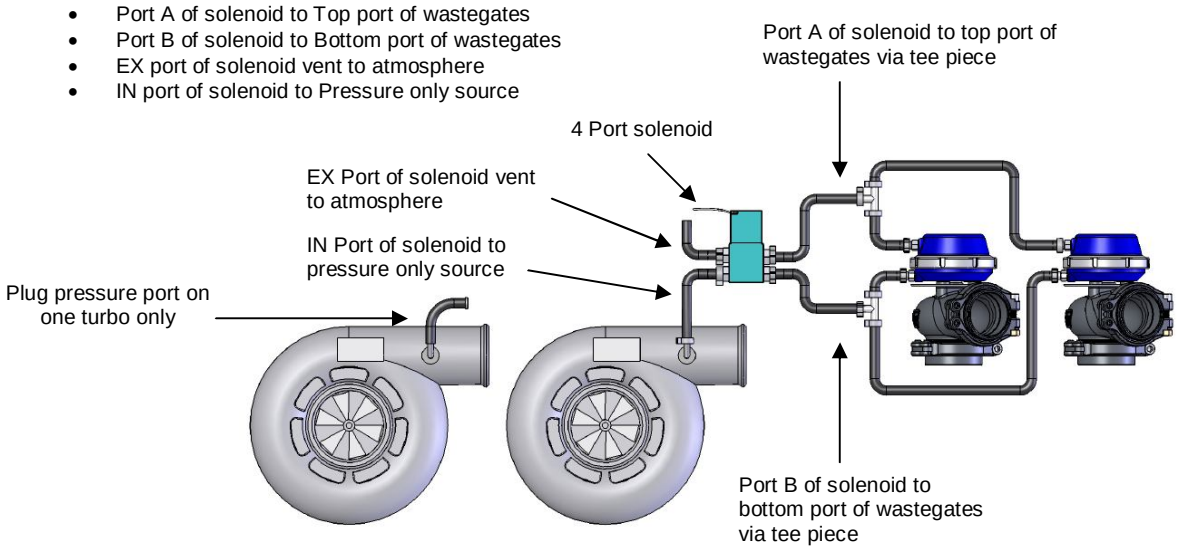


## *Two port, twin 4 port solenoid, twin turbo connection Method (3)*

*(For obtaining a wide range of boost pressures e.g. 5 – 40 PSI on a V configuration engine. This connection method has varying degrees of success depending on turbo system)*

- Port A of solenoid to Top port of wastegates
- Port B of solenoid to Bottom port of wastegates
- EX port of solenoid vent to atmosphere
- IN port of solenoid to Pressure only source
- Join the wires from both solenoids together (polarity not important) and then connect them to the brown and grey wires of the wiring loom
-

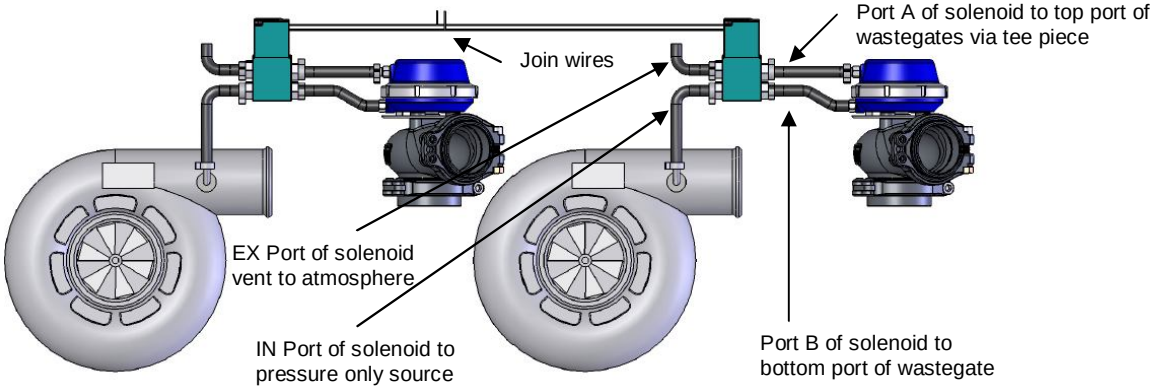

# BASIC OPERATION

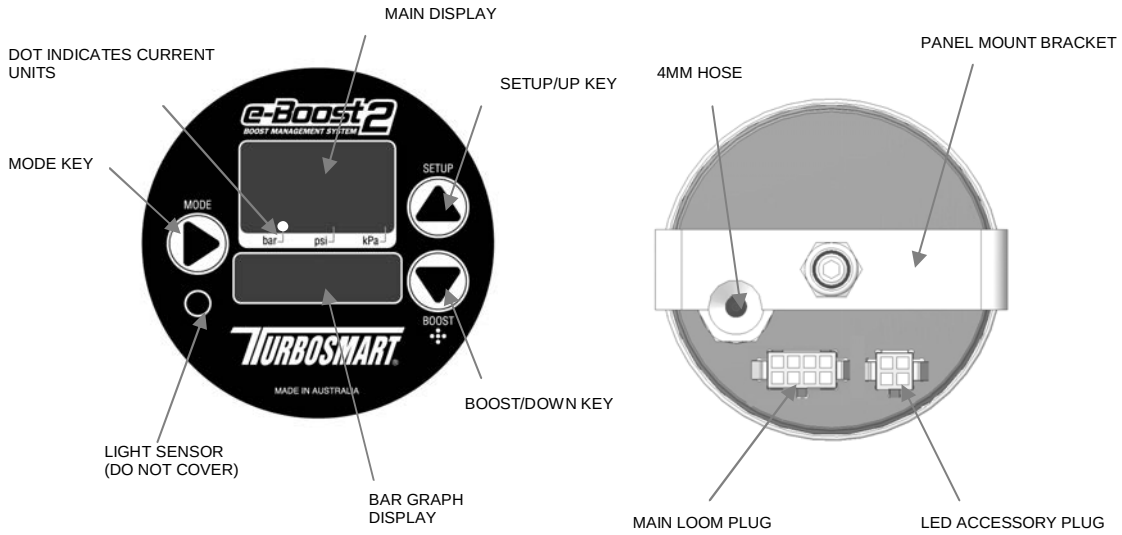


The e-boost2 is turned on by switching on your ignition.

**Turning off the e-Boost2:** The e-Boost2 is turned off by pressing and holding the **MODE** button for **five seconds** or turning off your ignition. If you turn the unit off with you ignition on pressing the **MODE** button momentarily will turn the unit back on.

**Display Mode:** Your e-boost2 has a display mode that may be used if showing your car. Pressing the **UP** and **DOWN** buttons together quickly will enter the display mode. “e-boost2” will scroll across the screen and the bar graph will scroll up and down. Pressing the **UP** and **DOWN** buttons together will exit display mode.

**Live Mode:** When the e-Boost2 is turned on, it automatically goes into live mode and displays the current vacuum/boost.

**Boost setup Menu:** To enter the boost setup menu, in live mode, press **MODE** and **BOOST/DOWN** key **ONCE** at the same time.

**Setup Menu:** To enter the setup menu, in live mode, press **MODE** and **SETUP/UP** Key **ONCE** at the same time.

**Navigation and adjusting values in menus:** Use the **UP** and **DOWN** keys to scroll or adjust values up and down.

**Entering menus:** Press the **MODE** key **ONCE** to enter any menu.

**Saving settings:** When adjusting values, once the desired value is selected, press the **MODE** key **ONCE** to save the value.

**Exiting menus:** When in any menu, **HOLDING** the **MODE** key will bring you back to the previous menu without saving the setting

# Live mode menu

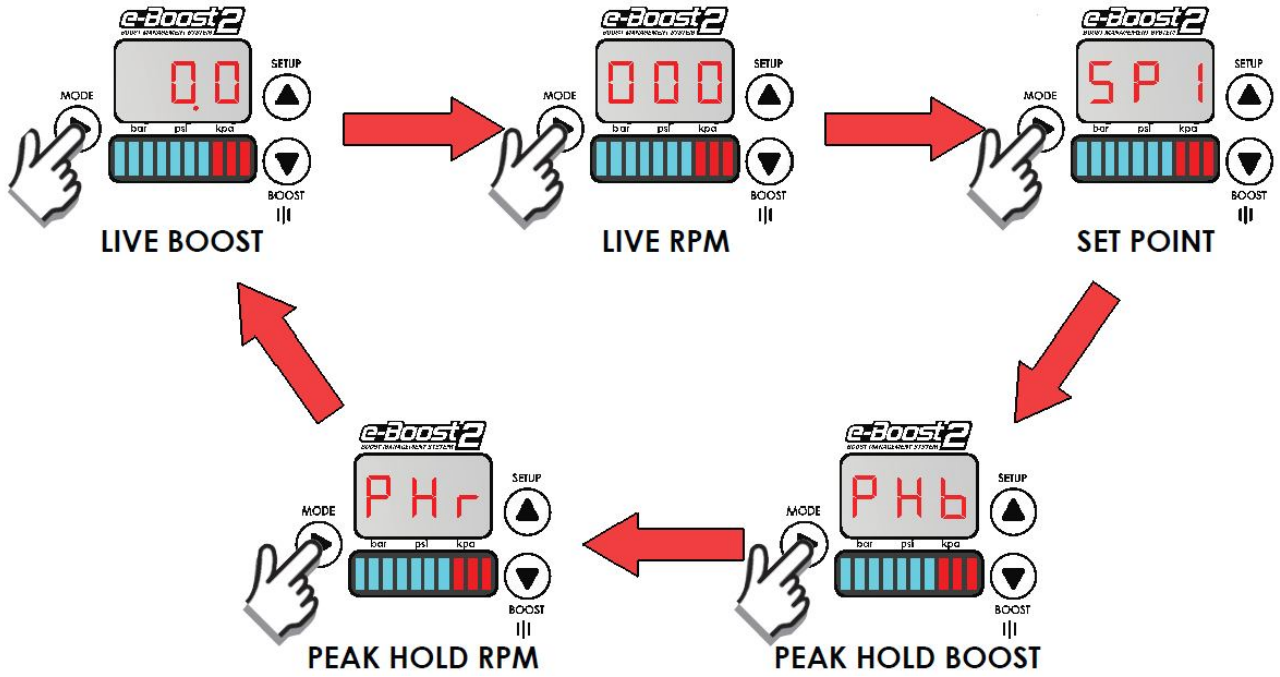


When the e-Boost2 is powered up, the display will automatically go into live mode. Pressing **MODE ONCE** will scroll through the live mode menu.

**Live Boost:** Live boost is the default display and will display live boost or vacuum readings.
**Live RPM:** Live RPM will display the current RPM of the engine. If you have not connected your RPM signal then this parameter will not appear.
**Set Point:** Shows the current set point value the unit is set to.
**Peak Hold Boost:** This function records the peak boost pressure the unit has measured. Each time a higher pressure is produced the previous figure is discarded and the new pressure is recorded (value will reset when the unit is switched off)
**Peak Hold RPM:** This function records the peak RPM the unit has measured. Each time a higher RPM is produced the previous figure is discarded and the new peak RPM is recorded (value will reset when the unit is switched off)

# QUICK START GUIDE

**1) Enter Setup menu by pressing MODE and SETUP/UP at the same time.**

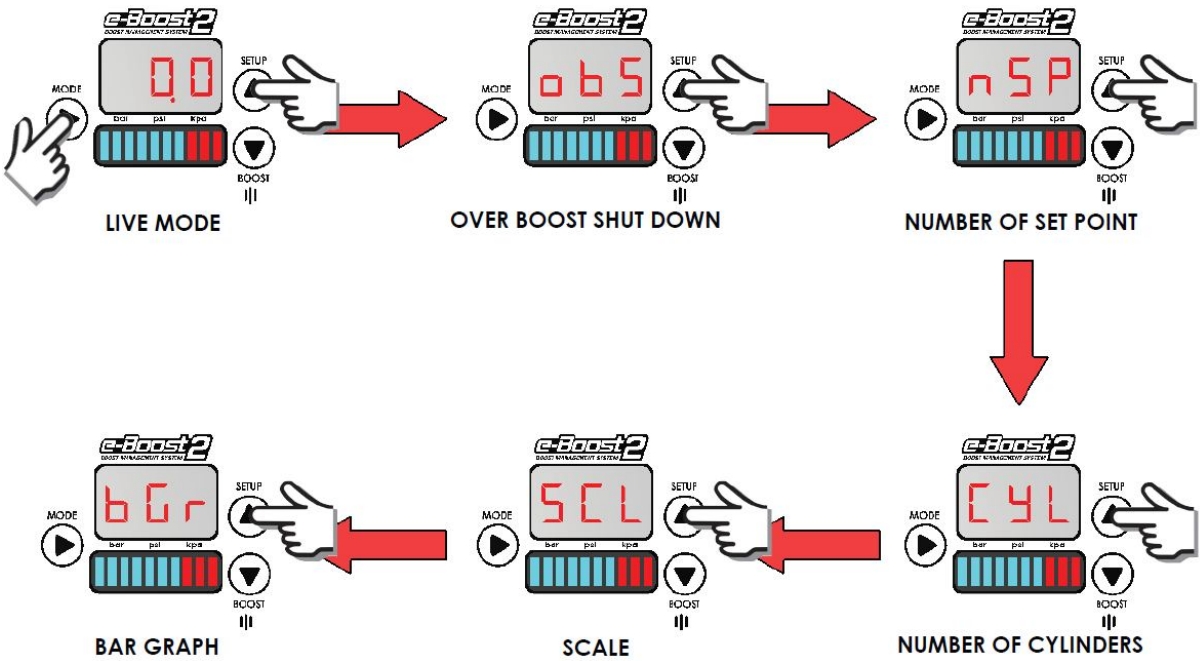

## *2) Setting obS (Over boost shutdown):*

**THIS MUST BE SET UP FIRST OR YOUR ENGINE WILL NOT PRODUCE ANY BOOST**

Turbosmart recommends that this function is used in conjunction with another form of Over-boost protection such as fuel/ignition cut or over-boost valve. The over-boost function will not stop an over-boost scenario if there is a mechanical failure on the car that inhibits the e-Boost from controlling the wastegate or if electromagnetic interference due to incorrect wiring causes electrical interference to the e-Boost.

If the **obS** is triggered the e-Boost2 begins to reduce the boost pressure to half of that set in the **obS** parameter. Once this safe pressure is achieved the e-Boost will return to normal operation. **obS** must be set to a level at least 2.2psi (0.15 bar or 15kPa) above the highest boost pressure. When the **obS** is triggered **obS** will flash on the display to indicate that your boost pressure has reached the over boost shut down value. **obS** will continue to flash on the display until the pressure has been reduced to half that set in **obS** and the unit has returned to normal operation. **obS** will flash on the screen when triggered in live mode and when a set point is being edited under boost pressure but not inside the boost or setup menus until they are exited.

The **obS** is factory set to 7 psi (0.48 bar or 48 kPa), so you must enter a figure in order for the e-Boost to produce more than a standard boost pressure. The purpose of this feature is to protect your engine against accidentally entering a boost set point value that is too high, preventing a dangerously high boost pressure. Extreme care should be taken when setting this parameter. Turbosmart recommends that you seek advice from an appropriately qualified technician with regard to the **obS** setting.

Press **MODE** to enter the menu and adjust the values using the **UP** and **DOWN** keys. Press **MODE** again to save the desired setting.

***3) Setting nSP (Number of set points):*** The e-Boost2 is capable of controlling up to 6 individual boost groups. Setting nSP to a value from 1-6 will then enable that number of boost groups (and their associated set point, gate pressure and sensitivity) in the boost menu and live mode. Press **MODE** to enter the menu and adjust the values using the **UP** and **DOWN** keys. Press **MODE** again to save the desired setting.

***4) Setting CYL (Number of Cylinders):*** If you have connected the yellow RPM wire to an RPM signal from your ECU or negative terminal of an ignition coil you will need to input the number of cylinders / rotors in order to configure the

RPM signal correctly i.e. the number of pulses per revolution being picked up from the RPM output of the ECU. The number of cylinders available is between 1 and 16. The RPM input can accept a square wave signal between 3.5 and 12V. Twin rotor and triple rotor engines can be configured as 4 and 6 cylinders respectively. Press **MODE** to enter the menu and adjust the values using the **UP** and **DOWN** keys. Press **MODE** again to save the desired setting.

***5) Setting SCL (Scale):*** The e-Boost2 readout can be configured in either bar, psi or kPa, the default setting is in psi. This allows you to tailor the readout to suit your own preference. Note that when the psi scale is selected and the e-Boost2 is under vacuum conditions the display will read in inches of Mercury (inHg) not negative psi. Press **MODE** to enter the menu and adjust the values using the **UP** and **DOWN** keys. Press **MODE** again to save the desired setting.

***6) Setting bGr (Bar graph):*** The e-Boost2 bar graph can be configured to indicate a pressure between zero and full scale (60 psi). The bar graph has ten segments, seven blue segments and three red segments. When seven segments are illuminated the pressure that has been programmed in this parameter has been reached. The bar graph is factory set to 15 psi. The desired display pressure can be adjusted to your preference and is typically set at your maximum boost level. Press **MODE** to enter the menu and adjust the values using the **UP** and **DOWN** keys. Press **MODE** again to save the desired setting.

7) Hold **MODE** to exit the Setup Menu

8) In Live Mode, press MODE and BOOST/DOWN key to enter the boost menu

9) Firstly we will setup **bG1** (Boost group 1). The parameters that can be adjusted in each boost group are set point (SP#), gate pressure (GP#) and sensitivity (SN#).

## *BOOST SETUP*

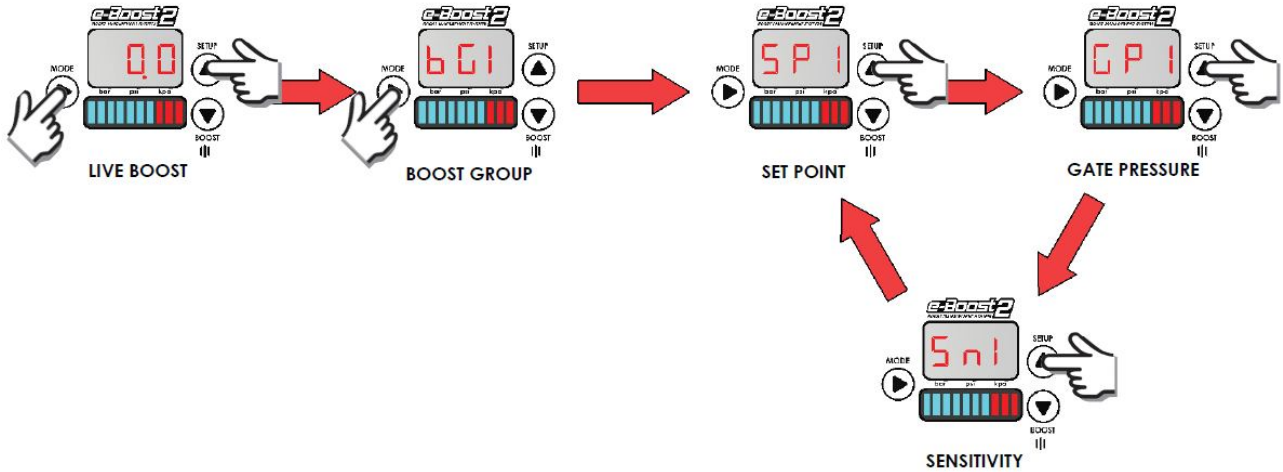


***10) Setting SP1 (Set point):*** The SP value determines the **DUTY CYCLE** the solenoid will operate at when the gate pressure is reached. The SP value is not the amount of boost pressure your turbo will produce. This is a value between 0 – 99. The larger the value, the more boost the turbocharger will produce. Start the setup by increasing the SP value to 20. Bring the car onto boost and see what the maximum boost pressure is. Increase the value in small increments until you achieve your desired boost pressure. The SP value can also be adjusted while the car is on boost however, instead of the SP value being displayed, the boost pressure will be displayed so you know what pressure you are achieving. This is the easiest way to set your set points. Press **MODE** to enter the menu and adjust the values using the **UP** and **DOWN** keys. Press **MODE** again to save the desired setting.

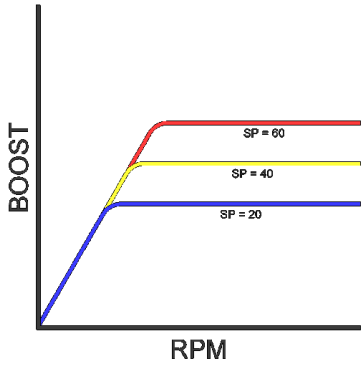

***11) Setting GP1 (Gate pressure):*** This feature helps bring boost on faster at lower rpm and will give an increase in torque. Start by setting the gate pressure 5 PSI below the desired boost pressure with the corresponding SP value e.g. if the desired boost pressure is 15 PSI, set the gate pressure to 10 PSI first and adjust from there. Adjust the value higher to increase the response of the turbocharger or decrease the value to reduce the response. If this setting is too close to target boost, you will get a boost spike. Press **MODE** to enter the menu and adjust the values using the **UP** and **DOWN** keys. Press **MODE** again to save the desired setting.

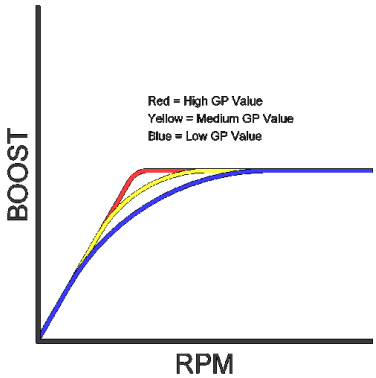


***12) Setting SN1 (Sensitivity):*** The sensitivity is how sensitive the e-Boost2 is to changes in the boost curve. Under normal circumstances the sensitivity is left at the factory set level of 20. If your boost curve is wavy through the rev range, reduce the sensitivity, if your boost curve drops off at the end of the rev range, increase the sensitivity. **Note:** do not increase this value higher than 30. Press **MODE** to enter the menu and adjust the values using the **UP** and **DOWN** keys. Press **MODE** again to save the desired setting.

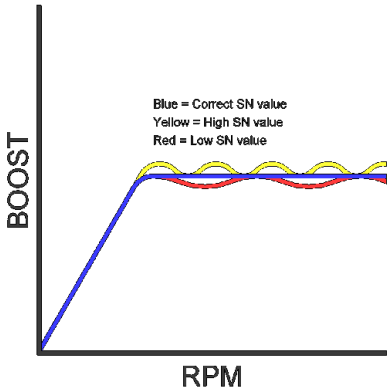


13) Hold **MODE** to exit the Boost Group.

14) Repeat steps 10 – 13 for each Boost Group.

15) Once all Boost Groups are set, Hold **MODE** in the Boost Group menu to enter Live Mode

## *ADVANCED FUNCTIONALITY*

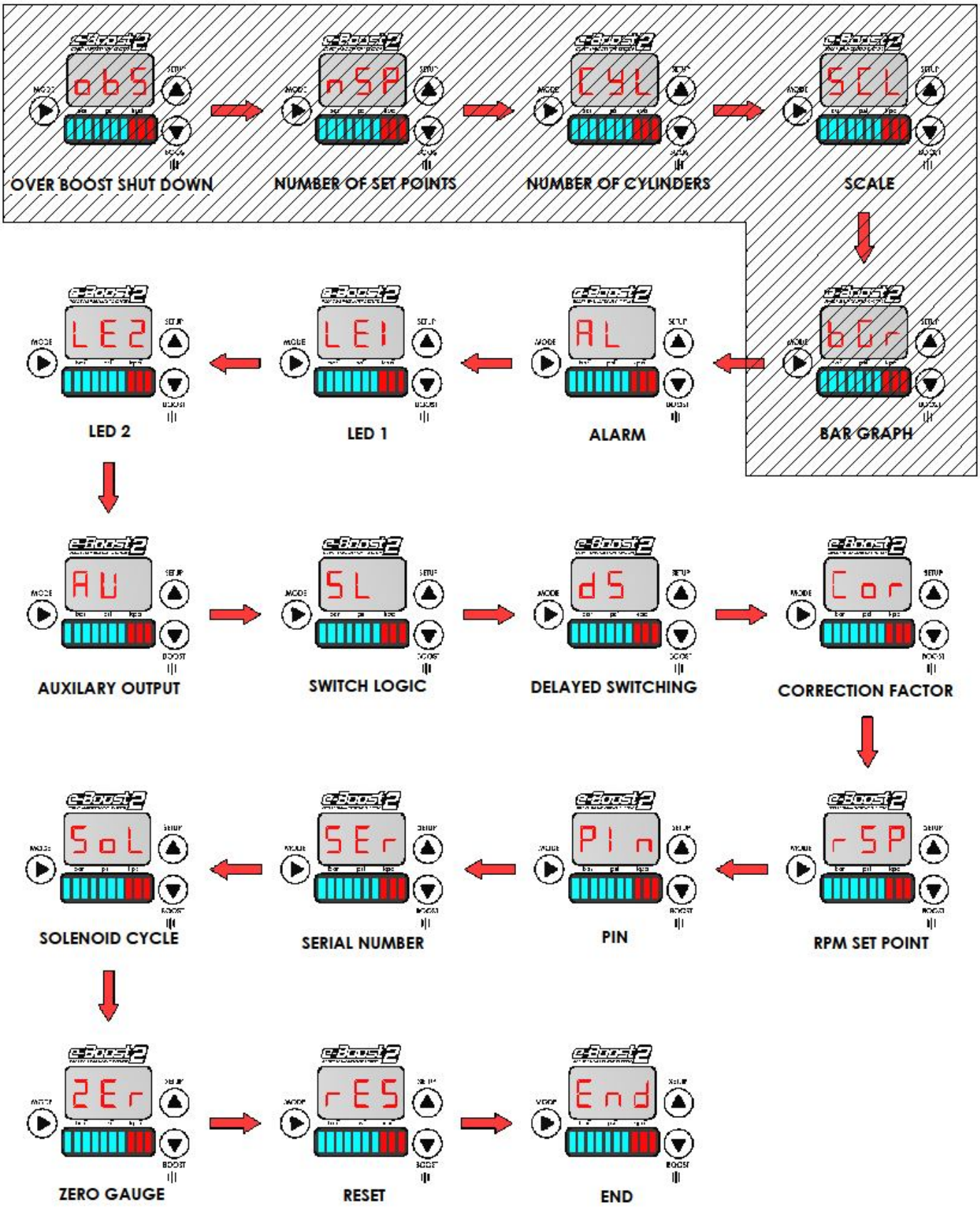

# RPM Signal Connection (OPTIONAL)

RPM signal connection is **ONLY** for Tacho mode, RPM set point mapping, Boost correction, shift light function and other advanced features. Turbosmart recommends your RPM signal be connected by an appropriately qualified technician or automotive electrician. For further information consult your vehicle's manuals or your local automotive electrician. The e-Boost2 is **ONLY** able to accept an RPM signal in the form of a square wave that is switching between 0V and 3.5-12 volts.

The following points should be followed to connect your RPM signal to an ECU pin.

- Locate your ECU RPM signal wire and splice into the signal wire coming from your ECU.
- Check the output you are splicing into is a square wave that is switching between switching between 0V and 3.5-12 volts with an appropriate meter.
- Connect the yellow RPM wire from the e-Boost to the spliced section of the ECU RPM out.
- Turn on the e-Boost2 and configure your signal to the number of cylinders or rotors your engine has using the CYL (cylinder) parameter located in the setup menu.
- In live mode with your engine running press mode once to show live RPM. The display should be reading RPMx100 e.g. 015 on the display indicates 1500 RPM. If the display is not reading correctly re-check the cylinder configuration in the setup menu.
- **Note: If the OEM tachometer does not display RPM after installing the E-Boost 2, a 2 ohm or higher resistor needs to be installed in line between the ECU RPM output pin and the E-Boost 2.**

The following points should be followed to connect your RPM signal to the negative terminal of an ignition coil. NOTE: Caution should be exercised when connecting to the negative terminal of an ignition coil and Turbosmart recommends an ECU connection where possible. IMPORTANT! The RPM signal should not be connected to a coil of a capacitive discharge ignition (CDI) system.

- Check the signal from the negative terminal is a square wave that is switching between switching between 0V and 3.5-12 volts with an appropriate meter. If the voltage is below 3.5V (coil trigger signals tend to have a very low voltage) the e-Boost will not read a signal. In this case, a signal amplifier (also known as a tach adapter) must be used to boost the signal.
- Connect the RPM signal wire from the e-Boost2 to the negative terminal of an ignition coil or tach adapter (which ever method is used).
- Turn on the e-Boost2 and configure your signal to the number of cylinders or rotors your engine has using the CYL (cylinder) parameter located in the setup menu
- In live mode with your engine running press mode once to show live RPM. The display should be reading RPMx100 e.g. 015 on the display indicates 1500 RPM. If the display is not reading correctly re-check the cylinder configuration in the setup menu.

# SL (Switch Logic)


The e-Boost2 is capable of 9 different methods of boost switching.

**IMPORTANT! Before setting up your boost group switching you should know what boost pressure you achieve with each set-point setting in its relevant boost group**. For example if you want to run four different boost levels you should set up four groups and test what each of your boost levels are before setting up switching between each boost group.

**ISP (Internal switching point):** Switching between boost groups is achieved using the **UP** and **DOWN** Keys

**ESP (External switching point):** Up to 4 boost groups can be selected directly by externally grounding or earthing the green and/or orange wires from the e-Boost2 loom to the chassis. The appropriate wire corresponding to the set point you wish to select is shown in the table below.

| Active set point | Green wire | Orange Wire |
|---|---|---|
| Set point 1 | Not connected | Not connected |
| Set point 2 | Earthed | Not connected |
| Set point 3 | Not connected | Earthed |
| Set point 4 | Earthed | Earthed |

**BOD (Boost on demand):** Allows you to select a boost set point for an inputted value of time before returning to the previous set point. When the **BOD** function is activated within the switch logic menu, an additional sub-menu will appear in **bG2** and **bG3** of the boost menu called **bd2** and **bd3**. **bd2** is the value of time in seconds, **bG2** will be selected before returning to the previous set point. **Bd3** is the value of time in seconds, **bG3** will be selected before returning to the previous set point.

- Earthing the green wire will trigger **bG2** for the inputted value of time
- Earthing the orange wire will trigger **bG3** for the inputted value of time
- Maximum time that a boost group can be selected is 99 seconds
- The boost and setup buttons on the e-Boost2 unit will function as normal in **ISP** mode.

**SSA (Sequential switching function A):** Allows you to sequentially switch between different boost settings. This switch logic could be applied in a situation where you want to have a different boost level in each gear.

- Earthing the green wire with a switch will scroll up a single set point.
- Earthing the green wire again will switch up another single set point.
- The maximum number of set points that can be switch up to is determined by **nSP** in the setup menu.
- Once the maximum set point is reached through switching further switching not increase the set point any higher.
- Earthing orange wire with a switch will reset and return to **SP1**.

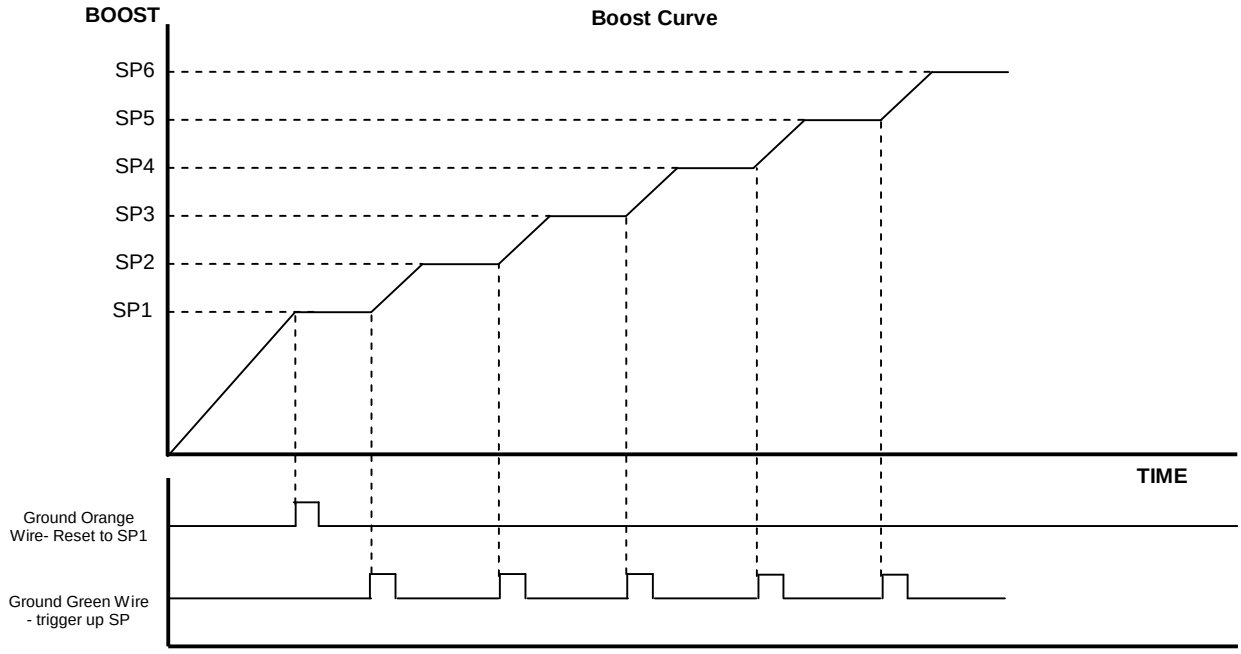


**SSB (Sequential switching function B):** Sequential Switching Function B allows you to sequentially switch up and down between different boost settings using external switches. This switch logic could be applied in a situation where you want to have a different boost levels in each gear.

- Earthing the green wire with a switch will switch up a single set point.
- Earthing the green wire again will switch up another single set point.
- The maximum number of set points that can be switch up to is determined by **nSP** in the setup menu.
- Once the maximum set point is reached through switching (note: will only switch up to **SP6**).
- Earthing orange with a switch will wire switch down a single set point.
- Earthing the orange wire again will down another set point. (note: will only switch down to **SP1**).

## Example Boost

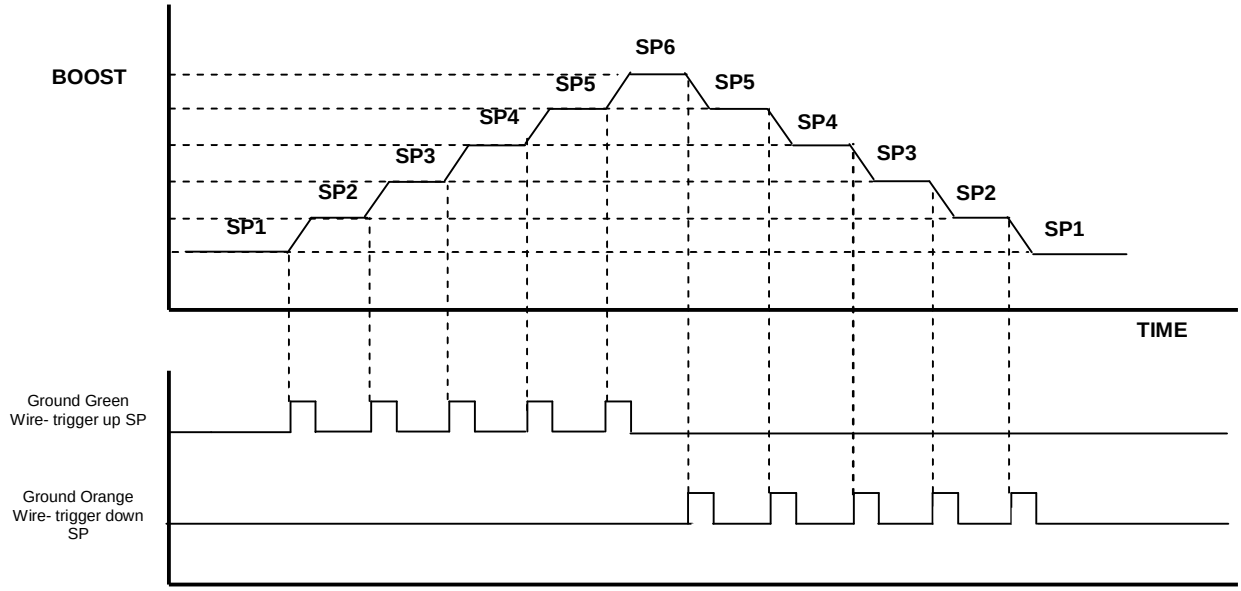

**SSC (Sequential switching function C):** Timed sequential switching function C allows the boost groups/set-points to be active then switched at predetermined time intervals. This switch logic could be applied in a drag racing situation where you want to switch boost levels at known time intervals within your elapsed time (ET).

- With **SSC** active **dS1-dS6** will appear in each boost group.
- These time intervals can be entered as the amount of time you want each set point to be active before switching to the next set point.
- Time delays are in increments of 1/10$^{th}$ of a second, with the maximum allowable being 99 seconds.
- **dS1** will refer to the amount of time **SP1** is active before switching to **SP2**, **dS2** to the amount of time **SP2** is active before switching to **SP3** and so on.
- Earthing the orange wire with a switch will reset the timer and switch to **SP1/BG1**.
- Earthing the green wire will start the timer and the time interval **dS1** during which **SP1** will be active.
- At the end of the time interval **dS1** the unit will switch to **SP2** and **SP2** will be active for the time interval **dS2**.
- The same procedure will happen for all active set points (determined by the **nSP** parameter in the setup menu)
- Once the last time interval has ended the unit will continue to operate at the final set point.
- Note to skip a set point/boost group set the **dS** parameter for that group to equal zero.
- This is a solely time based switching method and is not dependant on switching except for the reset to **SP1** (earthing the orange wire) and a GO (earthing the green wire) which will start the timer.

## Example Boost

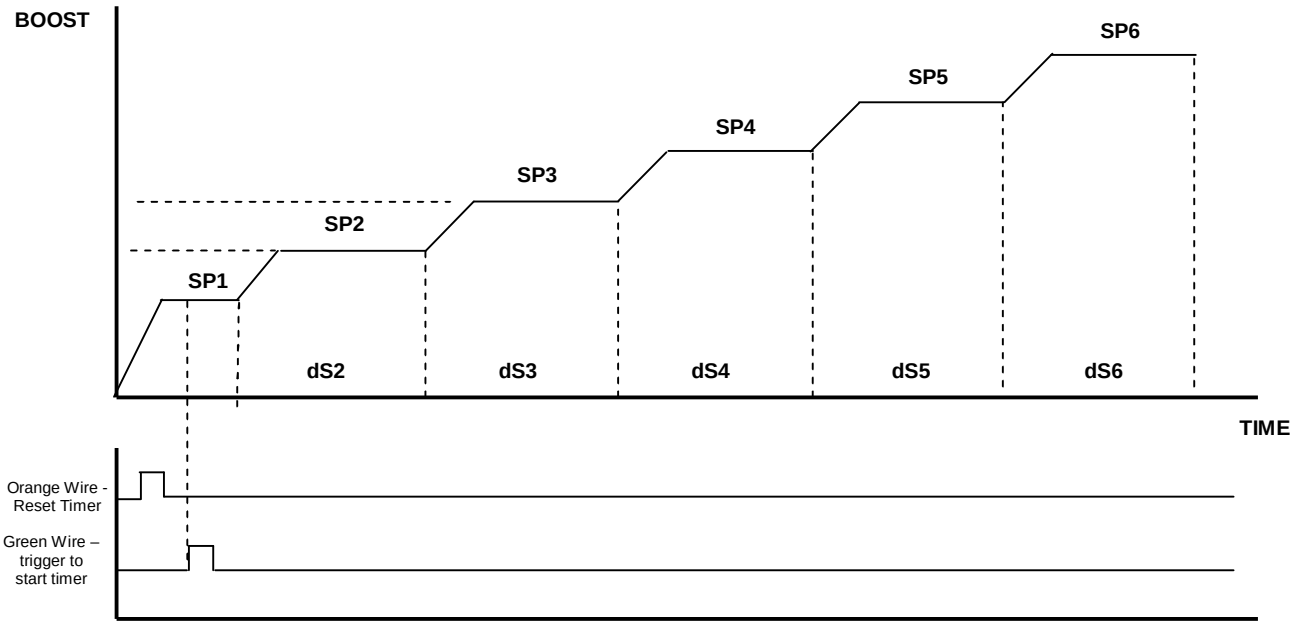

**SSD (Sequential switching function D):** Sequential switching function D is an advanced boost level switching function where you can configure a time delay to give either a drop in boost or a spike between switching boost levels. For example in a drag racing application you may want lower your boost during launch to maintain traction and spike your boost during gear changes to compensate for a drop in RPM.

EXAMPLE 1: BOOST DIPPING BETWEEN BOOST LEVEL SWITCHING

- Earthing the green wire will scroll up through set points starting at SP1 up to SP6 one at a time.
- Earthing the orange wire will reset and return to SP1 and dS1 (launch time delay)
- Activating SSD will display dS1-6 in their respective boost groups.
- These time intervals (dS1-6) can be used to give a dip in boost or spike in boost during the time delay.
- To create a dip in boost set the gate pressure to zero of the boost group that you are switching to. For example to dip the boost in the launch sequence set GP1 to zero as shown on the diagram below and define how long you want the boost to dip for in the time interval parameter dS1. To dip the boost when switching between boost levels eg between SP1 and SP2 set GP2=0 and dS2 equal to the amount of time you want the boost to dip for. The solenoid is in fact turned off during the time delay so the waste gate actuator is seeing manifold pressure. You will need to tune the time delay so that your boost does not drop too far during this time delay.
- dS1 and SP1 will be active after a reset by earthing the orange wire through a switch.
- The first time interval will start once the green wire has been earthed and un-earthed. If this switch is setup on a clutch mounted the launch time delay dS1 will start when the switch is opened again. On a clutch mounted switch this could be when clutch is released for launch.
- After the time delay associated with dS1 has elapsed, SP1 will continue to be active.
- SP2-6/dS2-6 will be triggered when the green wire is earthed through a switch. For example if the time delay is between gear changes the time will start when switch is closed e.g. on clutch mounted switch when clutch is depressed for the gear change.
- During the time delay the solenoid will be off hard (i.e. actuator seeing manifold pressure) if the gate pressure has been set to zero. Once the time delay has elapsed the boost level will switch to the subsequent set point boost level.

**Example Boost Curve - boost dipping**

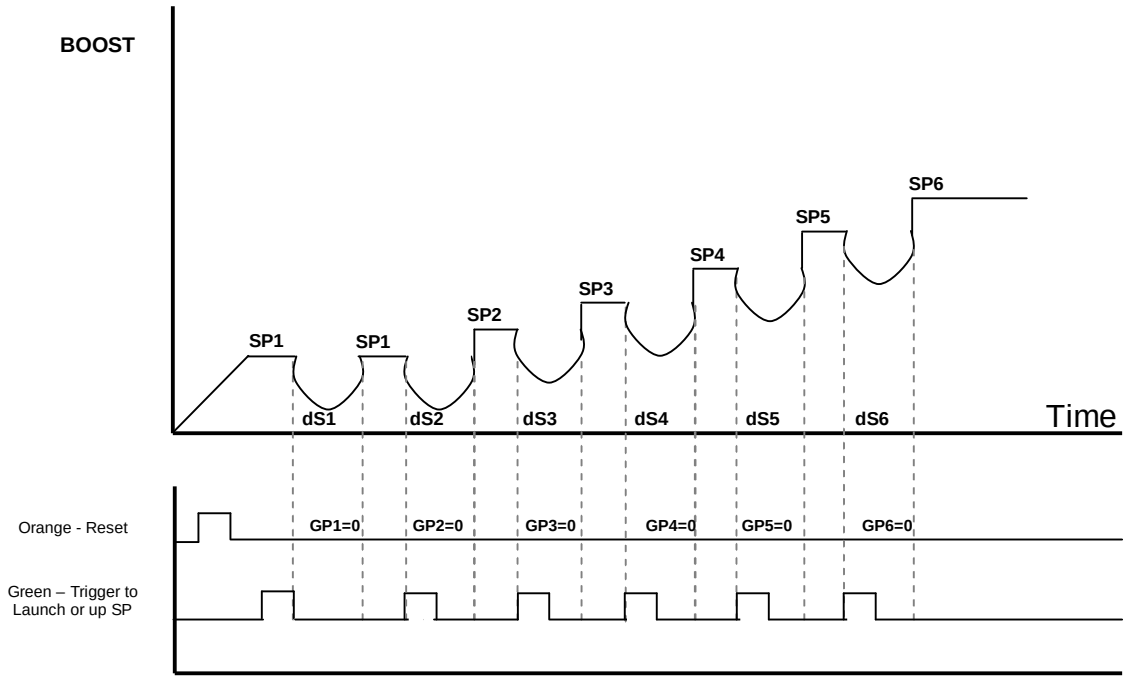

EXAMPLE 2: BOOST SPIKING BETWEEN BOOST LEVEL SWITCHING

- Earthing the green wire will scroll up through set points starting at SP1 up to SP6 one at a time.
- Earthing the orange wire will reset and return to SP1 and dS1 (launch time delay).
- To create a spike in boost during the time delay you must set the gate pressure for the relevant boost level higher than the boost level achieved with the set point. For example if you know that a SP2 value of 40 gives you a boost pressure of 14 psi you can spike your boost pressure to say 17 psi by setting GP2 = 17 psi.
- You must also set the time interval dS during which you want your boost spike.
- If your time interval (dS) expires before your gate pressure spike is reached the boost level will go to the SP boost level.
- If your gate pressure is reached before the time interval dS expires then the time interval will be cut short and the boost level will return to the boost level for the next set point.

**Example Boost Curve - Boost Spiking**

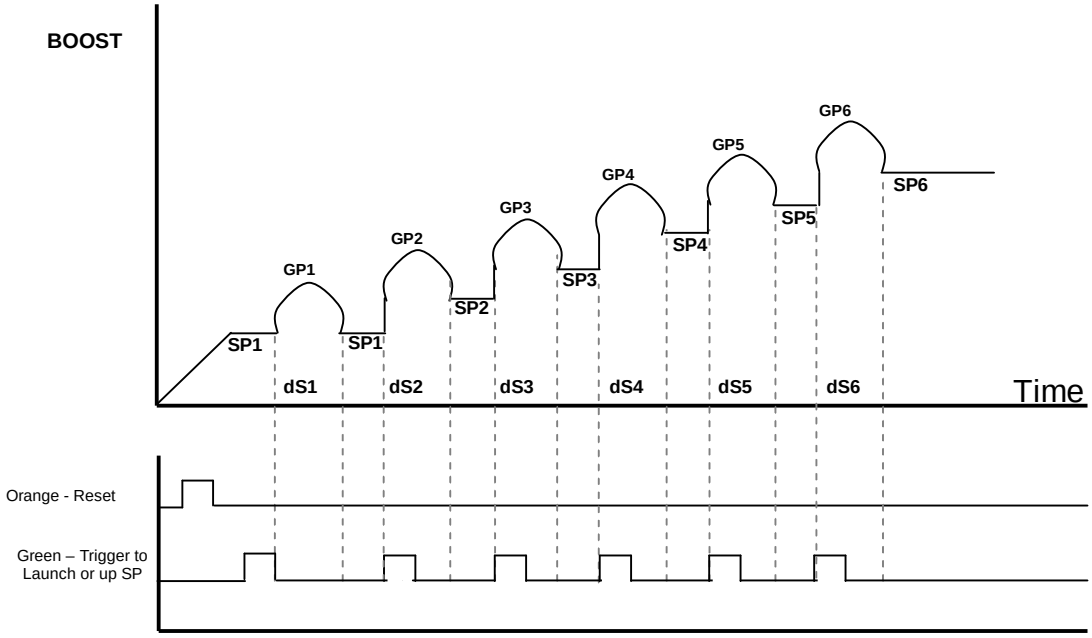


EXAMPLE 3: COMBINATION OF BOOST SPIKING & BOOST DIPPING BETWEEN BOOST LEVEL SWITCHING

- A combination of spikes and dips as shown below can be achieved through entering zero gate pressure where you want a dips and a gate pressure (the max of the spike) where you want a boost spike.

**Combination Curve**

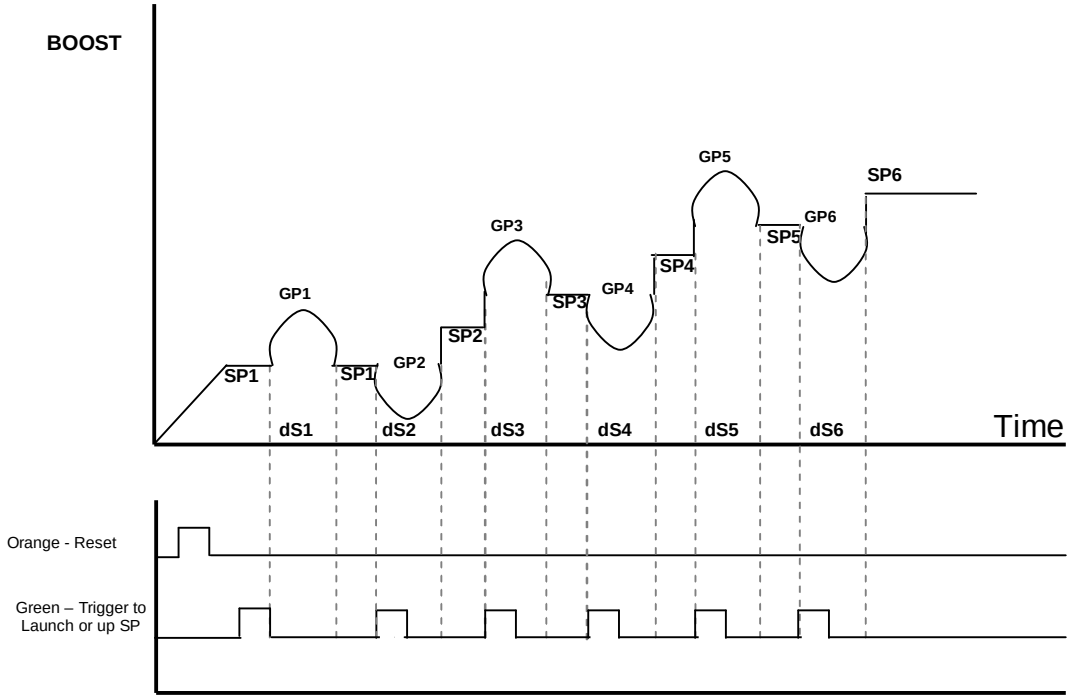

**SSE (Sequential switching function E):** Timed sequential switching function E allows the set-points to be mapped and switched during a predetermined time interval.

- **dS1-6** is the amount of time you wish each boost group to be active for, up to a maximum of 99 seconds. **dS** can be entered in 0.1s increments – 6 seconds = 060
- Only the first 4 seconds of each boost group can be mapped and the last set point value that is mapped will continue to be active for remainder of the time delay (if set longer than 4 seconds).
- The first 4 seconds can be mapped in 0.2 second intervals which means you can have up to 20 mapped set point values within the first 4 seconds of the boost group.
- Entering a value in the **SP** parameter of the boost group will paste this value through all time increments.
- Gate pressure is not available with this function and will no longer be visible in the boost group.
- **dS1** will refer to the amount of time **BG1** is active before switching to **BG2**, **dS2** to the amount of time **BG2** is active before switching to **BG3** and so on.
- This is a solely time based switching method and will not be dependant on switching except for a reset to **SP1** (earthing the orange wire) and a GO (earthing the green wire) which will start the timer.

### Example 1: dS1=4s with 4s map defined

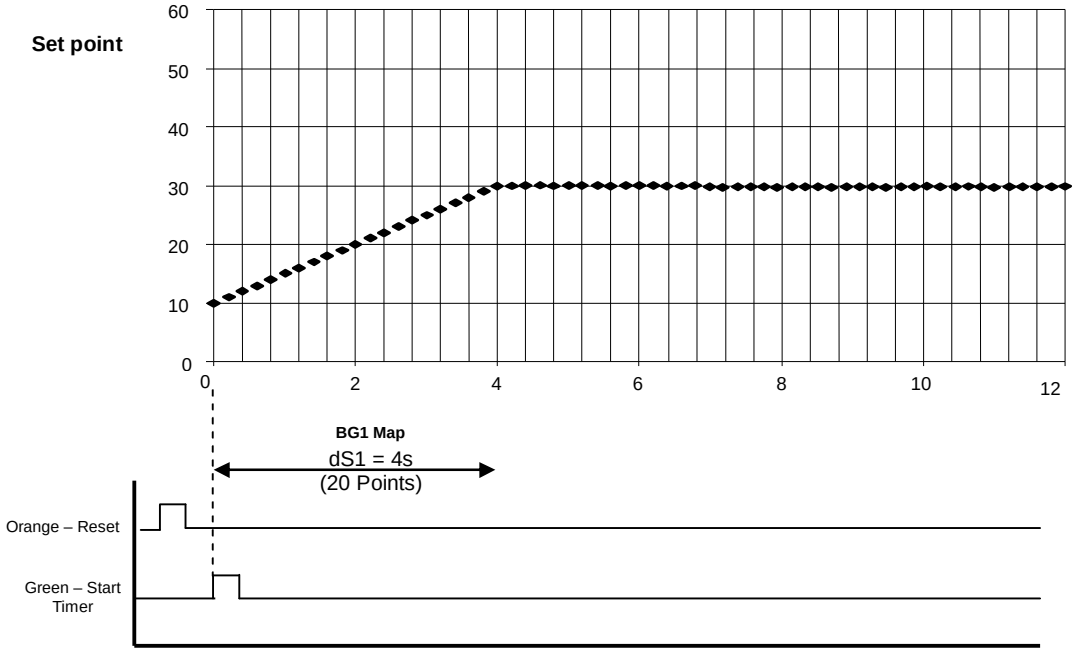


### Example 2: dS1=4s, dS2=4s with 8s map defined

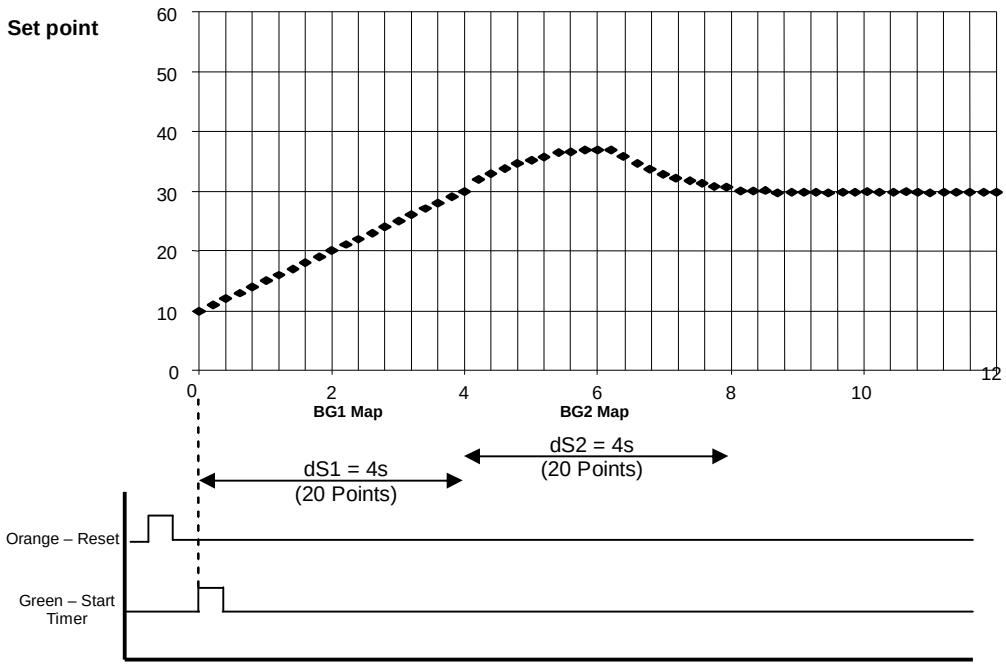


### Example 3: dS1-6=4s – Maximum 24s of full mapping

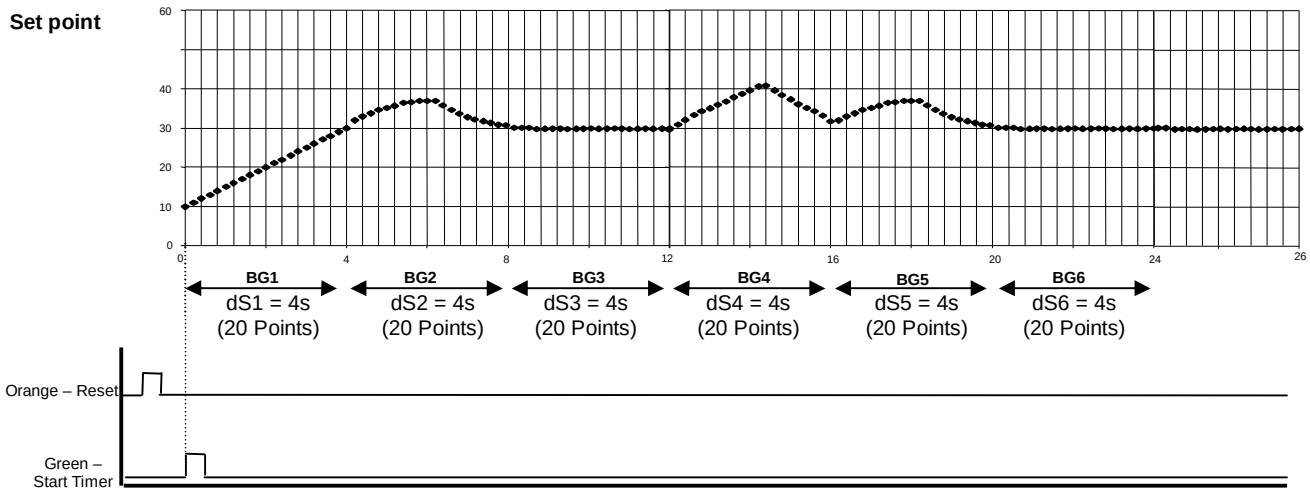


**Example 4: Time delays as shown with mapping for first 4s then remainder of dS on last map point**

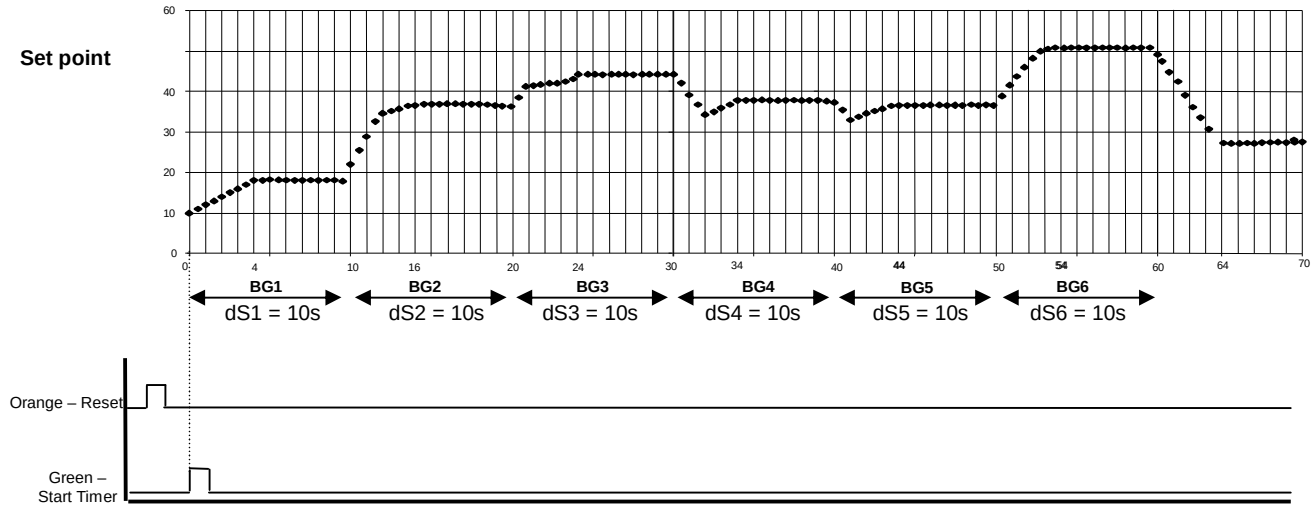

**SSF (Sequential switching function F):** Timed sequential switching function F allows the set point values to gradually increase over time. This switch logic could be applied in a drag racing situation where you want to gradually increase boost levels over a desired time interval within your elapsed time (ET). The Set point value will increase linearly between the user defined set point targets, e.g. If SP1 was 20 and SP2 was 50 and the delayed time was 5 seconds, when the timer is started, it would start at SP1 and over 5 seconds, gradually ramp up to SP2

- With **SSF** active **dS1-dS6** will appear in each boost group.
- These time intervals can be entered as the amount of time you want each set point to be active before switching to the next set point.
- Time delays are in increments of 1/10$^{th}$ of a second, with the maximum allowable being 99 seconds.
- **dS1** refers to the amount of time that it will take **SP1** to gradually increase to **SP2**, **dS2** refers to the amount of time that it will take **SP2** to gradually increase to **SP3** and so on.
- Earthing the orange wire with a switch will reset the timer and switch to **SP1/BG1**.
- Earthing the green wire will start the timer at SP1
- The same procedure will happen for all active set points (determined by the **nSP** parameter in the setup menu)
- Once the last time interval has ended the unit will continue to operate at the final set point.
- To skip a set point/boost group, set the **dS** parameter for that group to zero.
- This is a solely time based switching method and is not dependant on switching except for the reset to **SP1** (earthing the orange wire) and a GO (earthing the green wire) which will start the timer.

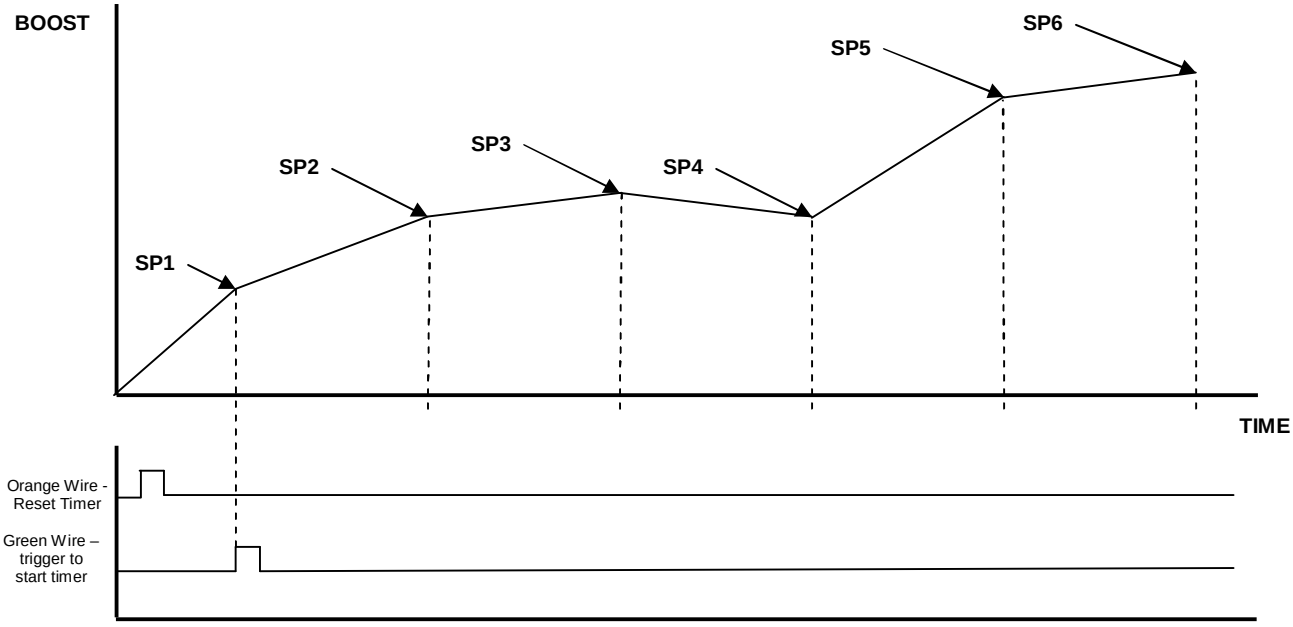

## *AU (Auxilary output)*


The e-Boost2 has an auxiliary output function designed to control an auxiliary device once a certain boost pressure or RPM value is reached i.e. water spray, water injection, warning light or nitrous controller. This circuit can be used to control a **resistor type automotive relay** with a maximum current draw of 2 amps.
There are four options **bOn**, **bOF**, **rOn** and **rOF**. The boost setting on (**bOn**) and off (**bOF**) value will be entered in the units that are currently selected for display. Between the **bOn** and **bOF** values the auxiliary output circuit will be closed and therefore will switch the relay on.

The RPM setting on (**rOn**), and off (**rOF**) are entered as RPM x 100 e.g. if 5000 RPM is the desired setting the user will input 050. Between the **rOn** and **rOF** values the auxiliary output circuit will be closed.

If the **bOF** or **rOF** is set to zero there will be no off and the circuit will remain closed until boost or RPM drops below the **rOn** or **bOn** value. If using a boost setting only to switch the relay the RPM parameter values should be set to zero to turn off or vice versa.

If using the auxiliary circuit as a nitrous controller, you can enter all four user definable parameters **bOn**, **bOF**, **rOn**, and **rOF**. The auxiliary circuit will be closed when boost and RPM fall with the window created by these four parameters. That is when boost pressure is between **bOn** and **bOF AND** when RPM is between **rOn** and **rOF**.

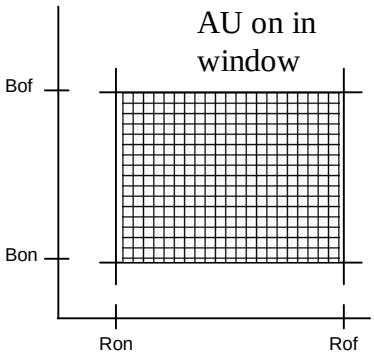


## *LE1/LE2 Shift/warning lights (LED 1/LED 2)*


The e-boost2 has 2 LED outputs that can be used as shift lights or boost level warning lights. These LED outputs can be configured to turn on and off at any boost pressure or engine RPM. Within the LE1/LE2 menus there are 5 parameters **bOn** (Boost pressure on), **bOF** (Boost pressure off), **rOn** (RPM on), **rOF** (RPM off) and **rFL** (RPM flashing).

Between the on and off values the LED will be illuminated. If the **bOF** or **rOF** is set to zero there will be no off and the LED will remain illuminated until boost or RPM drops below the **bOn** or **rOn** value.

You can also set a flashing warning RPM value **rFL** (RPM flashing) at which the led will flash until **rOn** is reached. Once **rOn** is reached the LED will turn on solid. **rFL** must be set to an RPM less than **rOn**. Setting **rFL** to zero will disable the flashing output.

Boost values are entered in the units currently selected for boost pressure display. RPM values are entered as RPM x 100 e.g. if 5000 RPM is the desired setting then input 050. If using a boost setting, RPM values should be set to zero to turn them off. If using a RPM setting the boost parameters should be set to zero to turn them off.

The four wires associated with these two outputs are wired into a 4 pin plug located beside the main harness 8 pin plug. A single or double LED accessory kit is available from Turbosmart that plugs directly into the eboost2 LED output with no additional wiring necessary.

If **rOn**, **rOF**, **bOn** and **bOF** values are entered on 1 LED, the LED will illuminate only when the RPM set points have been reached. The boost values are redundant.

## *AL (Audible alarm)*


The e-Boost2 has an audible alarm function that sounds the internal buzzer once a certain boost pressure or RPM is achieved. The audible alarm is factory set to 15 psi (1 bar or 100 kPa) but can be programmed for any boost pressure or RPM. Within the **AL** parameter there are four options **bOn**, **bOF**, **rOn** and **rOF**.

The boost setting on (**bOn**) and off (**bOF**) values are entered in the units that are currently selected for display. Between the **bOn** and **bOF** values the buzzer will be activated.

The RPM setting on (**rOn**), and off (**rOF**) are entered as RPM x 100 e.g. if 5000 RPM is the desired setting then input 050. Between the **rOn** and **rOF** values the buzzer circuit will be closed.

If the **bOF** or **rOF** is set to zero there will be no off and the buzzer circuit will remain closed until boost or RPM drops below the **rOn** or **bOn** value. If using a boost setting RPM values should be set to zero to turn off or visa versa. Setting these parameters to zero will disable them as parameters.

If **rOn**, **rOF**, **bO**n and **bOF** values are entered, the alarm will sound when either the boost or the RPM value is reached and will turn off when the boost or RPM drops below the set point or both values reach there respective **bOF** and **rOF** values.

## *dS (Delayed switching)*


This function is for use with set point switch logics **ISP/ESP/SSA/SSB** and is designed to create a delay between set point switching and activation. The time delay will be between when a subsequent set point is switched and when it actually changes i.e. the current set point will continue functioning until the time delay has elapsed. **dS1** in boost group 1 applies to the time delay when switching to **SP1**, **dS2** in boost group 2 applies to the time delay when switching to **SP2** and so on. To use time delay between set point switching and activation, **dS** must be ON. In the SETUP Parameter Menu you can activate or de-activate this function. If this function is de-activated all menus relating to the time delay are hidden from the Boost Menu i.e. **dS1** – **dS6** in respective boost group. Once **dS** is activated in the SETUP Parameter Menu, you can enter the delay time in the Boost Group.

Note: Activating **SSC/SSD** and **SSE** also brings up the **dS** parameter in the boost group. Refer to section 5.6 for further details on the set point switching logic and what this parameter applies to.

## *COr (Boost correction)*


This function is use to reduce or eliminate boost drop off at high RPM. Switching this function on will display the boost correction menu in the boost group menu. This function is best performed on a chassis dyno where the graph of the boost curve can be displayed and accurately interpreted.

The boost correction function requires 3 parameters to work; the START RPM, the END RPM and the correction factor.

START RPM (**RP1**): This is the engine RPM at which boost begins to drop off.

END RPM (**RP2**): This is the engine RPM at which you want to turn off the boost correction function, normally set at redline.

Correction factor (**FAC**): The percentage at which boost is dropping off between the START and END RPM.

Example:

The following boost curve shows that between 5000 and 7000 RPM, the boost drops off from 15 PSI to 10 PSI.

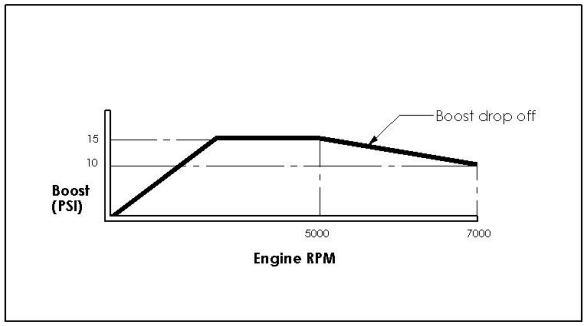


**Boost curve before COR is setup**

To reduce or eliminate this boost drop off, you need to input the following values:

**RP1** = 050 (5000 RPM)

**RP2** = 070 (7000 RPM)

**FAC** = 100 - [(10 ÷ 15) X 100] = 33

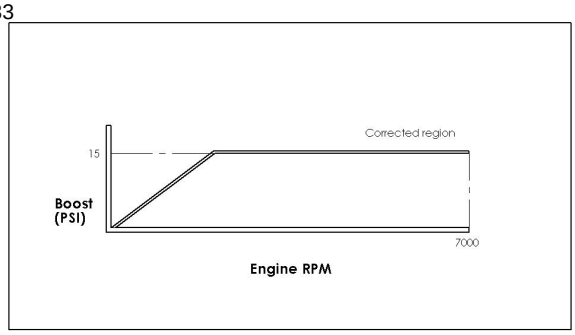


**Boost curve after COR is setup**

## *rSP (RPM based set point mapping)*

This function allows you to map your boost curve against RPM. You can enter set point (**SP**) values against RPM values so you can tailor you boost curve. The RPM values are mapped in increments of 500 or 1000 RPM depending of the maximum RPM selected. RPM is displayed on the readout as RPM x100 eg 005 (5 x 100RPM) is 500 RPM.
At each increment the desired offset which in turn gives you a boost pressure can be defined. When this function is turned on the RPM points 005, 010, 015, 020 through to 190, 195, 200 will appear in each boost group. Entering a value in the Boost Set Point (**SP**) parameter of the boost group will paste that value through all RPM points. This gives a starting point to adjust from.

When activating this function 3 options are available **off**, **10** and **20**. Selecting 100 will give a max RPM of 10000 with 500 RPM increments and selecting 200 will give a max RPM of 20000 and 1000 RPM increments. You could use this function to smooth out dips in your normal boost curve at certain RPM by enter higher set point values for these RPM.
Note this function is available for use with **ISP**, **ESP** and **SSA-SSC**. This function is cannot be turned on if **SSD** or **SSE** is on and if **SSD** or **SSE** is activated with **rSP** already then **rSP** will be turned off. **RSP** also cannot be used at the same time as **COR** (turning **rSP** on with **COR** already on will turn off **COR**).Gate pressure can be used with this function

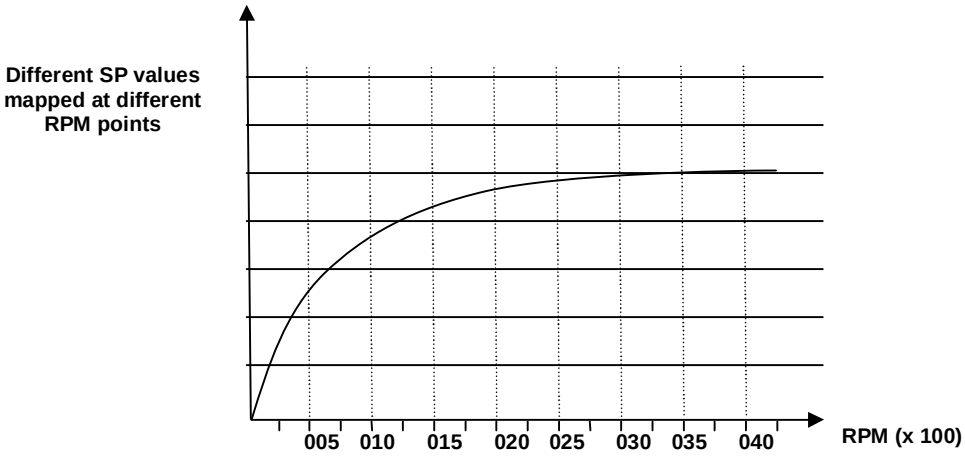


## *Pin (Security Pin number)*

The user or workshop can set a 3 digit password that will lock the boost menu, **obS**, **SL**, **rSP**, **COR**, **dS**, **nSP**, and **CYL** parameters for editing. The default code is 000 set from the factory. If the code has not been changed then the unit will be fully accessible and everything will be available for editing. As soon a different value is entered under the **PIn** parameter in the setup menu this will be the new password.
Once a password has been set under PIN in the setup menu pressing mode and down to access the boost menu will bring up a 3 digit prompt (triple zeros) where a PIN must be entered correctly to enter the boost group and unlock the unit.
Once a password has been configured the **obS**, **CYL**, **SL**, **rSP**, **COR**, **dS**, **nSP**, in the setup menu will be masked and not available for editing. To unmask these parameters go to the **PIn** parameter and enter the current password to unlock the setup parameters for editing. Alternatively enter the correct PIN in the boost group prompt and the entire unit will be unlocked until the PIN is re-entered in the PIN parameter to re-lock the unit.
Applying the factory reset will reset the code and reset all stored values to the factory defaults. This function enables workshops or tuners to lock their setup against tampering. Returning the PIN to 000 will de-activate the password protection.

## *Ser (Serial Number)*

The serial number of your e-Boost2 unit can be displayed on the screen. This can be useful for technical support. The number will scroll through 6 numbers.

## *Sol (Solenoid Cycle)*

This function is used to check whether the solenoid is properly connected to the head unit. Selecting this function will cause the solenoid to cycle (click) 4 times.

## *ZEr (Gauge Zero)*

The e-Boost2 is factory calibrated to read zero at standard atmospheric pressure and temperature. The e-Boost2 is altitude compensated however a large change in temperature can cause the display to read slightly above or below zero even when there is zero pressure applied to the e-Boost2. This function allows you to re-zero the e-Boost2 display. **IMPORTANT! Before using the zero function ensure there is no boost or vacuum pressure or trapped pressure in the e-boost hose before re-calibration.**

## *rES (Reset)*

This function performs a factory reset and returns all the settings back to factory default.

# VEHICLE WIRING DIAGRAMS

Following are vehicle specific ECU wiring diagrams for connecting the yellow RPM signal wire. Turbosmart recommends consulting an appropriately qualified technician for this installation. Be sure to count the number of pins and securely connect the yellow RPM wire to the appropriate ECU wire. Be sure to cover any exposed connections with electrical tape.

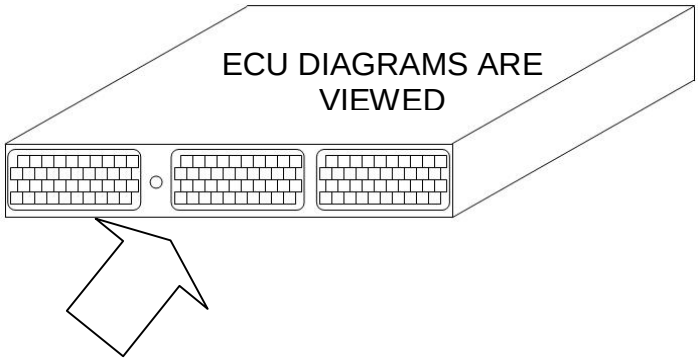


Each diagram has the ECU locations specified by the key and diagram below.

| | | |
|---|---|---|
| **A** Passenger Side Lower Dash | **F** Under the driver seat | **K** Right of the centre console |
| **B** Left of the glove box | **G** Under the passenger seat | **L** Engine bay |
| **C** Passenger Side foot rest | **H** Near the steering column | **M** Front side of the boot |
| **D** Behind the glove box | **I** Right of the meter panel | **N** Back of the driver seat |
| **E** Behind the centre console | **J** Driver side lower dash | |

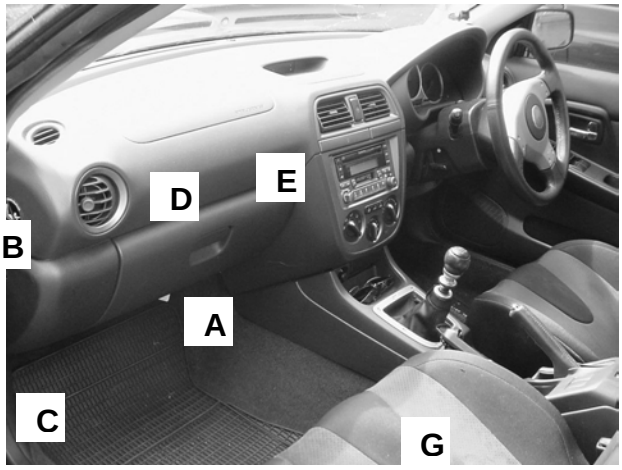


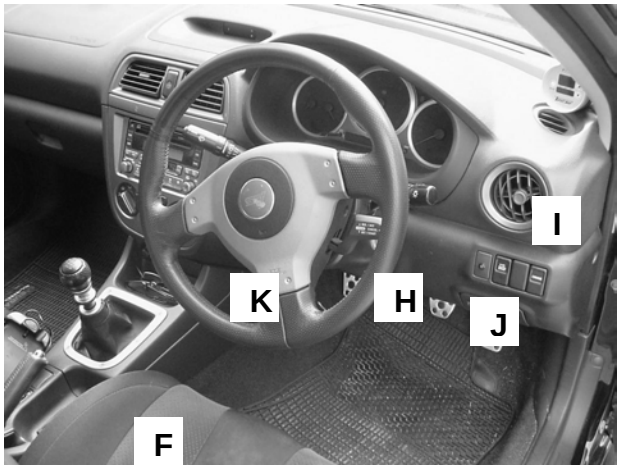

**TOYOTA SOARER JZZ30 1JZ-GTE 91.5 ~ ONWARDS** **ECU location: C**

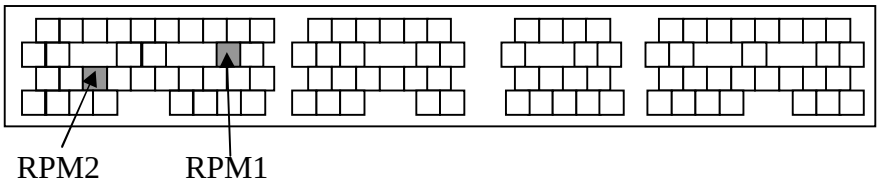


---

**TOYOTA SUPRA JZA80 – 2JZ-GTE** **ECU location: C**

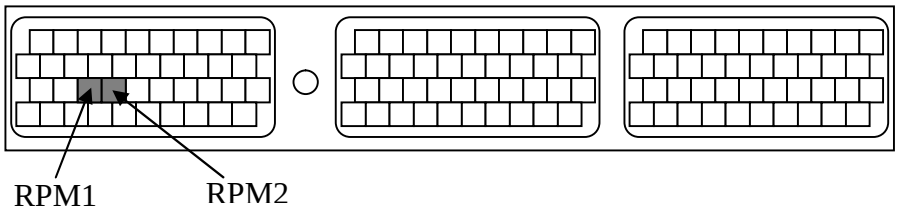


---

**TOYOTA SUPRA JZA80 – 2JZ-GTE M/T ONLY** **ECU location: C**

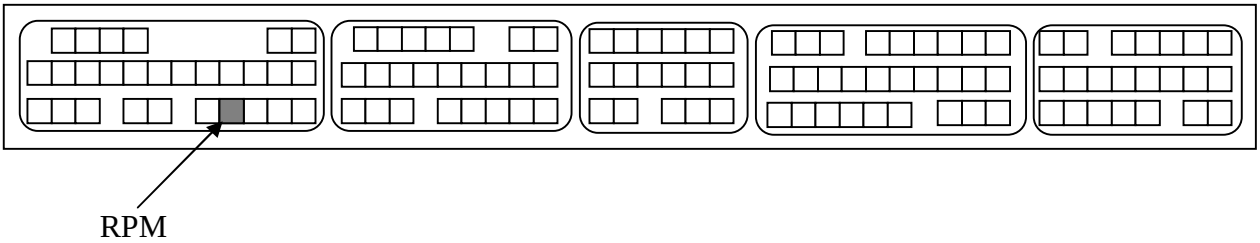


---

**NISSAN 300ZX Z32 VG30DETT 89.7 ~ ONWARDS**
**NISSAN SKYLINE R33 RB25DET 93.8 ~ 95.12**
**NISSAN SKYLINE R32 RB20DET 89.5 ~ 93.7**
**NISSAN 200SX S14 SR20DET 93.10 ~ 96.5**
**NISSAN SILVIA S13 CA18DET 88.5 ~ 91.1**
**NISSAN 180SX RS13 CA18DET 89.3 ~ 90.12**

**ECU location: A**

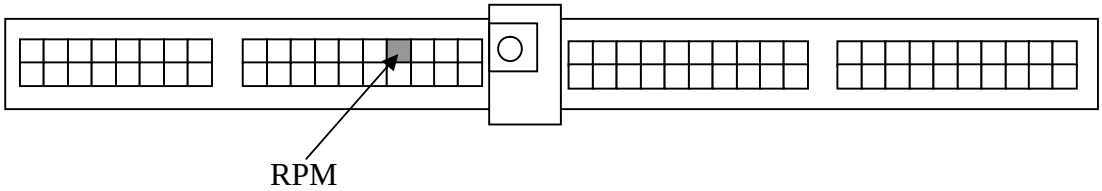


---

**NISSAN SKYLINE R34 RB26DETT 99.1 ~ ONWARDS**
**NISSAN SKYLINE R33 RB26DETT 95.1 ~ 98.12**
**NISSAN SKYLINE R32 RB26DETT 89.8 ~ 94.12**

**ECU location: A**

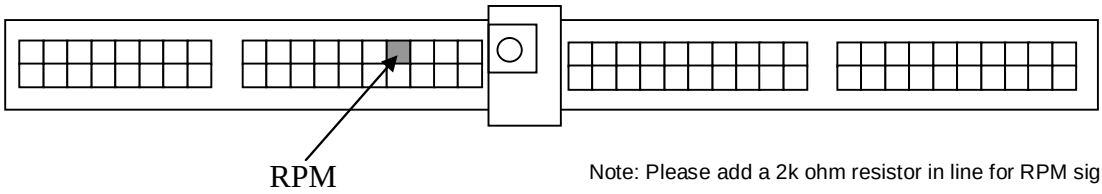


Note: Please add a 2k ohm resistor in line for RPM signal

**NISSAN SKYLINE R34 RB25DET 98.5 ~ ONWARDS** **ECU location: A**

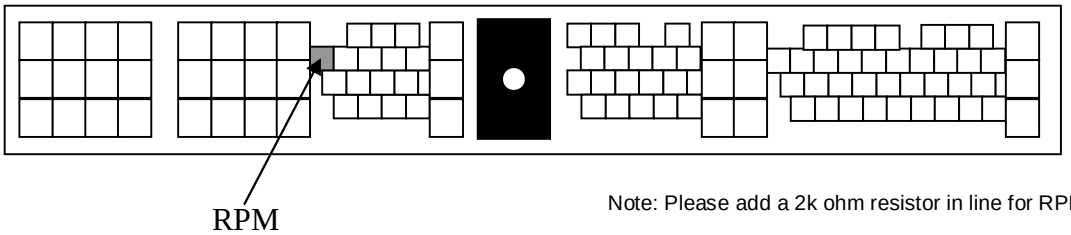


Note: Please add a 2k ohm resistor in line for RPM signal

---

**NISSAN SKYLINE R33 RB25DET 96.1 ~ 98.4** **ECU location: A**

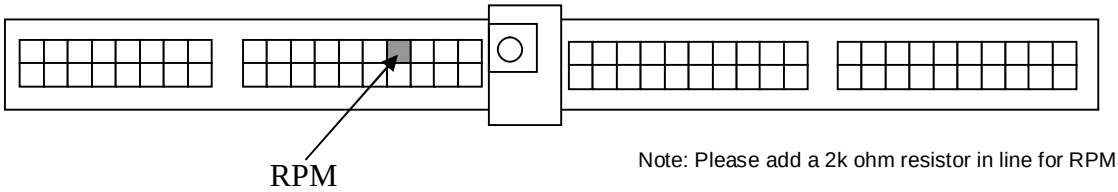


Note: Please add a 2k ohm resistor in line for RPM signal

---

**NISSAN SKYLINE R31 RB20ET 87.8 ~ 89.5** **ECU location: A**

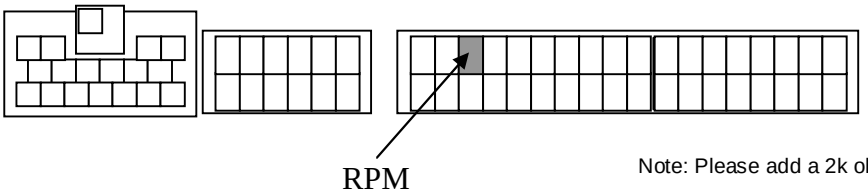


Note: Please add a 2k ohm resistor in line for RPM signal

---

**NISSAN SILVIA S15 SR20DET 99.1 ~ ONWARDS** **ECU location: A**
**NISSAN SILVIA S14 SR20DET 96.6 ~ 98.12**
**NIISAN PULSAR GTIR N14 SR20DET 90.8 ~94.12** **ECU location: E**

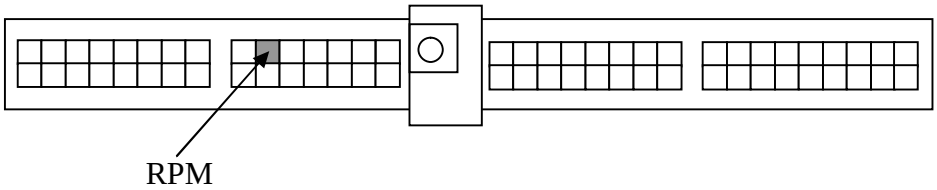


---

**NISSAN SILVIA PS13 SR20DET 91.1 ~ 93.9** **ECU location: A**
**NISSAN 180SX RPS13 SR20DET 91.1 ~ 96.7**

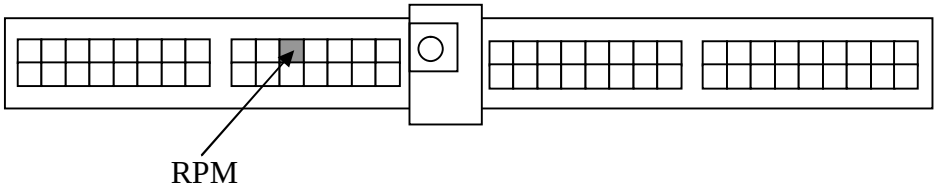

**NISSAN 180SX RPS13 SR20DET 96.8 ~ 98.12** **ECU location: A**

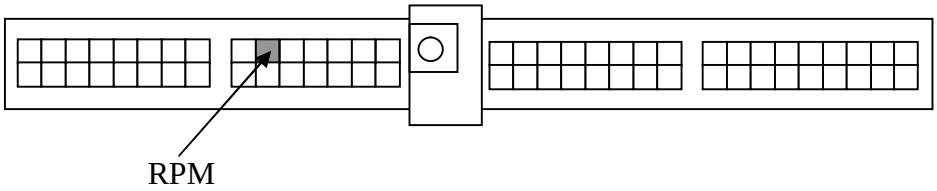


---

**MITSUBISHI GTO Z16A 6G72 90.10 ~ ONWARDS** **ECU location: E**
**MITSUBISHI LANCER CE9A 4G63 93.10 ~96.7** **ECU location: B**
**& CD9A 4G63 92.10 ~ 93.9**

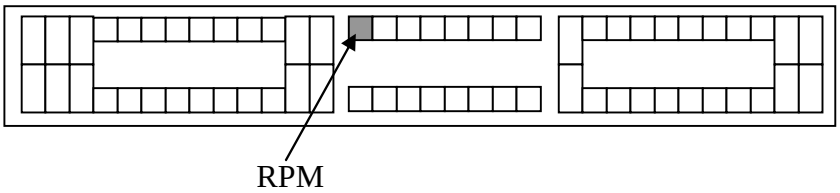


---

**MITSUBISHI ECLIPSE D32A 4G63 95.6 ~ ONWARDS** **ECU location: E**
**MITSUBISHI LANCER CP9A 4G63 99.1 ~ ONWARDS** **ECU location: B**
**MITSUBISHI LANCER CP9A 4G63 98.1 ~ 98.12**
**MITSUBISHI LANCER CN9A 4G63 96.8 ~ 97.12**

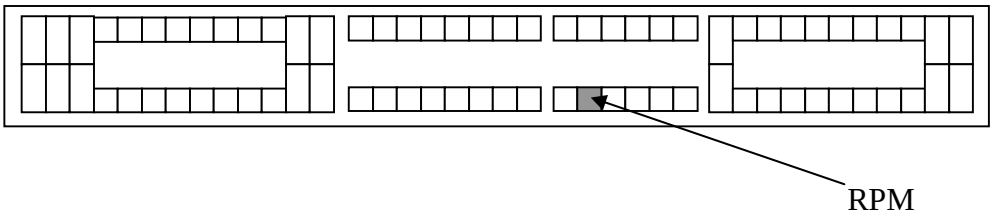


**Note:** For your rpm signal to work correctly with this ECU you may need to place a 3.3K ohm ¼ watt resistor (Colour code: orange, orange, orange, gold) in series with the yellow rpm input wire before connecting to the ECU.

---

**MITSUBISHI ECLIPSE D27A 4G63 89.11 ~ 95.6** **ECU location: E**

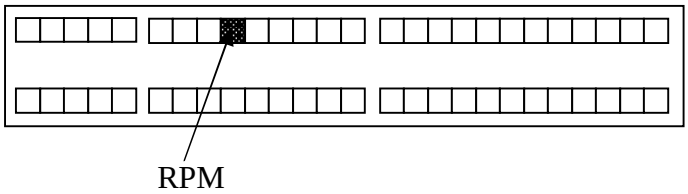


---

**MAZDA RX-7 FC3S 13B 88.9 ~91.11** **ECU location: C**

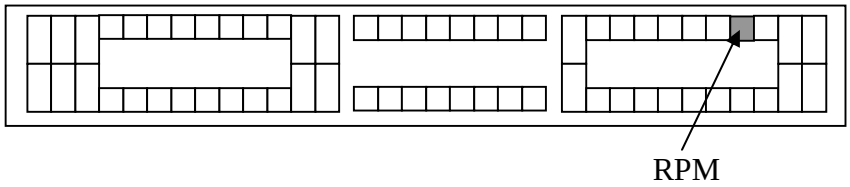

**MAZDA RX-7 FD3S 13B-REW 91.12 ~95.11** **ECU location: A**

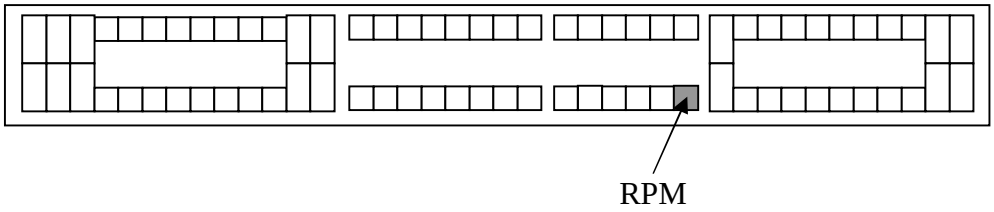


---

**MAZDA RX-7 FD3S 13B-REW 95.12 ~ONWARDS** **ECU location: A**

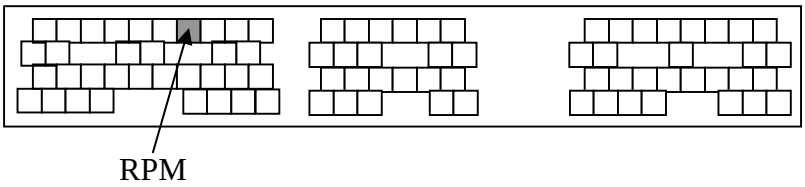


---

**MAZDA RX-7 FC3S 13B 85.19 ~88.8** **ECU location: C**

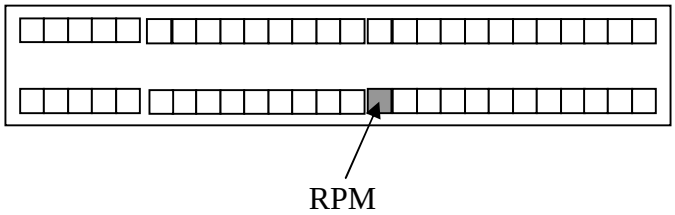


---

**SUBARU LEGACY BC5 & BF5 EJ20G 89.2 ~ 93.9** **ECU location: H**

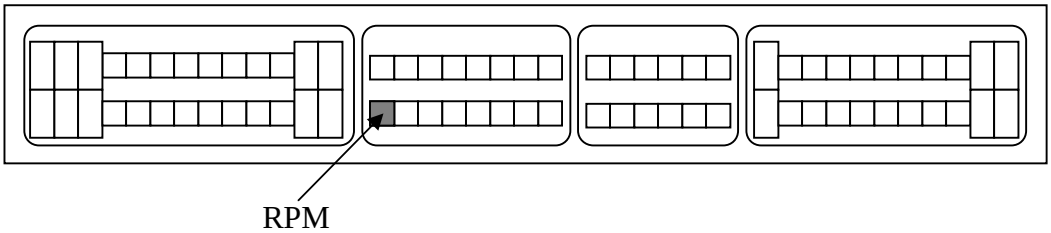


---

**SUBARU IMPREZA GC8 EJ207 & GF8 EJ205 98.9 ~ ONWARDS** **ECU location: C**

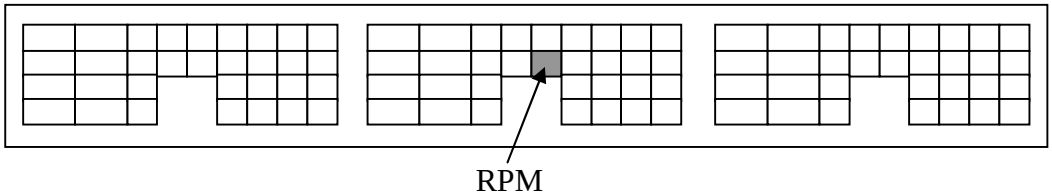


**Note:** For your signal to work correctly with this ECU you will need to place a 2K ohm ¼ watt resistor (Colour code: red, black, red, gold) in series with the yellow rpm input wire before connecting to the ECU.

**SUBARU IMPREZA GC8 & GF8 EJ20K 96.9 ~ 98.8** **ECU location: C**

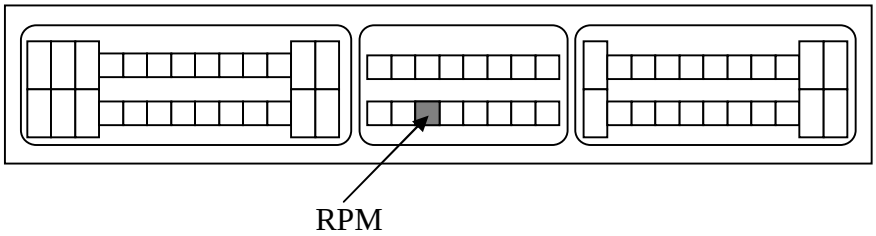


---

**SUBARU LEGACY BD5 & BG5 EJ20H 93.10 ~ 96.5** **ECU location: C**

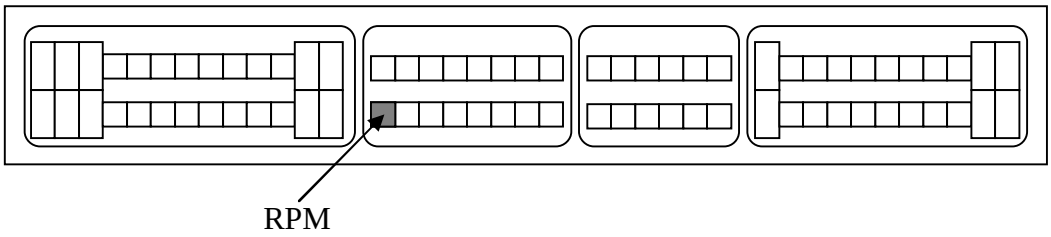


---

**SUBARU LEGACY BD5 & BG5 EJ20H A/T 96.6 ~ 98.5** **ECU location: C**

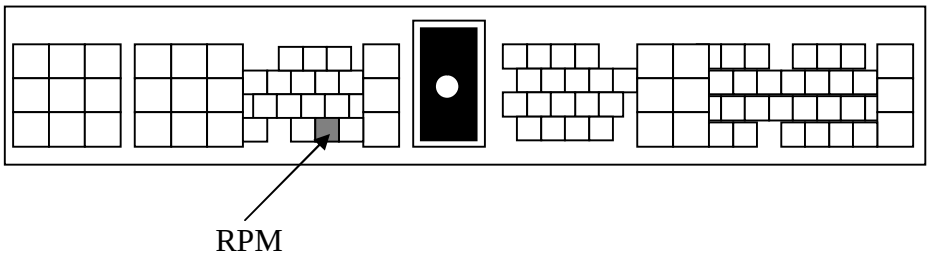


---

**SUBARU IMPREZA WRX 2002** **ECU location: C**

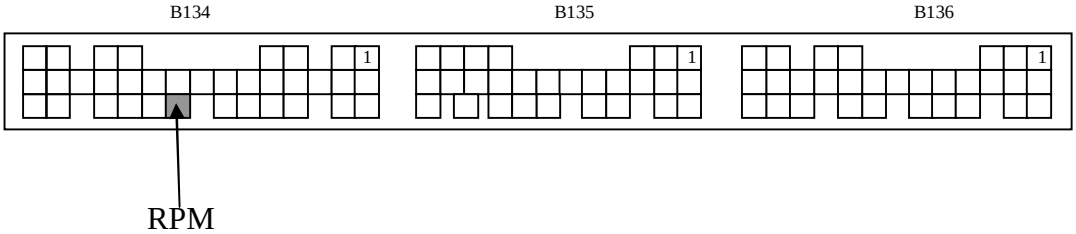


---

**SUBARU LIBERTY B4** **ECU location: C**

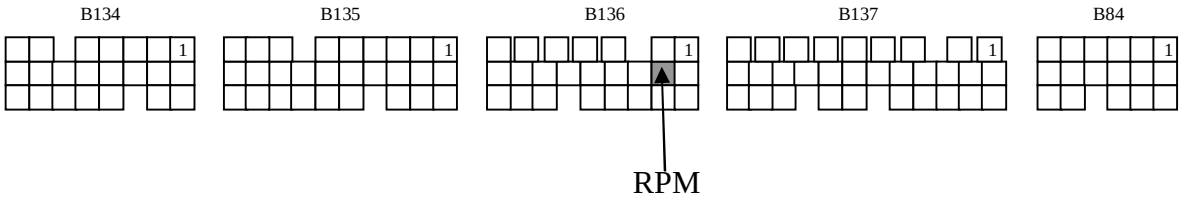

**SUBARU STI 01 - 02** **ECU location: C**

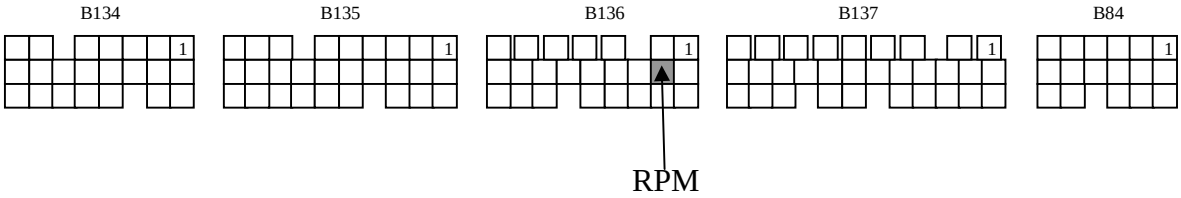


**SUBARU STI 03 - 04** **ECU location: C**

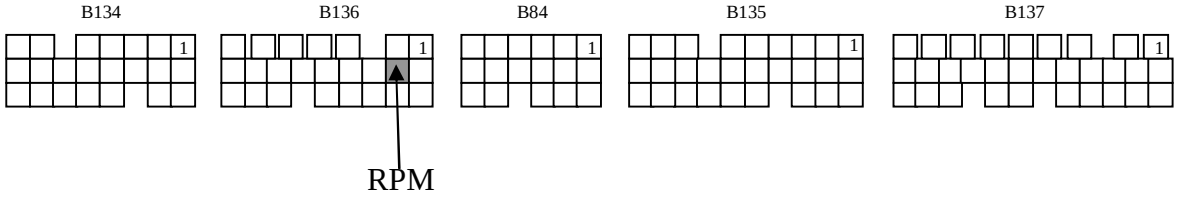


# TROUBLESHOOTING

The following points should be checked if you find that your engine is over-boosting, under-boosting or the boost pressure is fluctuating erratically. Please note the following checks will cure 99% of problems experienced when fitting a Turbosmart e-Boost2.

- Check that the e-Boost solenoid is installed correctly.
- Ensure the factory boost control solenoid is not connected in the hose between the pressure source and the waste gate actuator
- Ensure the length of the waste gate actuator rod has not been modified, refer to the manufactures specifications
- Check to see if the e-Boost solenoid is not blocked or contaminated with dirt, oil build up or debris
- Check the joining hoses for splits, cracks or loose connections and ensure they are not blocked, kinked or restricted, particularly if the existing hose was reused
- Pressure test the waste gate actuator for leakage, the diaphragm or housing may be cracked or split
- Ensure the smooth and free operation of the waste gate arm in the turbo exhaust housing.
- Check that the hose between the e-Boost and the inlet manifold is not obstructed, broken or kinked.
- Check that the OBS is set higher than the boost pressure you are aiming for.
- Check the Blow-off Valve for leakage, some are used as over-boost valves
- Gate pressure maybe set too close to your actual boost pressure
- Ensure correct sensitivity setting.
- Use the Solenoid check function to determine whether the solenoid is electrically connected to the head unit.

# The Turbosmart Pledge

## TURBOSMART
## ONE YEAR LIMITED WARRANTY

Turbosmart is a company built on Customer Satisfaction and Service. That is why all of our products go through regimented test procedures before they are packaged and shipped. Turbosmart stands behind its products for one full year after purchase.

**Limited Warranty:** Turbosmart warrants its products to be free from defects in material and workmanship under normal use and if properly installed for a period of one year from date of purchase. If found to be defective, it will be replaced or repaired if returned prepaid along with proof of date of purchase. This shall constitute the sole remedy of the purchaser and the sole liability of Turbosmart to the extent permitted by law, the foregoing is exclusive and in lieu of all other warranties or representations whether expressed or implied, including any implied warranty of merchantability or fitness. In no event shall Turbosmart be liable for special or consequential damages. This warranty is only valid on products purchased from Turbosmart Authorized Dealers.

**Service:** After the warranty period has expired, repair service is charged based on a minimum and maximum charge rate. (Contact Customer Service for current rate).

## THE TURBOSMART PLEDGE

DO NOT USE ANY TURBOSMART PRODUCT UNTIL YOU HAVE CAREFULLY READ AND UNDERSTOOD THE FOLLOWING AGREEMENT.
Please call if you have any questions or do not understand this agreement. Refer to our brochure, website or catalogue for terms and conditions and further information regarding your product. Turbosmart appreciates your business and pride ourselves on our customer service. We are always happy to offer you advice and will provide you with help in any way we can. The purpose of this agreement is to avoid any problems or hard feelings.

We sometimes make mistakes, as do our dealers, distributors and suppliers. Even customers can sometimes order the wrong parts. Do not use, modify, install, trial assemble, nick, drop, scratch or adjust any part until you first check for any damage. Damage must be reported immediately. NO EXCEPTIONS. If there are any components missing please contact your authorized reseller immediately upon receipt of your shipment. Missing components must be reported within five (5) business days of receipt. Parts returned for any reason MUST BE IN RESALABLE CONDITION. It is YOUR responsibility, “THE CUSTOMER” to carefully package any returns to avoid shipping damage. Insurance is highly recommended. Credit cannot be issued for damaged goods.

Turbosmart warranties the quality of the products it designs and manufactures to be free of defects in material and workmanship. This limited warranty is extended only to the original purchaser and may not be transferred or assigned. This limited warranty applies to any product, which after careful inspection by Turbosmart, after receipt of the product from our authorized reseller, is found to have a defect in either material or workmanship. Any modifications to the product will void any and all warranties and will not be exchanged. Before installation, check new car warranty. Turbosmart is not responsible for voiding any original manufactures warranty.

All warranty claims must be returned to the nearest Turbosmart Office, you must return the product and sales receipt, at your own expense, accompanied by the Customer Warranty Form stating the reason for the claim. Proof of purchase must be provided with any warranty claim and will be verified with the authorized reseller from which the product was purchased.

If all the above procedures are followed, and the product is found to be defective in either workmanship or material, Turbosmart shall either repair or replace the product, at its sole discretion, and sole cost. This limited warranty does not cover or apply to any personal injury, labor charges or any other incidental costs or damages caused by the defective product. The individual purchaser acknowledges and agrees that the disclaimer of any liability for personal injury is a material term for this agreement and the individual purchaser agrees to indemnify Turbosmart and to hold Turbosmart harmless for any claim related to the item of the equipment purchased. Under no circumstances will Turbosmart be liable for any damages or expenses by reason of use or sale of any such equipment.

THIS LIMITED WARRANTY IS THE ONLY EXPRESS WARRANTY, WHICH APPLIES TO TURBOSMART PRODUCT AS EXPRESSLY GIVEN IN LIEU OF ANY OTHER WARRANTY EXPRESSED OR IMPLIED, INCLUDING THAT OF MERCHANTABILITY. ANY IMPLIED WARRANTY INCLUDING THAT OF MERCHANTABILITY AND/OR FITNESS FOR A PARTICCULAR PURPOSE IS HEREBY LIMITED BY THE SAME TERMS AND TIME LIMITATIONS SET FORTH IN THIS LIMITED EXPRESS WARRANTY AND OTHERWISE EXCLUDED. EXCEPT FOR THOSE OBLIGATIONS ASSUMED HEREIN, TURBOSMART ASSUMES NO OTHER OBLIGATIONS IN CONNECTION WITH THE SALE OF ITS PRODUCTS.
IN THE EVENT THAT THE INDIVIUDAL PURCHASER DOES NOT AGREE WITH THIS AGREEMENT THE BUYER MAY PROMPTLY RETURN THIS PRODUCT, IN A NEW AND UN-USED CONDITION, WITH A DATED PROOF OF PURCHASE, TO THE PLACE OF PURCHASE WITHIN SEVEN (7) DAYS FROM THE DATE OF PURCHASE FOR A FULL REFUND. THE INSTALLATION OF THIS PRODUCT INDICATES THAT THE INDIVIDUAL PURCHASER HAS READ AND UNDERSTOOD THIS AGREEMENT AND ACCEPTS ITS TERMS AND CONDITIONS.

**Happy motoring!**
**The Turbosmart Team.**



Discover other performance engine management systems on our website.