THULE SWEDEN

Thule SkiClick 7291 Ski Carrier

› Instructions

CITY CRASH

Complies with ISO norm

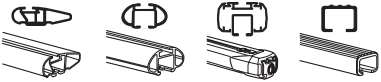

WingBar AeroBar SlideBar SquareBar

729100

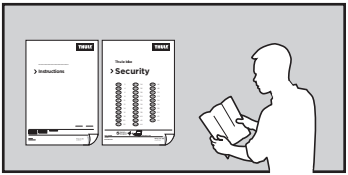
Thule
Instructions
Thule
Security

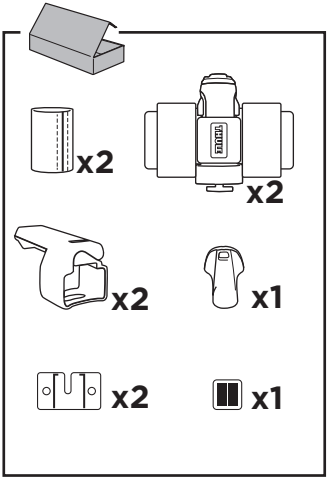
x2
x2
x2
x1
x2
x1

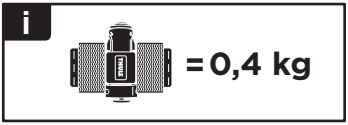
i
= 0,4 kg

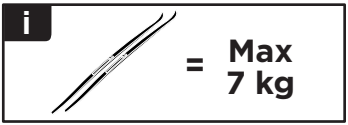
i
= Max
7 kg

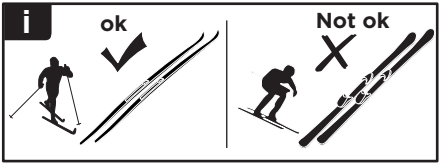
i
ok
Not ok

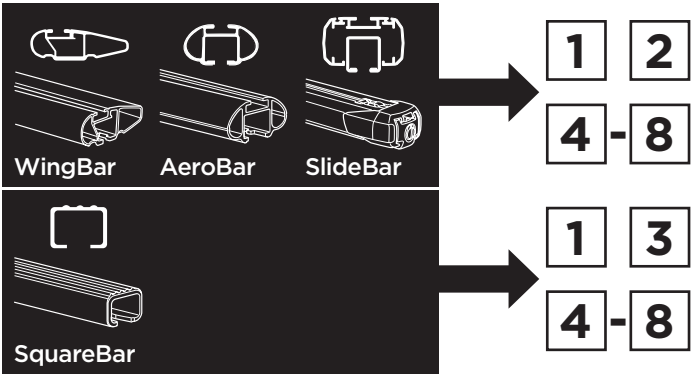
WingBar
AeroBar
SlideBar
1 2
4 - 8
SquareBar
1 3
4 - 8

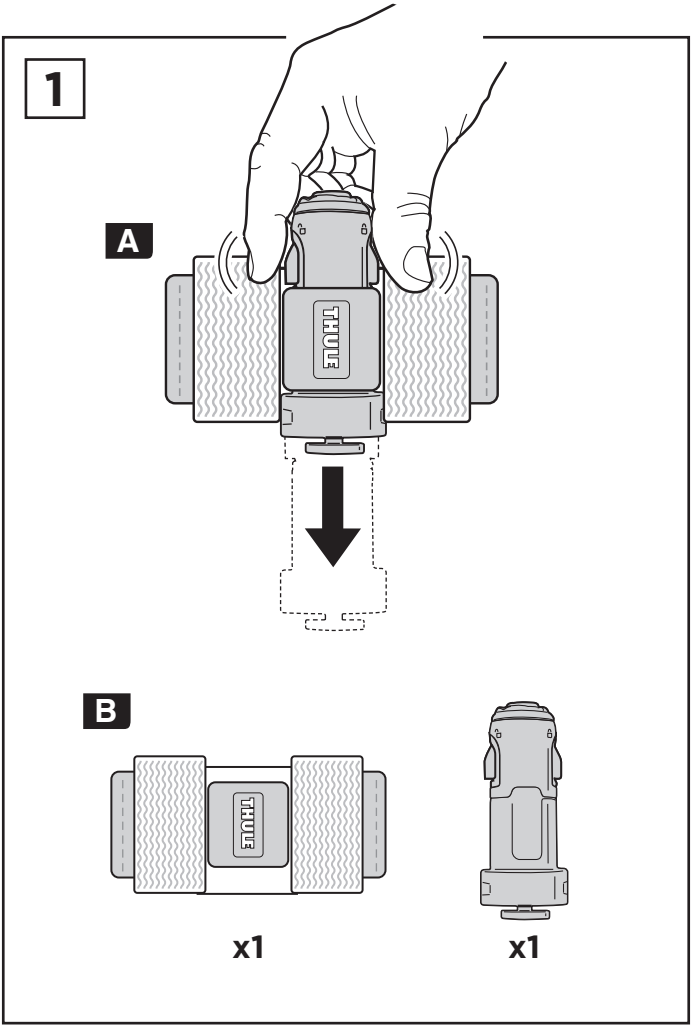
1
A
THULE
B
THULE
x1
x1

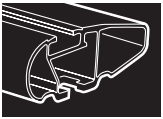
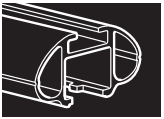
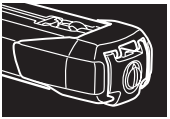

2

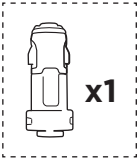

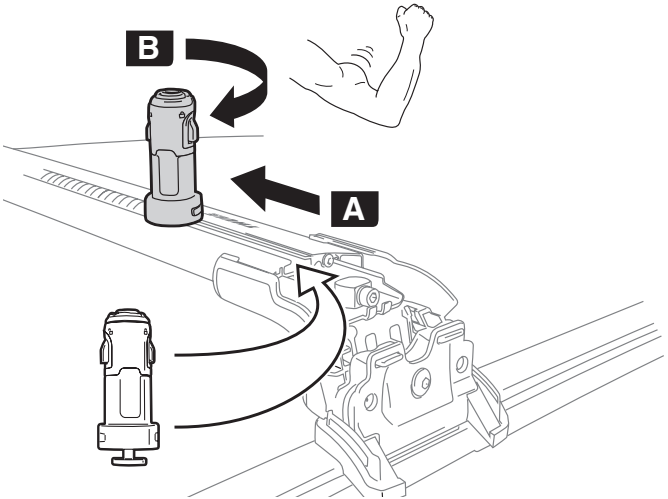

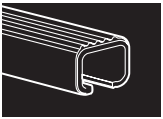

3

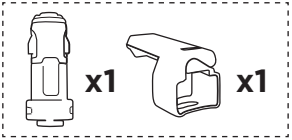

A

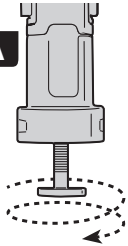

B

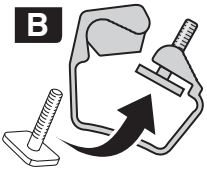

C

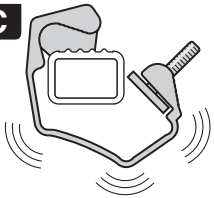

D

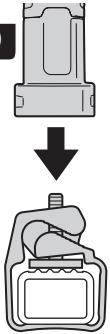

E

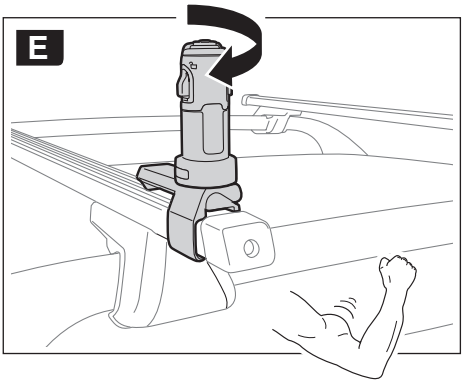

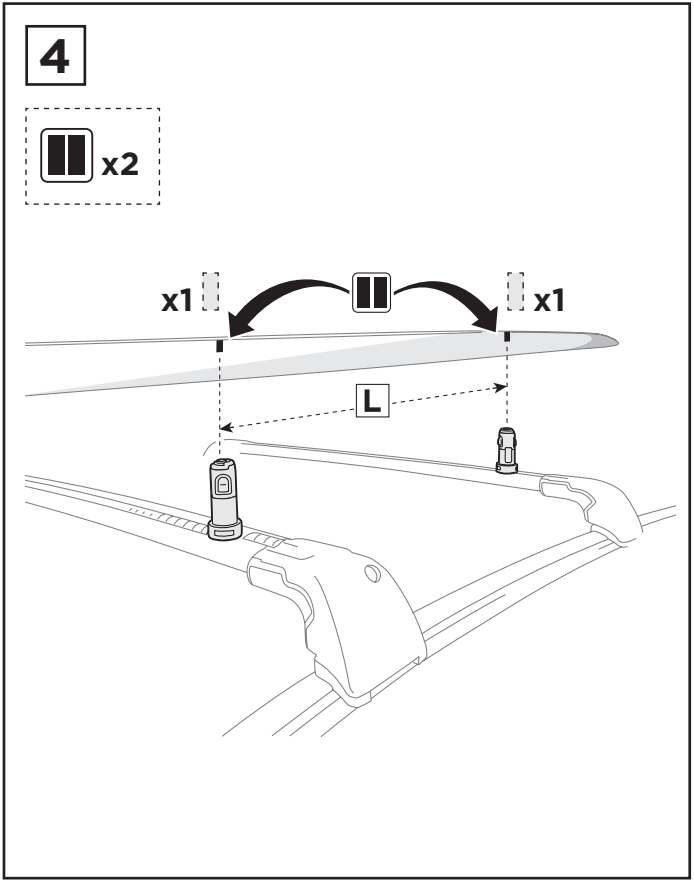
4
x2
x1
x1
L

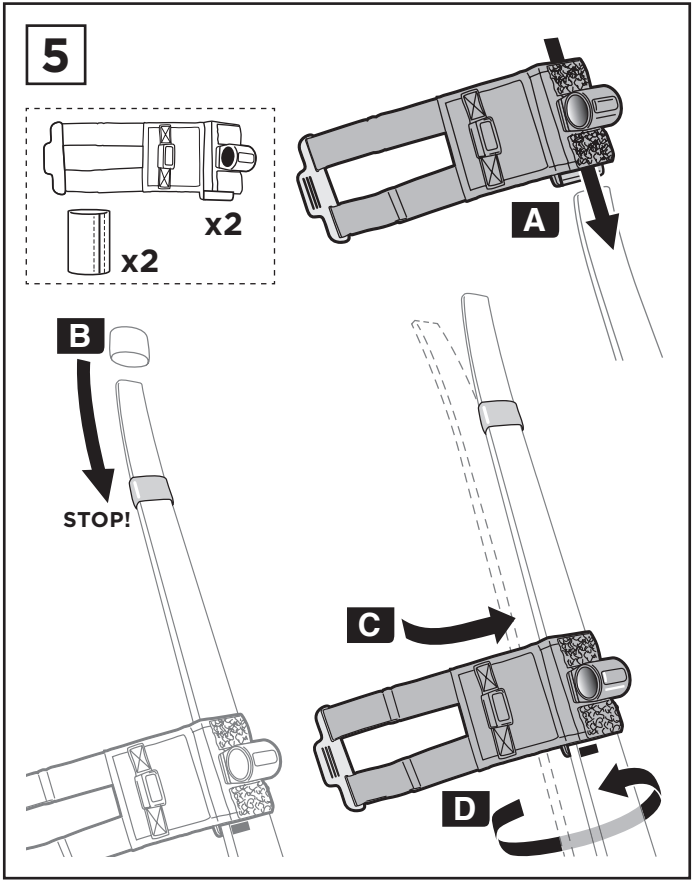
5
x2
x2
A
B
STOP!
C
D

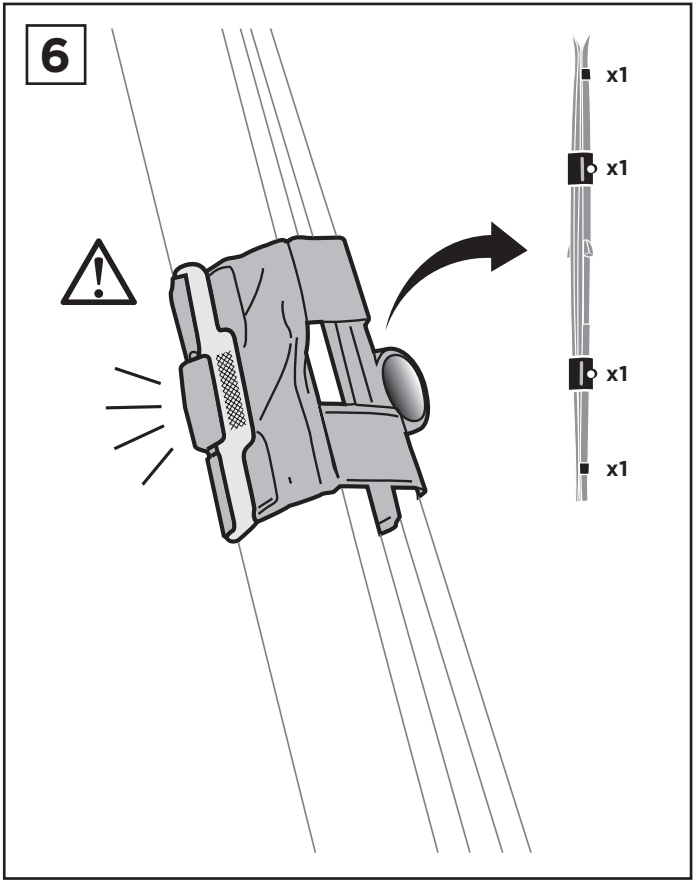
6
x1
x1
x1
x1

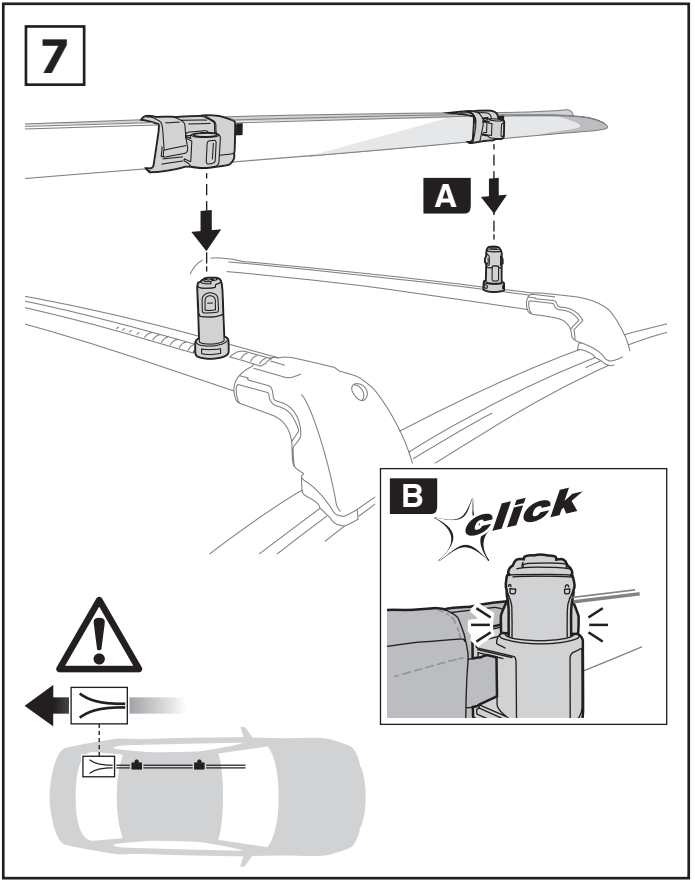
7
A
B
click

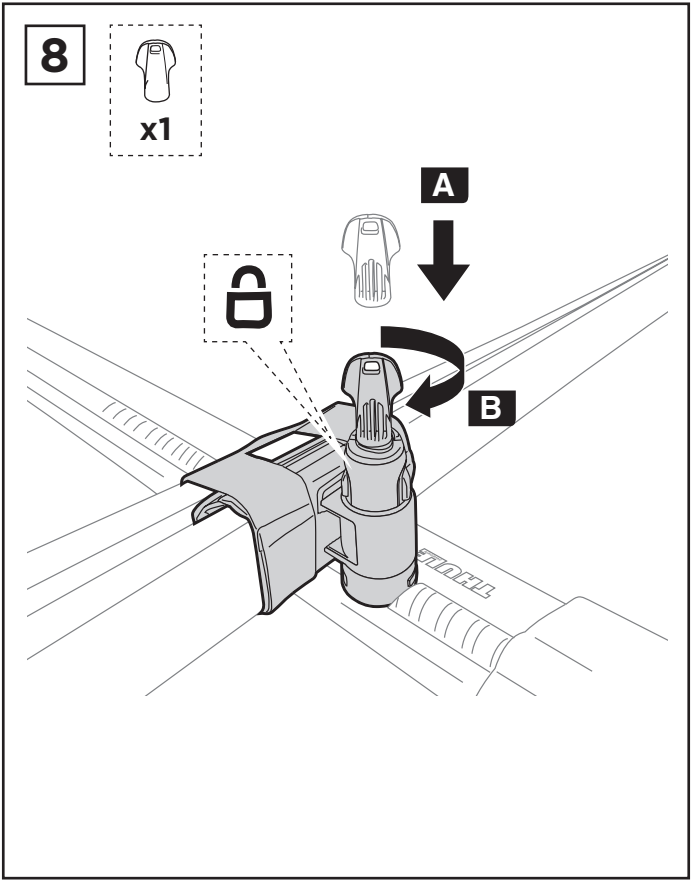
8
x1
A
B

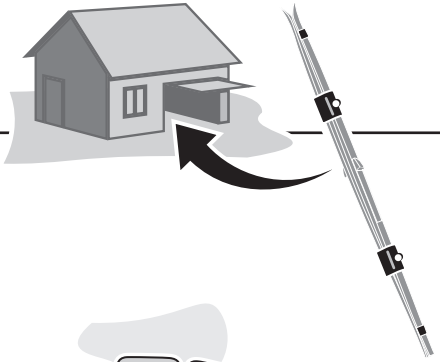

9

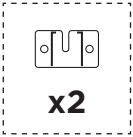

A

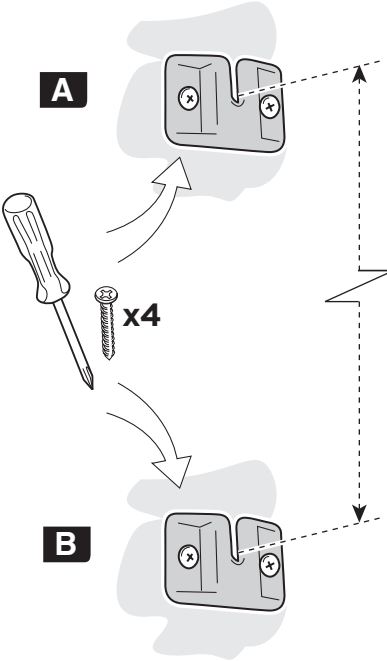

B

10

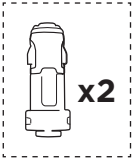

1.

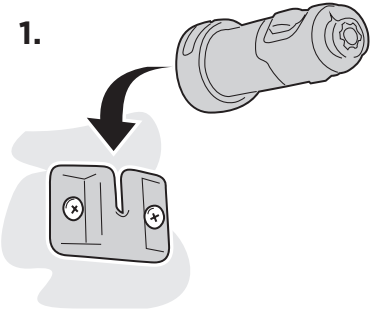

2.

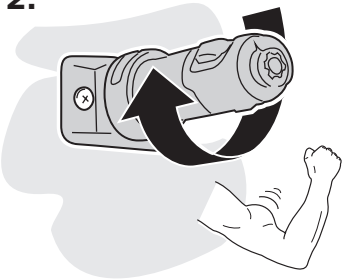

11

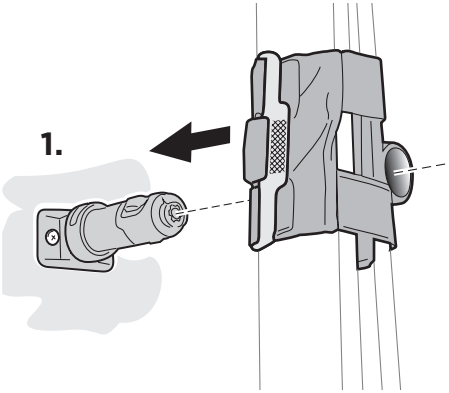

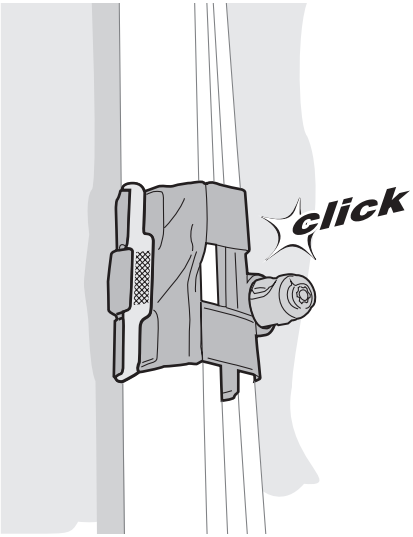

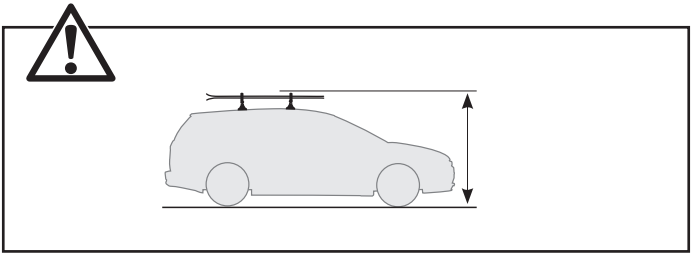

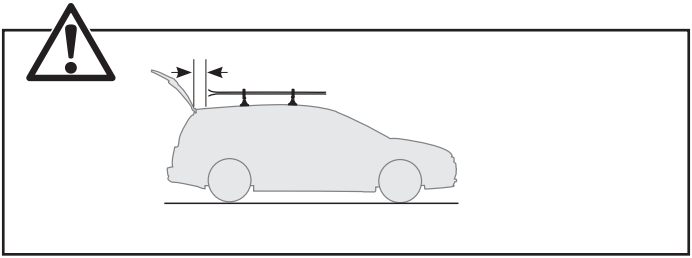

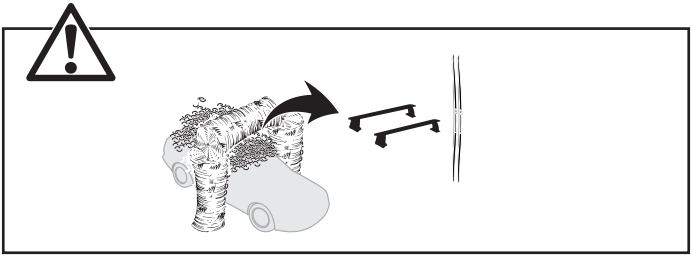

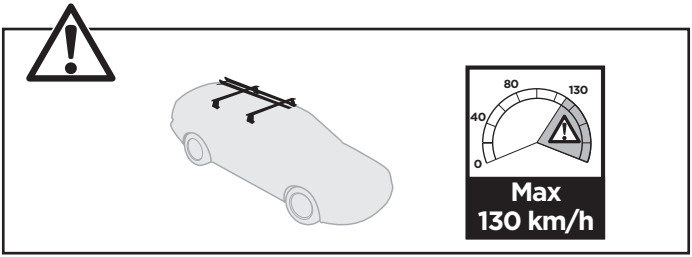
0
40
80
130
Max
130 km/h