# Jeep JT 4.5” Spring Lift

**# 1366000**

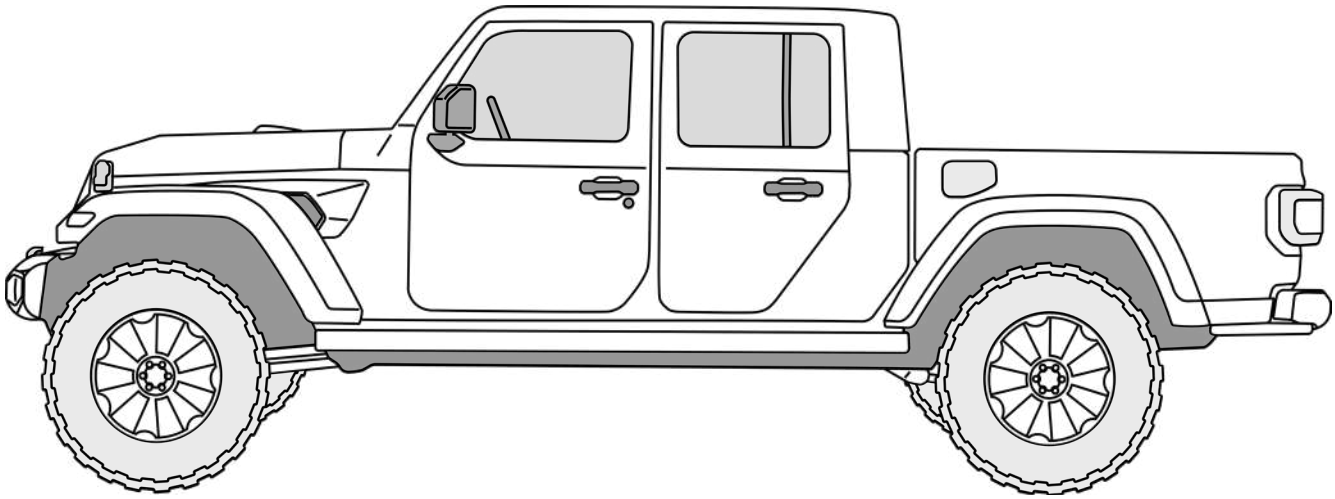

**Important Notes:**

Prior to beginning this install, or any installation, read the instructions thoroughly to familiarize yourself with the required steps. Evaluate if you are experienced and capable to personally perform these modifications. A factory service manual should be used in conjunction with these installation instructions.

This product will change the highway handling characteristics of your vehicle, exercise caution. After altering the suspension it is always advisable to have an alignment done by a competent 4 wheel drive shop or by an alignment shop that is experienced with lifted 4 wheel drive vehicles.

Refer to the parts list to ensure that all necessary components and hardware has been included. If any parts are missing please contact your local TeraFlex dealer for assistance.

**Tools Needed:**

- **Metric Sockets and Open End Wrenches**
- **Torque Wrench**
- **Factory Service Manual**
- **General Mechanics Tools**

**Maintenance Note:**

After the first 300 miles and every 3,000 miles after that, re-torque all the suspension components and bolts.

Spring Box Components

| | Description | Item # | Base Lift |
|---|---|---|---|
| 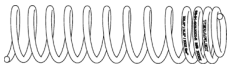 | 1 Front Spring | 02-21-601-450-1 | 2 |
| 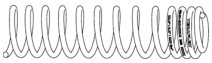 | 2 Rear Spring | 02-23-401-250-1 | 2 |
|  | 3 Front Bumpstops | 12-01-109-200 | 2 |
|  | 4 Front Bumpstop Spacer | 12-02-109-050 | 4 |
|  | 5 Rear Top Bumpstop Spacers 1.5" | 12-01-309-150 | 2 |
| 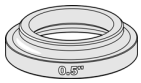 | 6 Rear Top Bumpstop Spacer Rings .5" | 12-01-309-050 | 2 |
| 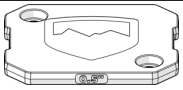 | 7 Rear Bumpstop Spacers | 12-02-309-050 | 2 |
|  | 8 Front Track Bar Bracket Kit | 1953500 | 1 |
|  | 9 Front Swaybar link 11.50" | 21-01-001-115 | 2 |
|  | 10 Rear Swaybar Link 13.0" | 21-01-001-130 | 2 |
|  | 11 M10 x 1.5 x 70mm Hex Flange Bolt | 45-21-001-001 | 2 |
|  | 12 Flat Washer | 45-10-003-003 | 4 |
|  | 13 M10 x 1.5 Fuji Nut | 23-07-03-001 | 4 |
|  | 14 M10 x 1.5 x 100mm Flat Socket Cap Screw | 45-04-003-001 | 2 |
|  | 15 M8 x 1.25mm Yellow Zinc Fuji Nut | 23-07-03-002 | 4 |
| 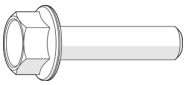 | 16 M8 x 1.25 x 30mm Hex Flange Bolt | 45-02-003-016 | 4 |
| 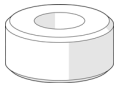 | 17 Rear Upper Bumpstop Spacer | 56-10-05-044-1-1 | 2 |
|  | 18 Nut Wrench Tool | 600271 | 1 |

***NOTES***

***FOR ALPINE & ALPINE IR CONTROL ARM KITS: Refer to Instruction #999373 before continuing.**



**-CONTROL ARMS WITH ALPINE IR BUSHINGS can be torqued with the Jeep raised in the air.**

**-CONTROL ARMS WITH ALPINE BUSHINGS Will need to leave the control arms loose until the end of the installation.**



***FOR SPEEDBUMP KITS: Refer to Instruction #999370 before continuing.**

***FOR FRONT TRACK BAR: Refer to Instruction 999340**



***FOR FRONT QUICK DISCONNECTS: Refer to Instruction 999372**

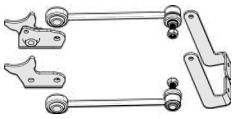

## FRONT INSTALLATION
## LIFT AND SUPPORT AT FRAME

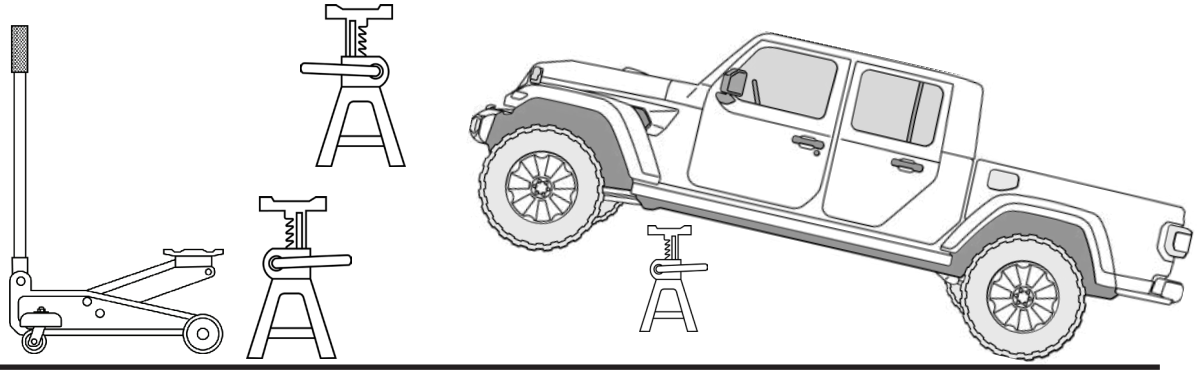

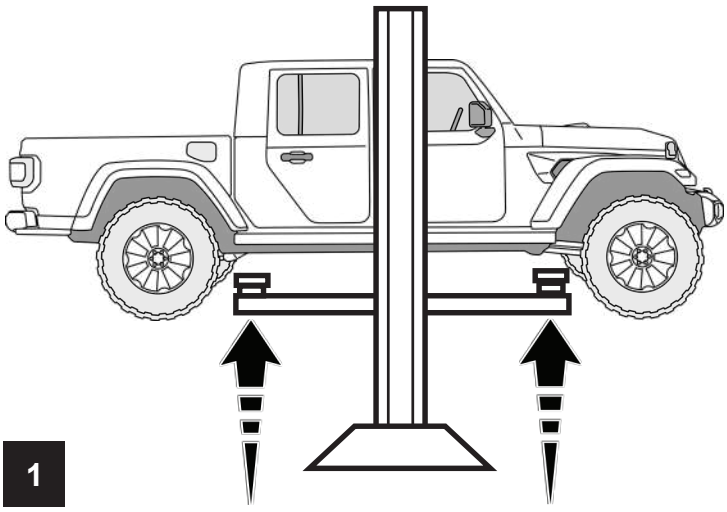

1

### REMOVE FRONT TIRES

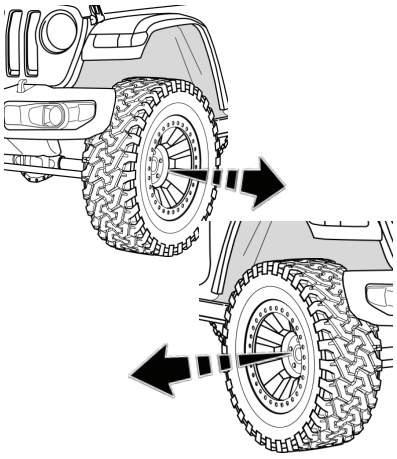

2

**SUPPORT FRONT AXLE**

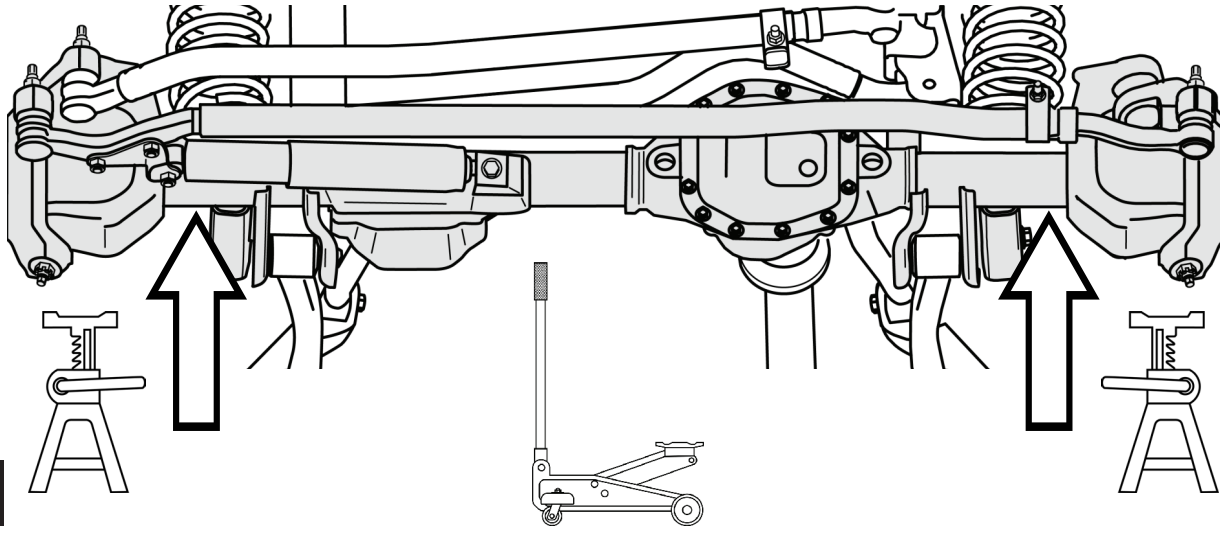

3

**REMOVE SWAY BAR LINKS & REMOVE TRACK BAR BOLT AT AXLE**

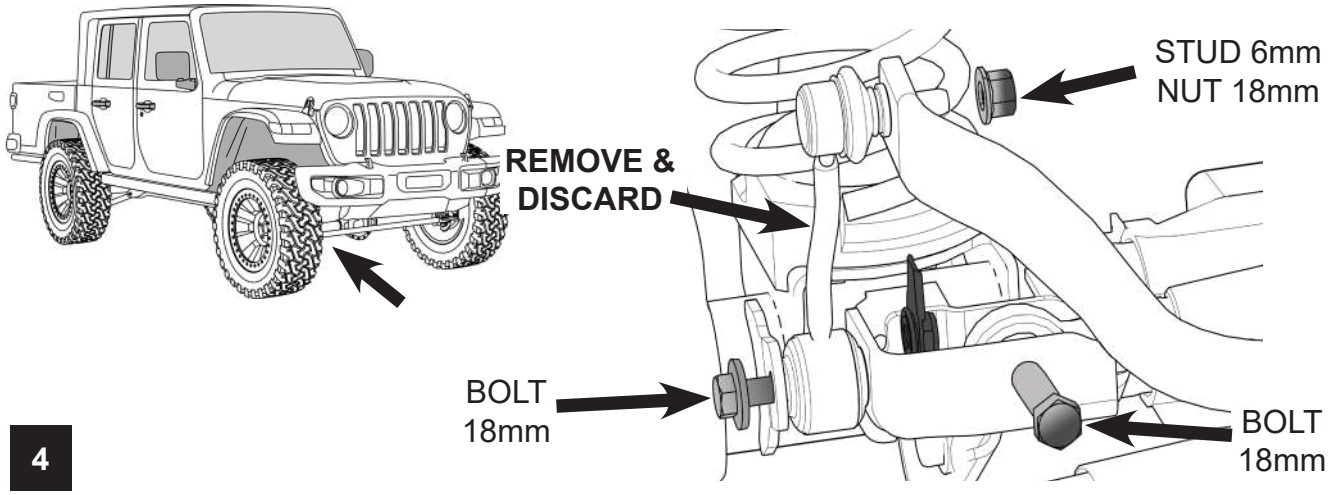


4

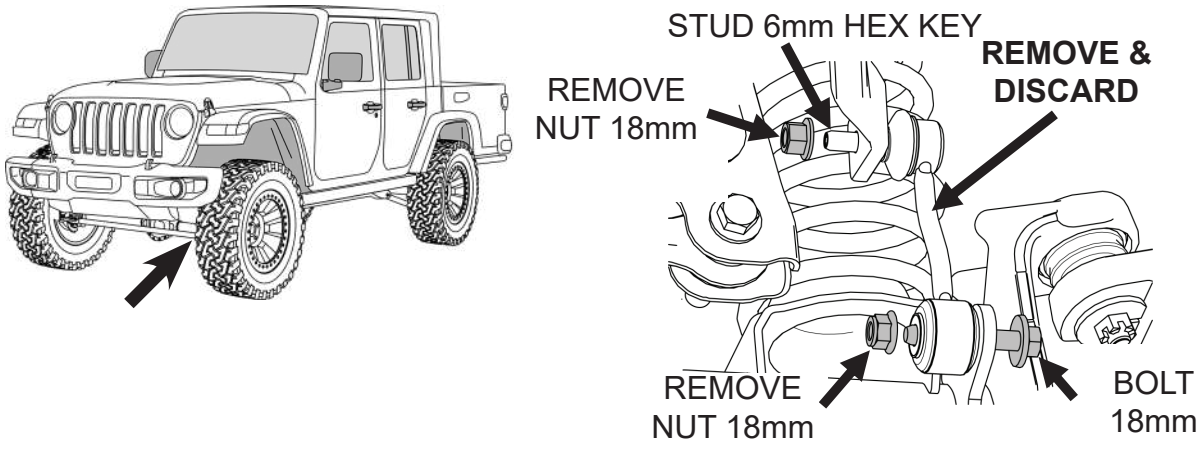


5

## REMOVE AND DISCARD BRAKE LINE BRACKETS FROM LOWER CONTROL ARMS

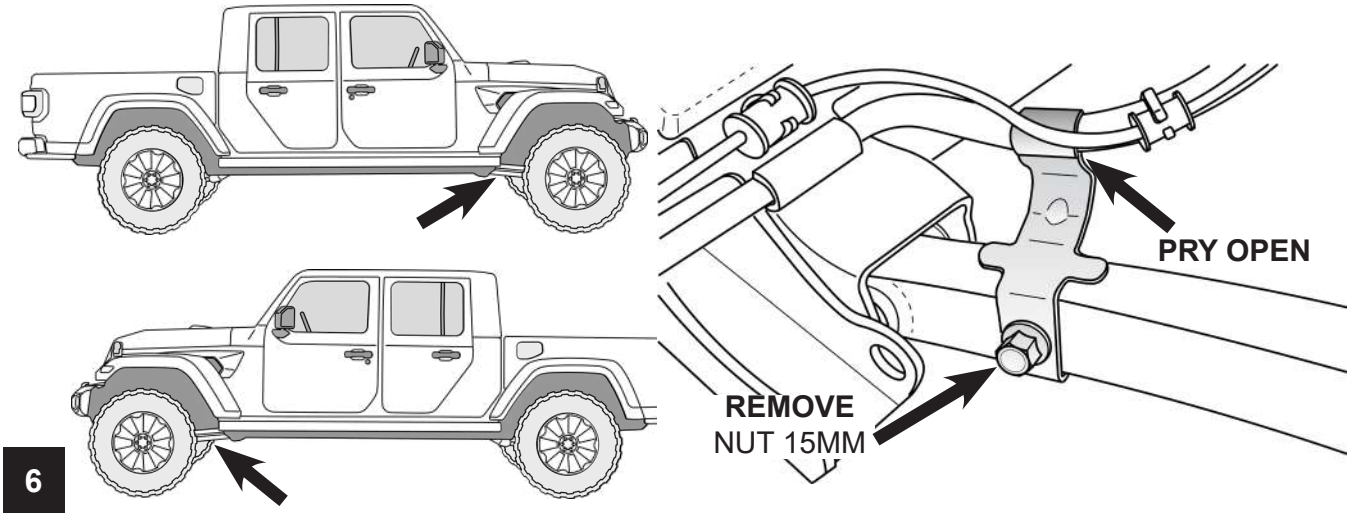


6

## DISCONNECT ACTUATORS AND VENT HOSE AT THE FRONT AXLE

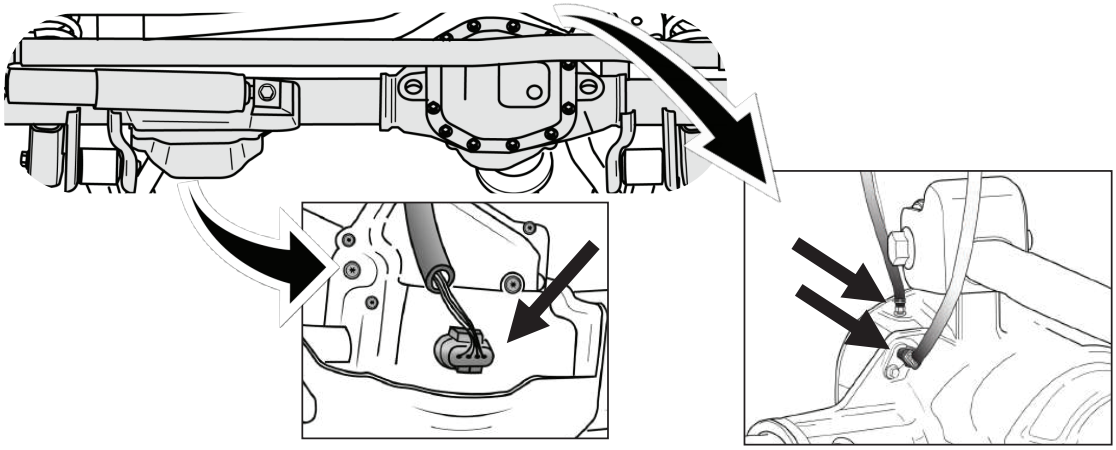

7

## LOOSEN FRONT CONTROL ARM BOLTS
## DO NOT REMOVE THE CONTROL ARM BOLTS

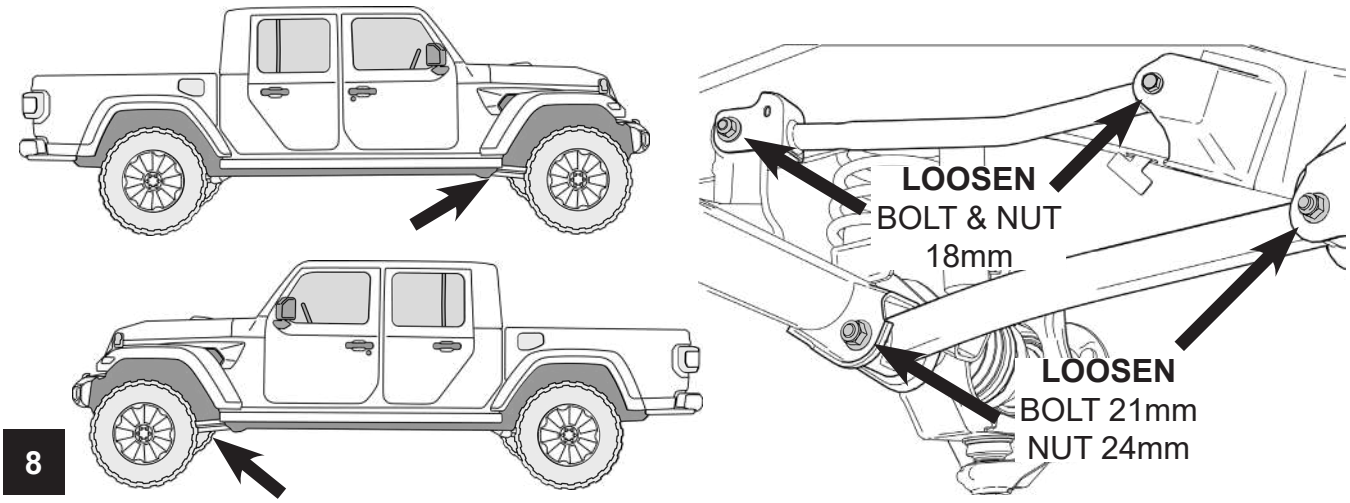


8

## REMOVE FRONT SHOCKS

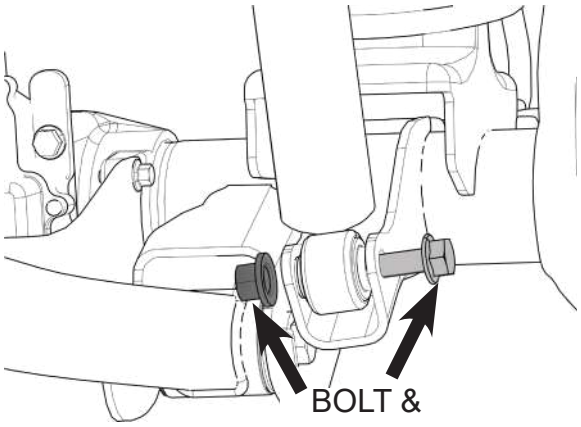


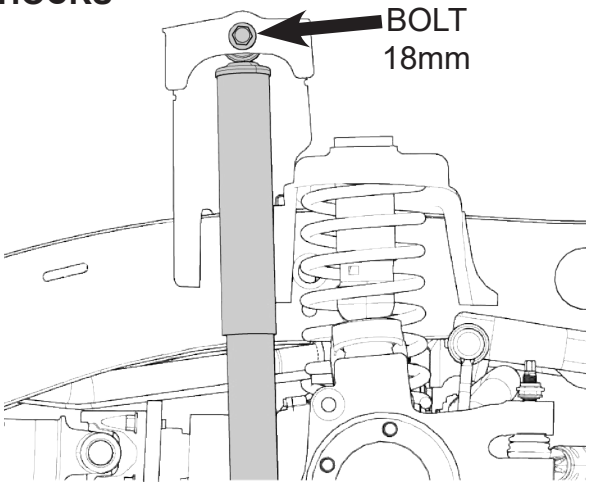


**9**

## LOWER AXLE AND REMOVE FRONT SPRINGS

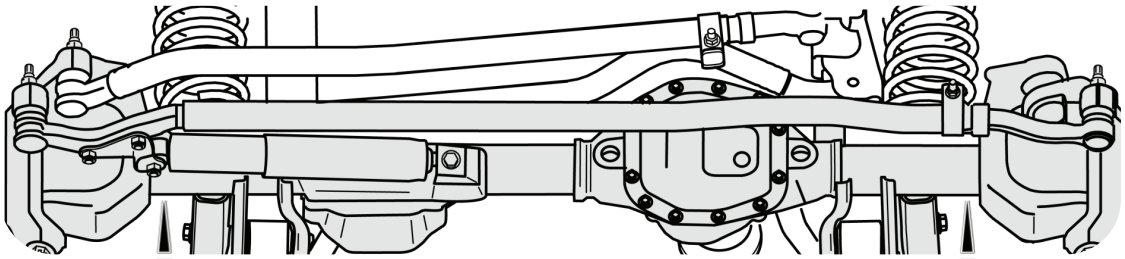

**NOTE: REMOVE ANY PLASTIC RETAINERS FROM WIRING OR HOSES AS NEEDED.**

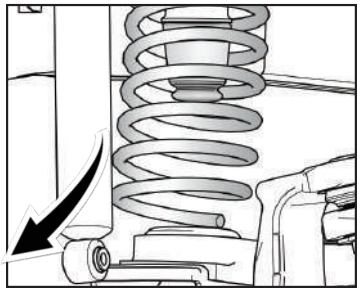

**10**

## INSTALL BUMPSTOP INTO NEW FRONT SPRING

**NOTE:**

- **FOR FALCON JOUNCE BUMPER KITS: Refer to instruction #999364**
- **FOR SPEEDBUMP KITS: Refer to Instruction #999370 before continuing.**

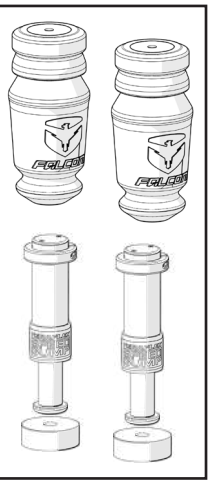

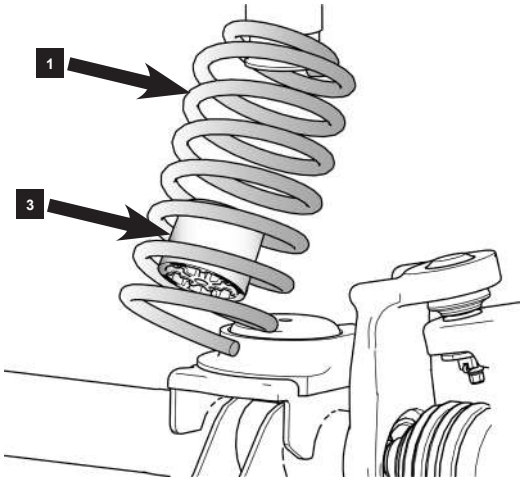


**11**

## INSTALL THE BUMPSTOP ONTO THE AXLE AND FULLY SEAT THE SPRINGS INTO THE LOWER SPRING PERCH

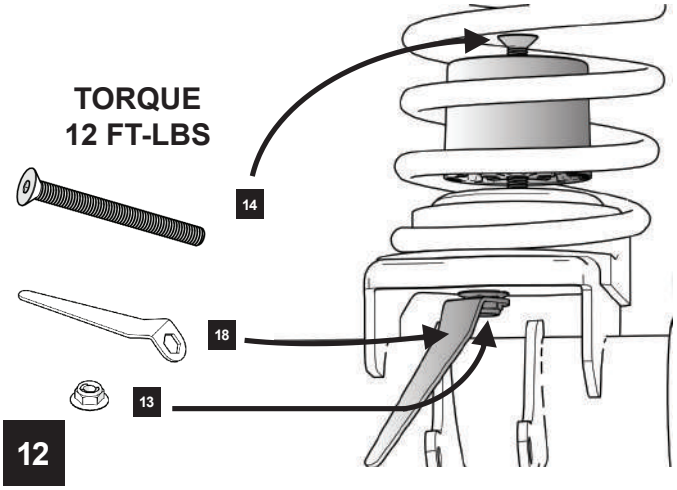


12

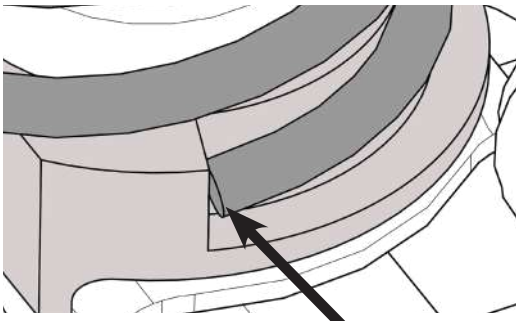

MAKE SURE SPRING IS FULLY SEATED ON PERCH

## RAISE AXLE & INSTALL SHOCKS

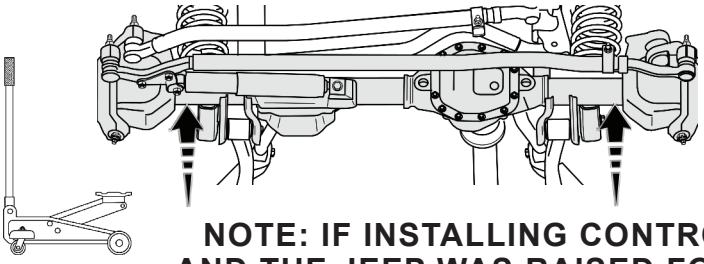

### FOR INSTALLING FALCON SHOCKS

(REFER TO **QUICK START GUIDE** INSIDE FALCON SHOCK BOX)

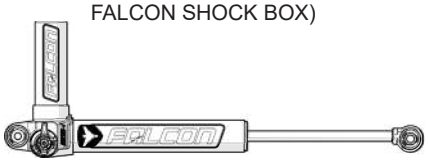


**NOTE: IF INSTALLING CONTROL ARMS WITH ALPINE BUSHINGS, AND THE JEEP WAS RAISED FOR INSTALLATION, LOWER THE JEEP TO THE GROUND AND FINISH INSTALLATION BY TORQUING THE CONTROL ARM BOLTS.**

**NOTE: IF INSTALLING CONTROL ARMS WITH *ALPINE IR BUSHINGS* THE CONTROL ARMS CAN BE TORQUED WITH THE JEEP RAISED IN THE AIR. REFER TO PAGE 13 FOR TORQUE SETTINGS**

13

## (OPTIONAL) INSTALL BRAKE LINE ANCHORS

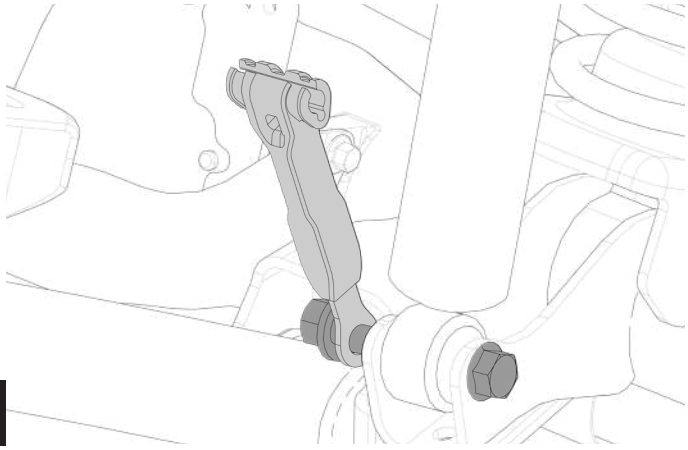

**REFER TO THE INSTRUCTIONS ON THE BACK OF THE BRAKE LINE ANCHOR KIT BOX FOR PROPER INSTALLATION.**

14

## RECONNECT CONNECTIONS TO FRONT AXLE

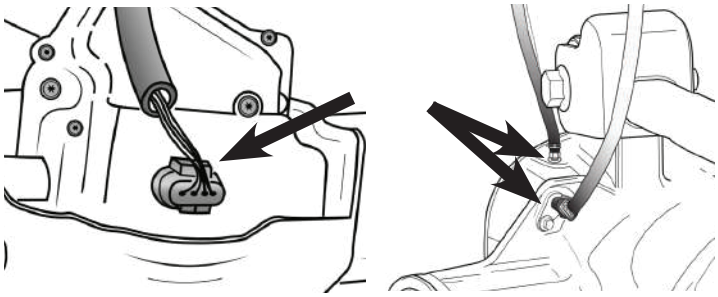

**RECONNECT PLASTIC RETAINERS FROM WIRING OR HOSES AS NEEDED.**

15

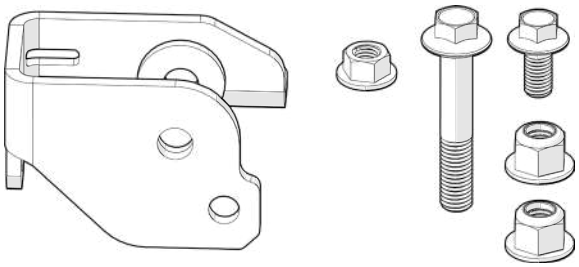

**NOTE: REFER TO INSTRUCTION 999312 FOR INSTALLING FRONT TRACK BAR BRACKET**

**NOTE: IT IS EASIEST TO REINSTALL TRACK BAR AFTER JEEP IS BACK ON THE GROUND**

16

## INSTALL NEW SWAY BAR LINKS

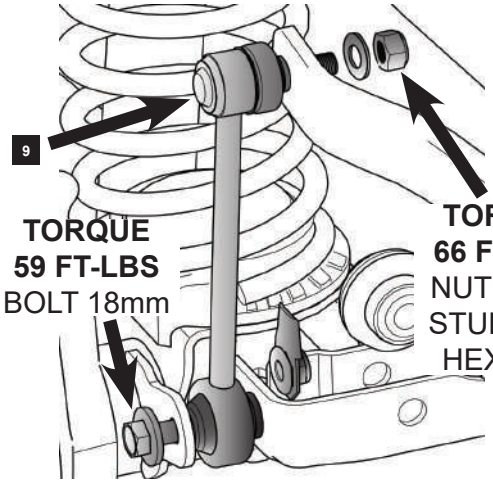


17

**NOTE: IF INSTALLING QUICK DISCONNECTS, REFER TO INSTRUCTIONS #999372**

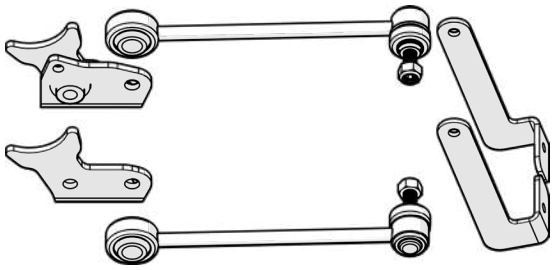

**NOTE: IF ONLY FRONT OF JEEP WAS LIFTED, REINSTALL TIRES AND LOWER JEEP BACK TO THE GROUND BEFORE LIFTING THE REAR**

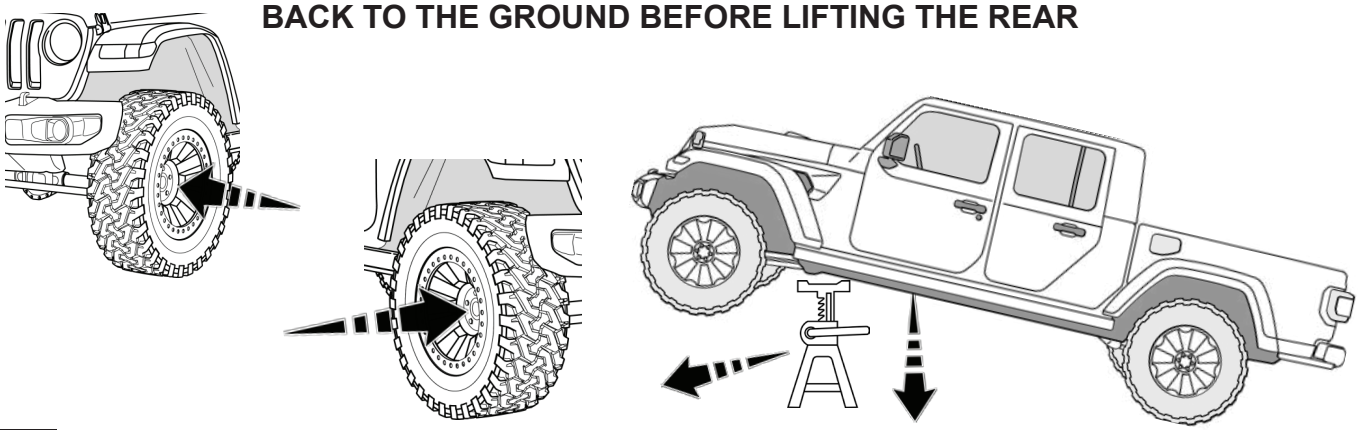

18

***TORQUE THE FRONT TIRES TO 130 FT LBS***

# REAR INSTALLATION

## LIFT AND SUPPORT AT FRAME

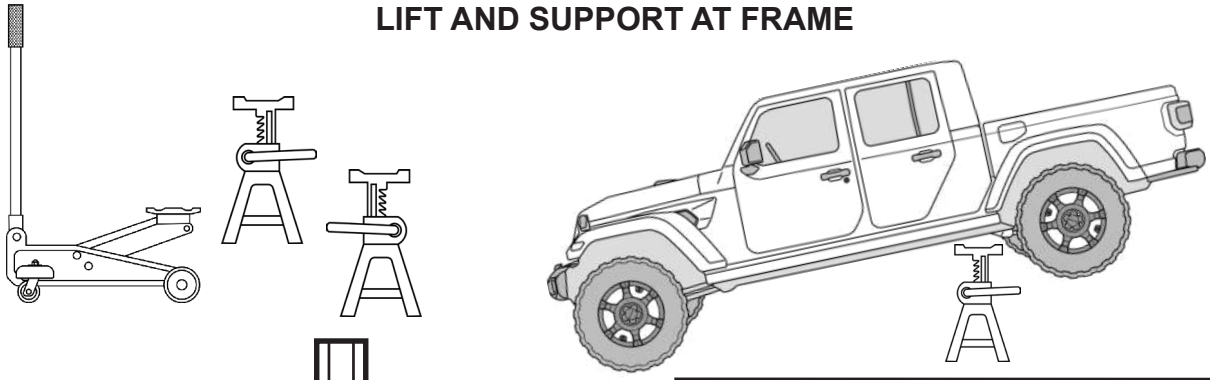

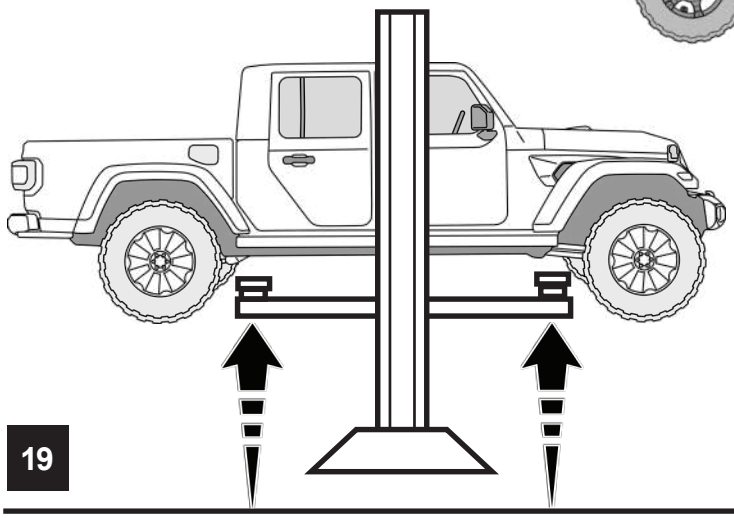

19

## REMOVE REAR TIRES

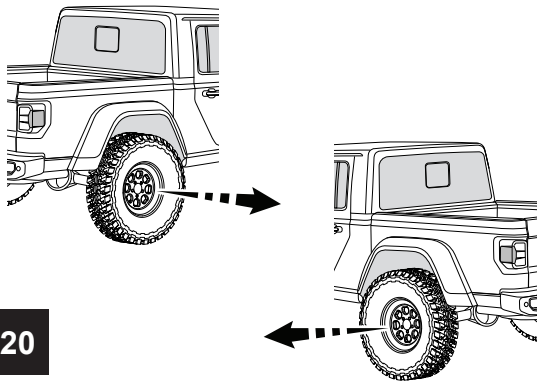

20

## SUPPORT REAR AXLE

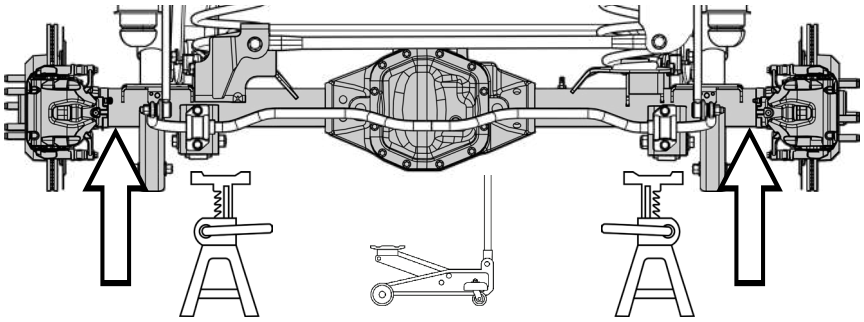

21

## REMOVE SWAY BAR LINKS

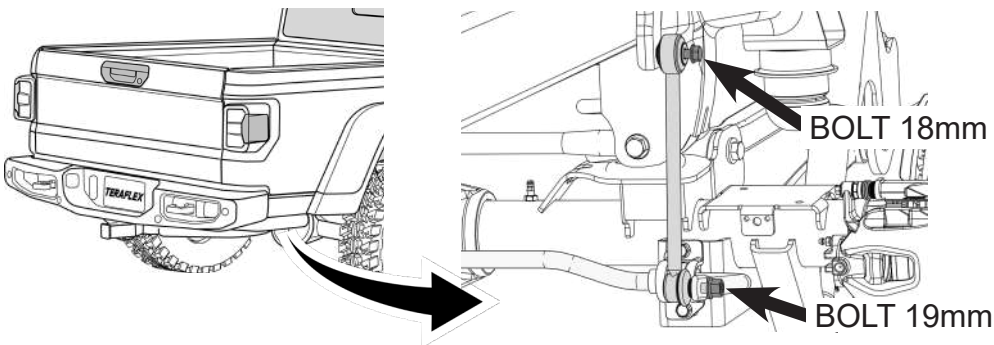


22

## TEMPORARILY REMOVE BRAKE LINE BRACKETS FROM BOTH SIDES OF THE FRAME

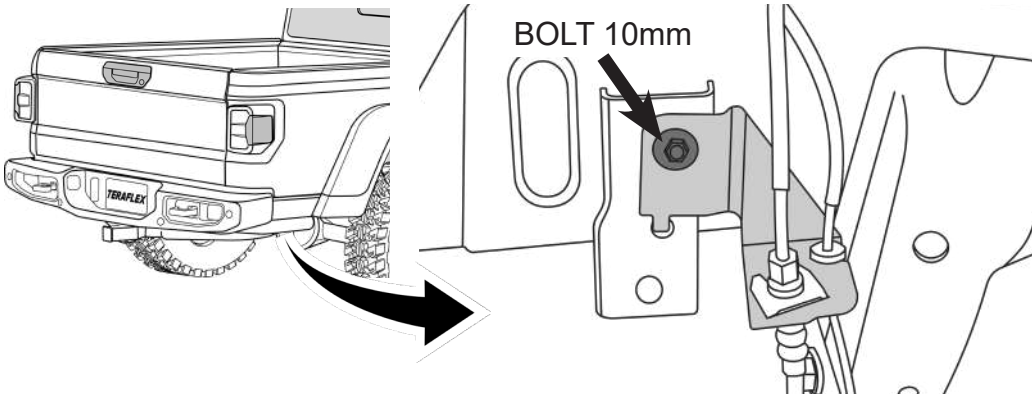


23

## REMOVE THE TRACK BAR FROM THE AXLE

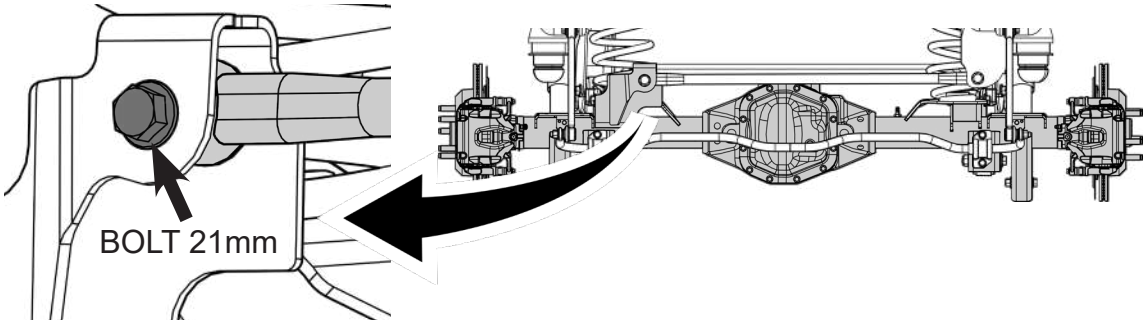


24

## REMOVE BRAKE CALIPERS AND WIRE BRACKET FROM THE AXLE

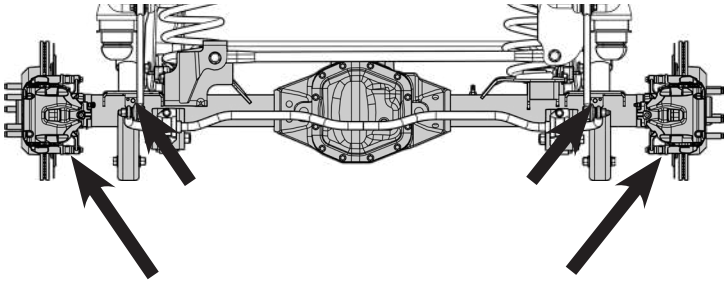

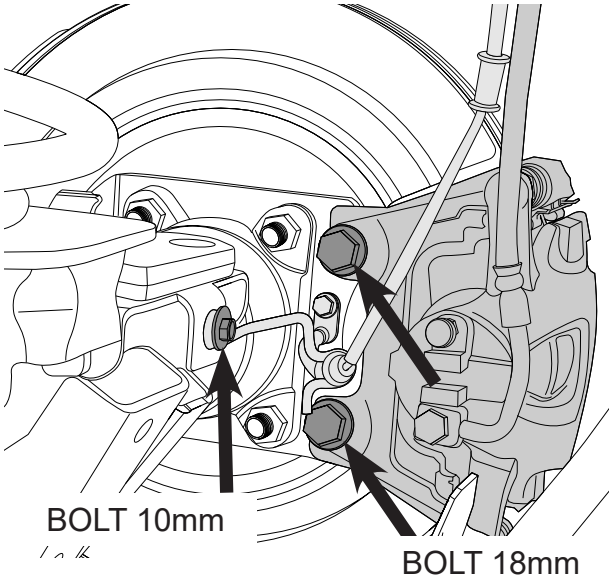


25

## SUPPORT FRONT OF REAR AXLE

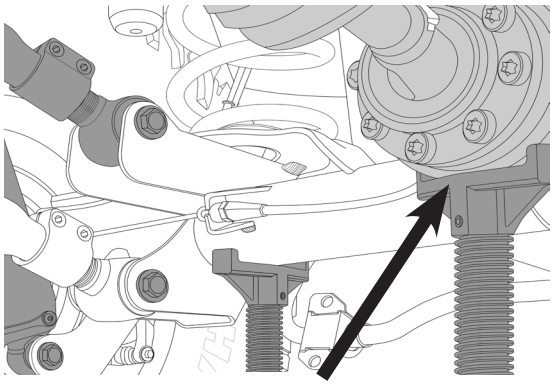


26

## LOOSEN REAR CONTROL ARM BOLTS

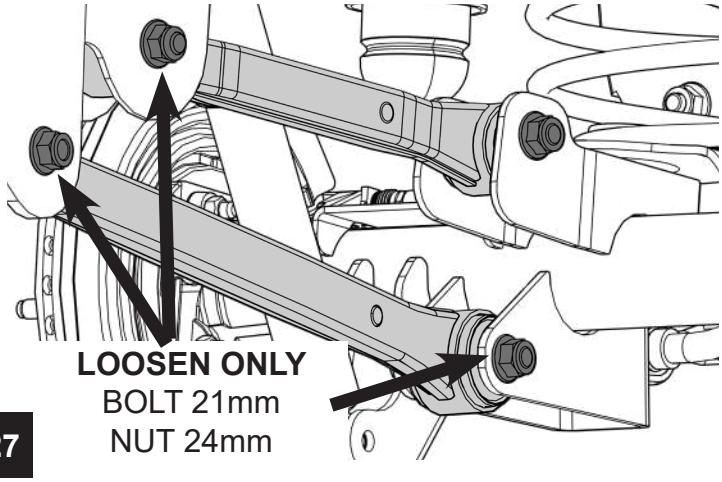


27

## REMOVE UPPER CONTROL ARM BOLT AT THE AXLE

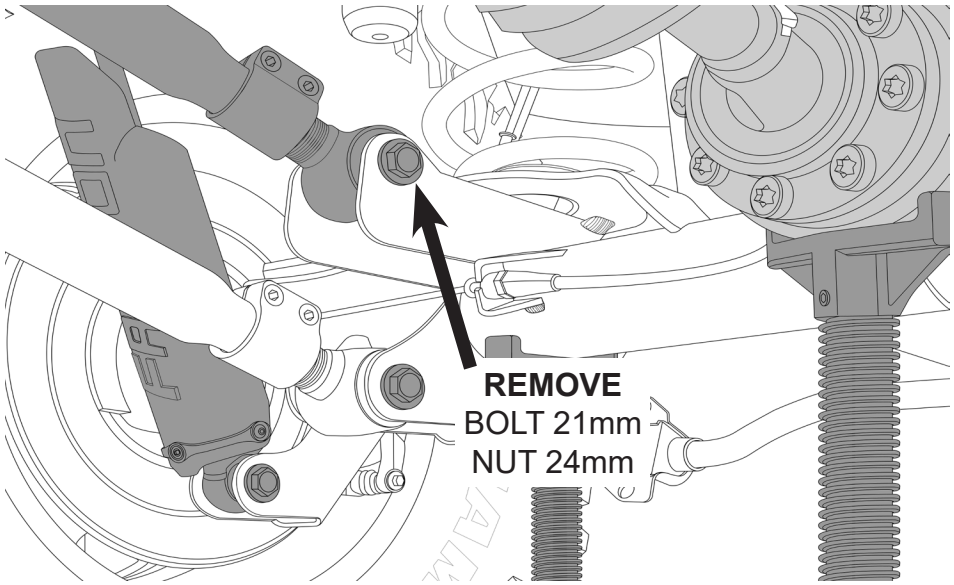


28

## REMOVE THE REAR SHOCKS

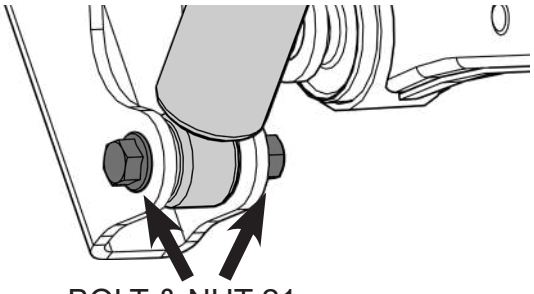


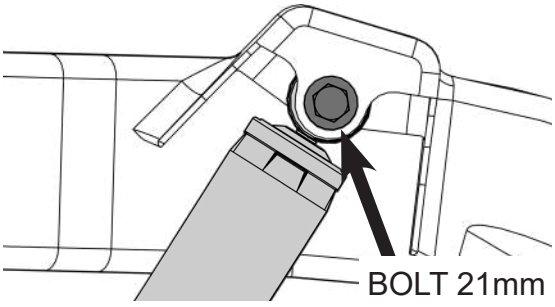


29

## LOWER AXLE TO REMOVE REAR SPRINGS

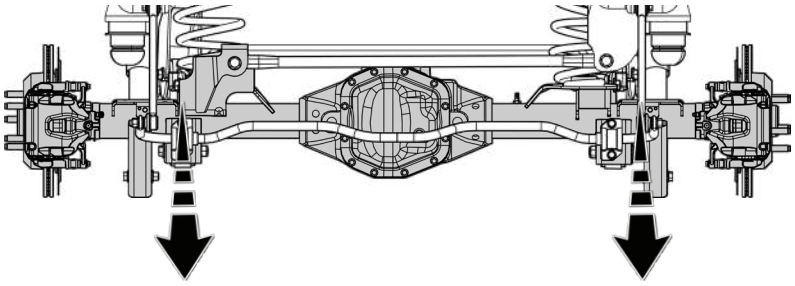

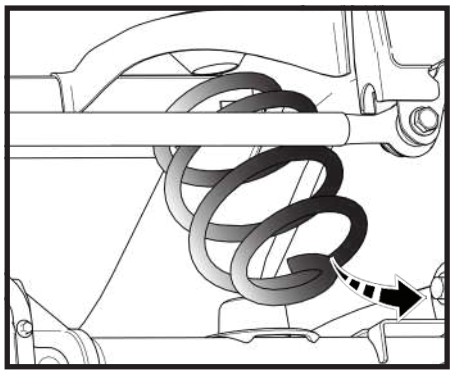

**30**

**NOTE: REMOVE ANY PLASTIC RETAINERS FROM WIRING OR HOSES AS NEEDED.**

## INSTALL THE NEW REAR SPRINGS

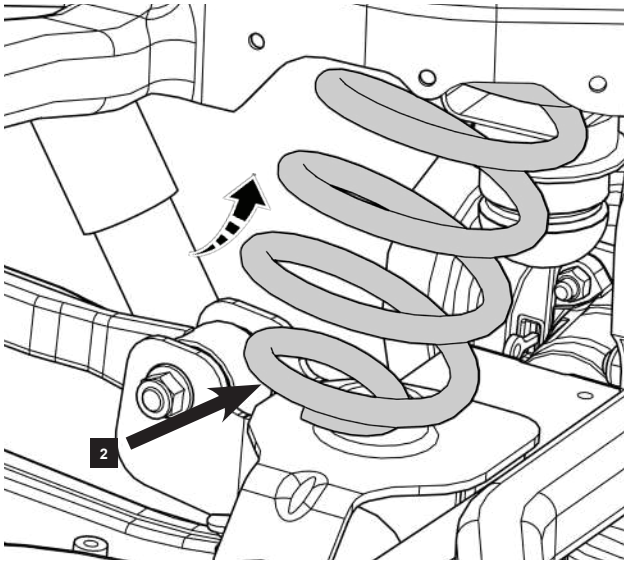


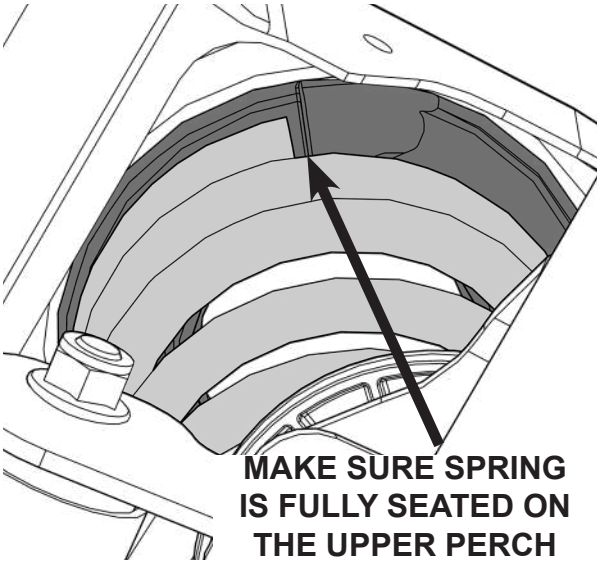

**MAKE SURE SPRING IS FULLY SEATED ON THE UPPER PERCH**

**31**

## REINSTALL UPPER CONTROL ARMS

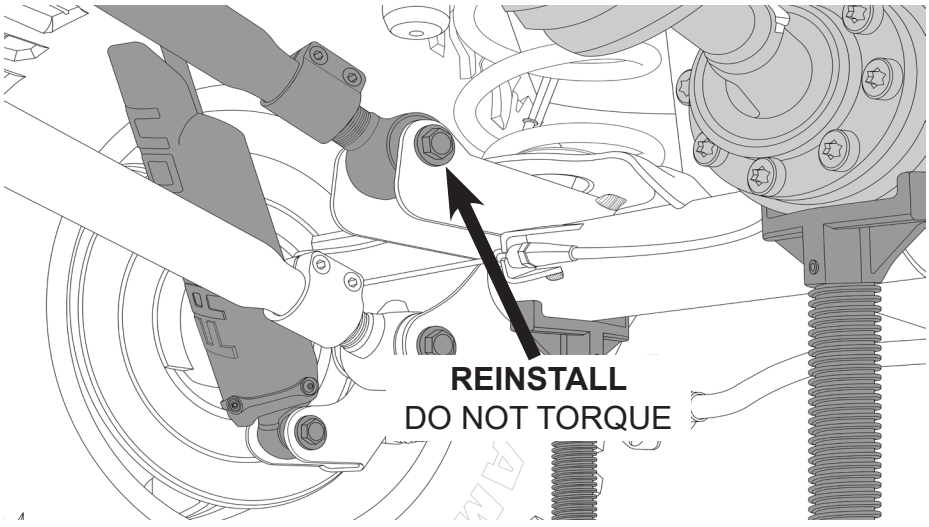

**REINSTALL**
DO NOT TORQUE

**32**

## RAISE THE REAR AXLE AND INSTALL NEW SHOCKS

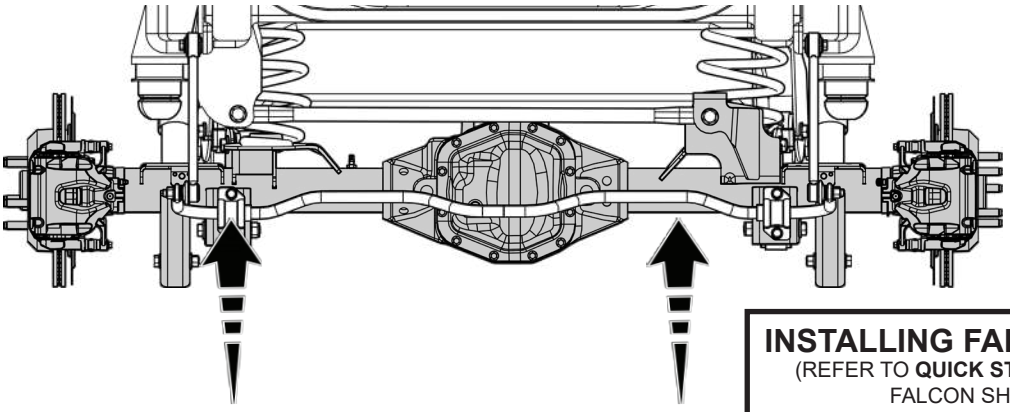

**INSTALLING FALCON SHOCKS**
(REFER TO **QUICK START GUIDE** INSIDE FALCON SHOCK BOX)

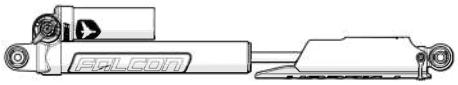


**NOTE: IF INSTALLING CONTROL ARMS WITH ALPINE BUSHINGS, AND THE JEEP WAS RAISED FOR INSTALLATION, LOWER THE JEEP TO THE GROUND AND FINISH INSTALLATION BY TORQUING THE CONTROL ARM BOLTS.**

**NOTE: IF INSTALLING CONTROL ARMS WITH *ALPINE IR BUSHINGS* THE CONTROL ARMS CAN BE TORQUED WITH THE JEEP RAISED IN THE AIR. REFER TO PAGE 14 FOR TORQUE SETTINGS**

**33**

## INSTALL THE NEW REAR SWAY BAR ENDLINKS

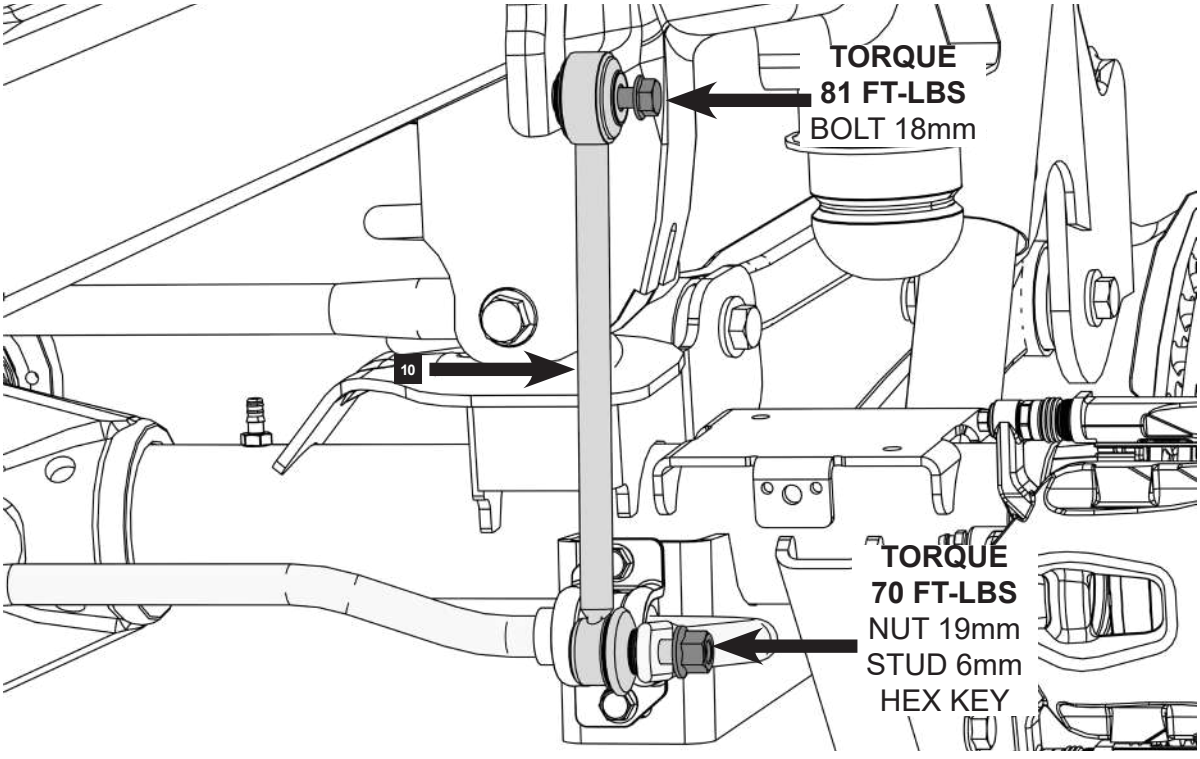


**34**

## REINSTALL BRAKE CALIPERS AND WIRE BRACKETS

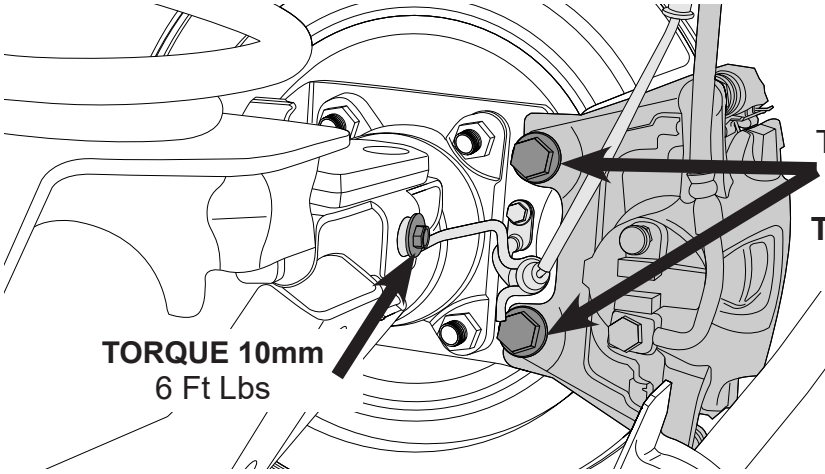

APPLY BLUE THREAD LOCK TO BOLTS

**TORQUE 18mm**
74 Ft Lbs

**TORQUE 10mm**
6 Ft Lbs

**35**

## INSTALL THE REAR BUMPSTOP SPACERS

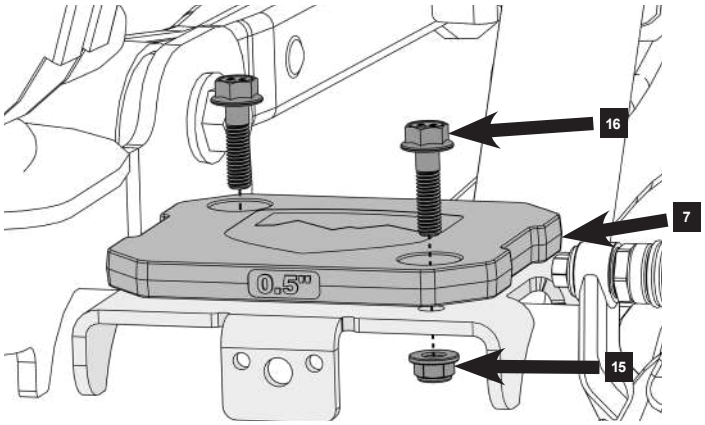


**TORQUE**
**15 FT-LBS**
BOLT 13mm
NUT 12mm

**36**

## INSTALL UPPER BUMPSTOP SPACER

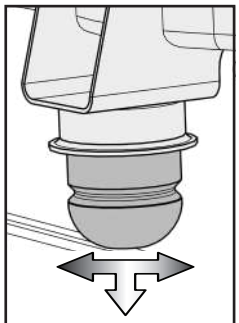

**TWIST AND PULL DOWN TO REMOVE BUMPSTOP FROM FRAME**

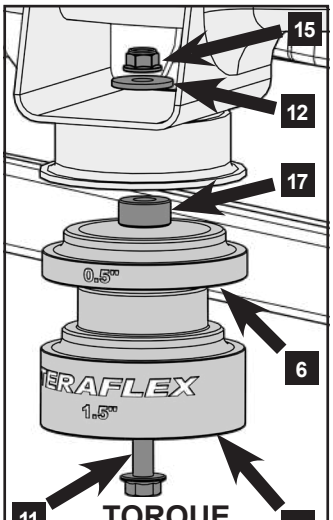


**TORQUE**
**40 FT-LBS**
BOLT 15mm
NUT 14mm



**TWIST AND PUSH UP TO INSTALL BUMPSTOP INTO SPACER**

**37**

## REINSTALL THE BRAKE LINE BRACKETS TO THE FRAME

**TORQUE 6 FT LBS**
BOLT 10mm

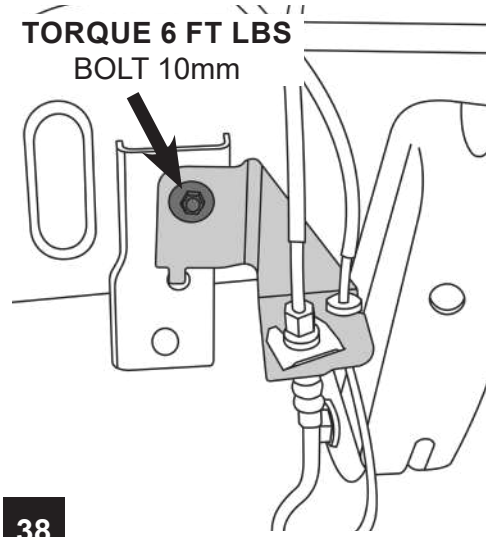

**38**

## REINSTALL TIRES AND LOWER TO THE GROUND

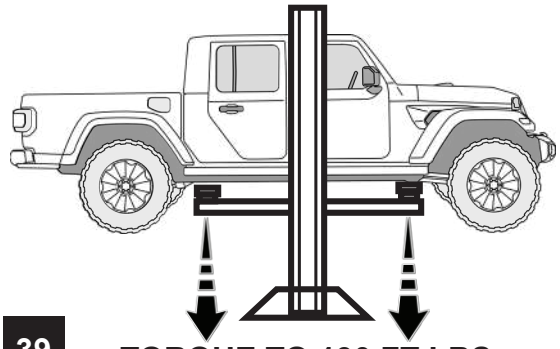

39 **TORQUE TO 130 FT LBS**

## REINSTALL TRACK BARS AND TORQUE TO THE FOLLOWING SPECS

**TORQUE REAR**
BOLT 21mm
100 Ft Lbs

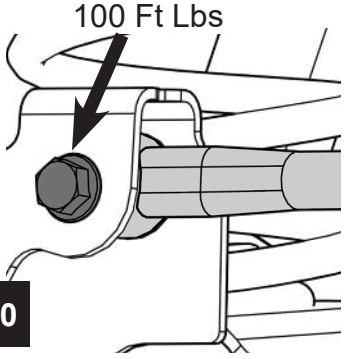

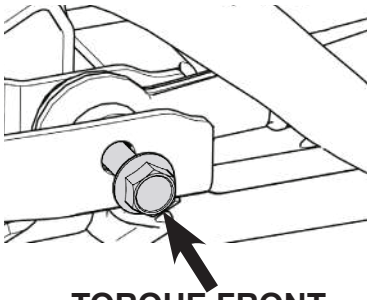

**TORQUE FRONT**
BOLT 18mm
52 Ft Lbs + 155°
**(REF: 230-250 Ft Lbs)**

40

## TORQUE CONTROL ARMS

**REAR**

**TORQUE**
111 Ft Lbs + 95°
**(REF: 240-260 Ft Lbs)**

**TORQUE**
111 Ft Lbs + 65°
**(REF: 180-200 Ft Lbs)**

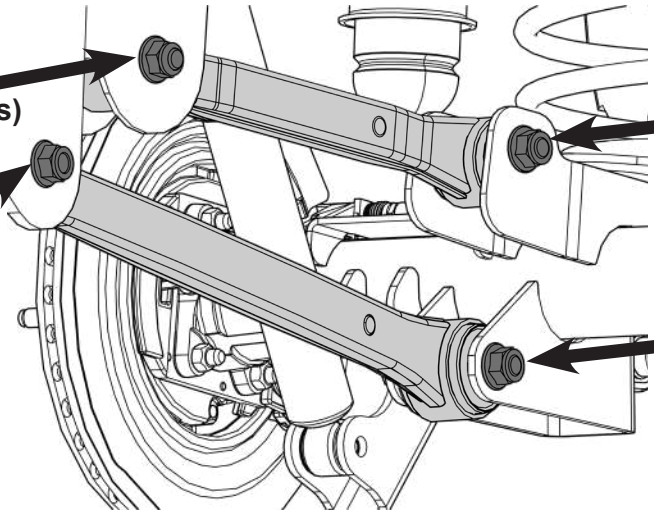

**TORQUE**
111 Ft Lbs + 90°
**(REF: 250-270 Ft Lbs)**

**TORQUE**
111 Ft Lbs + 60°
**(REF: 200-220 Ft Lbs)**

BOLTS 21mm
NUTS 24mm

**FRONT**

**TORQUE 18mm**
37 Ft Lbs + 135°
**(REF: 100-120 Ft Lbs)**

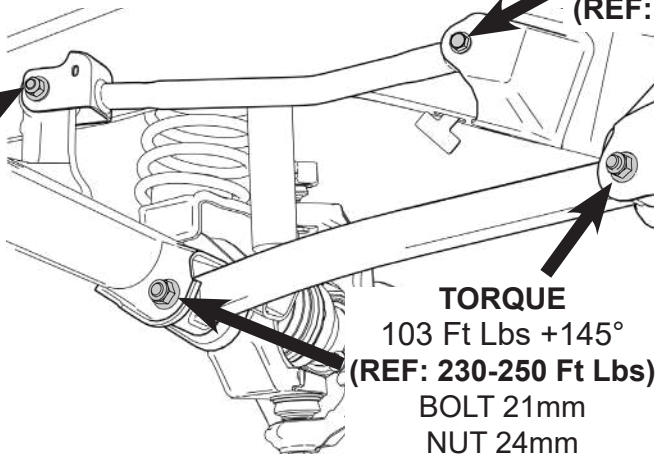

**TORQUE 18mm**
41 Ft Lbs + 185°
**(REF: 140-160 Ft Lbs)**

**TORQUE**
103 Ft Lbs +145°
**(REF: 230-250 Ft Lbs)**
BOLT 21mm
NUT 24mm

41

# JT TIRE CLEARANCE GUIDE (for vehicles with FACTORY FENDER FLARES)

By limiting suspension up travel, TeraFlex Bump Stops allow the use of larger tires while keeping the factory fenders.

JT Rubicon models feature high-clearance fenders that allow for more up travel, while the lower-clearance fenders on JT Sport and Overland restricts tire size due to fender rubbing.

In order to address these fender differences, TeraFlex designed a proprietary modular bump stop system, which can be adapted to fit several different lift height and tire size configurations.

Additional 0.5" interlocking spacers can be added to fine tune bump stop height and further limit suspension up travel.

## JT RUBICON
with Factory Fender Flares:

### 1.5" LEVELING KIT

- 35" - 1” Front & No Rear Bump Stop*




**NO REAR BUMP STOP***

*For vehicles with TERAFLEX Nomad Wheels, add 0.5” Bump Stop to the rear axle.

### 2.5" LIFT KIT

- 35" - 2" Front & 1" Rear Bump Stops

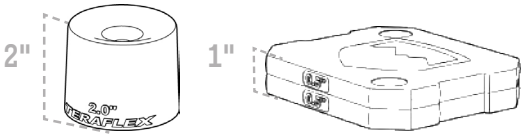


### 3.5" LIFT KIT

- 37" - 2" Front & 2.5" Rear Bump Stops

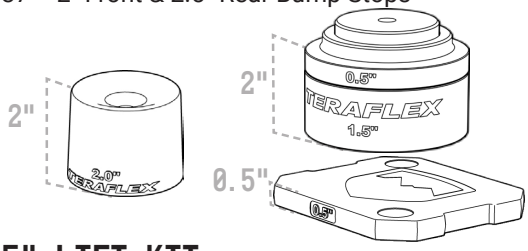


### 4.5" LIFT KIT

- 37" - 2" Front & 2.5" Rear Bump Stops

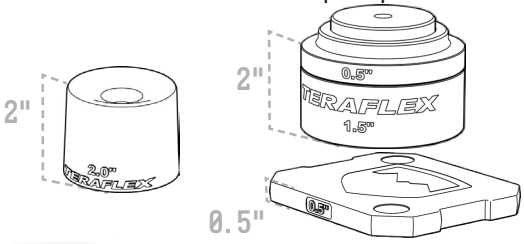


## JT SPORT/OVERLAND
with Factory Fender Flares:

### 1.5" LEVELING KIT

- 33" - 1” Front & No Rear Bump Stop*




**NO REAR BUMP STOP***

*For vehicles with TERAFLEX Nomad Wheels, add 0.5” Bump Stop to the rear axle.

### 2.5" LIFT KIT

- 35" - 2" Front & 1" Rear Bump Stops

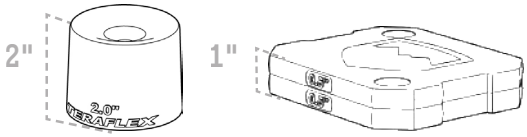


### 3.5" LIFT KIT

- 35" - 2" Front & 2.5" Rear Bump Stops

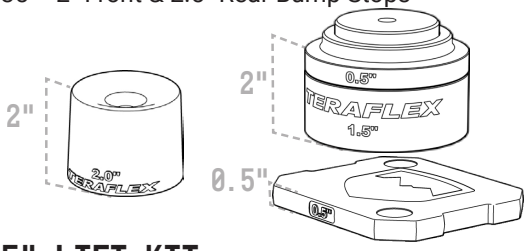


### 4.5" LIFT KIT

- 35" - 2" Front & 2.5" Rear Bump Stops

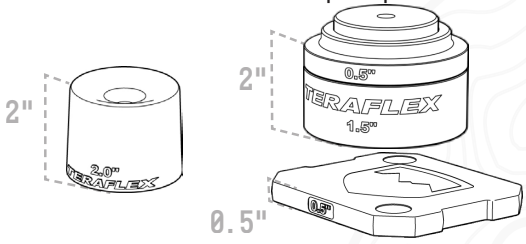


TERAFLEX

*Recommended Bump Stop configuration based on tested tires. Not all Tires Measure the Same. Cycling the suspension to check the shocks, springs and other suspension componets before driving is recommended.*

## 3.5”-4.5” Inch Shock Options

**JT Falcon Electronic Adjustable PiggyBack Shocks**
- 4 Door Series 3.5, 14-04-35-400-200

*Electrically Adjustable
*3/4” Chrome Shaft
*Offset Sleeve Design
*PiggyBack Reservoir

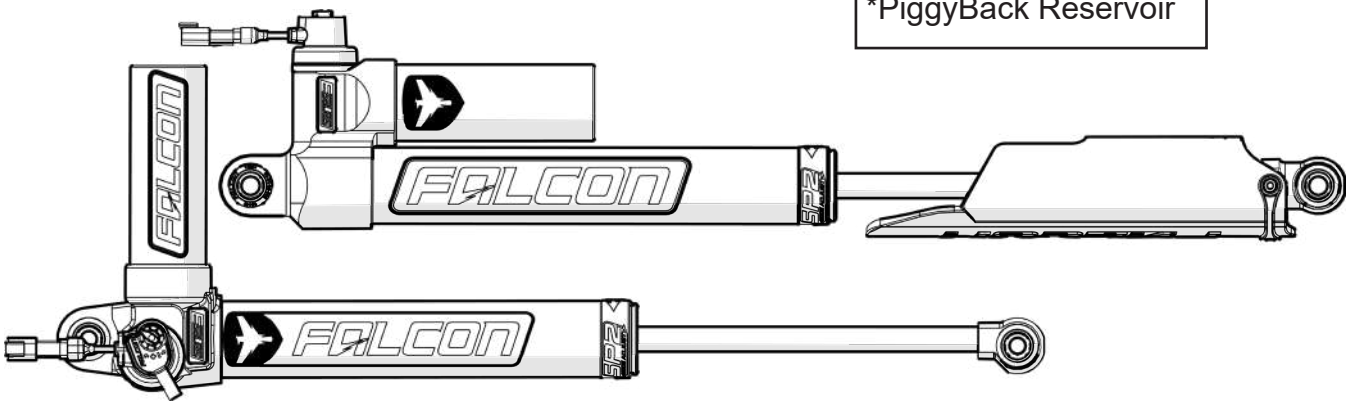


**JT Falcon Adjustable PiggyBack Shocks**
- 4 Door Series 3.3, 14-02-33-400-200

*Fast Adjust Knob
*High Flow Oil Channel
*Offset Sleeve Design
*PiggyBack Reservoir

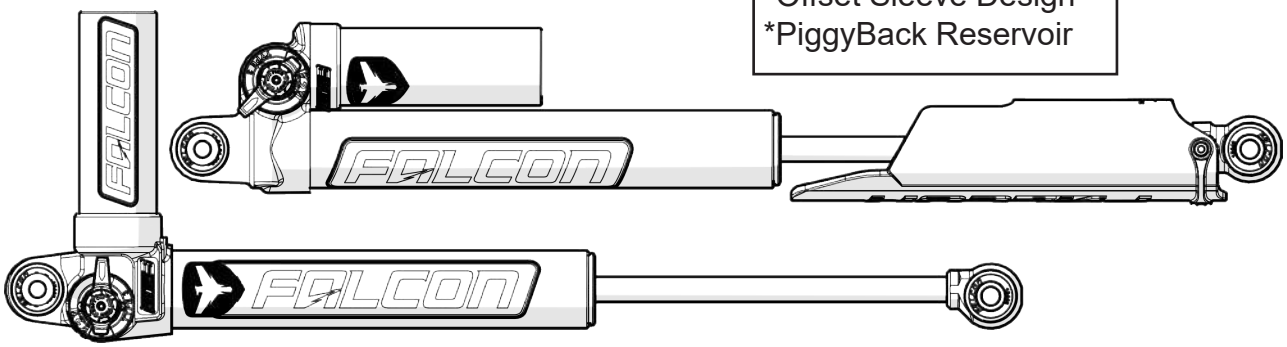


**JT Falcon PiggyBack Shocks**
- 4 Door Series 3.1, 14-02-31-400-200

*Series 3.3 Upgradable
*High Flow Oil Channel
*Offset Sleeve Design
*PiggyBack Reservoir

