Longest wheel base 50"
Shortest wheel base 37"

27" Total Ratcheting Arm Length
18" Total Ratcheting Hook

7.5" from hitch pin to closest part of the rack when folded

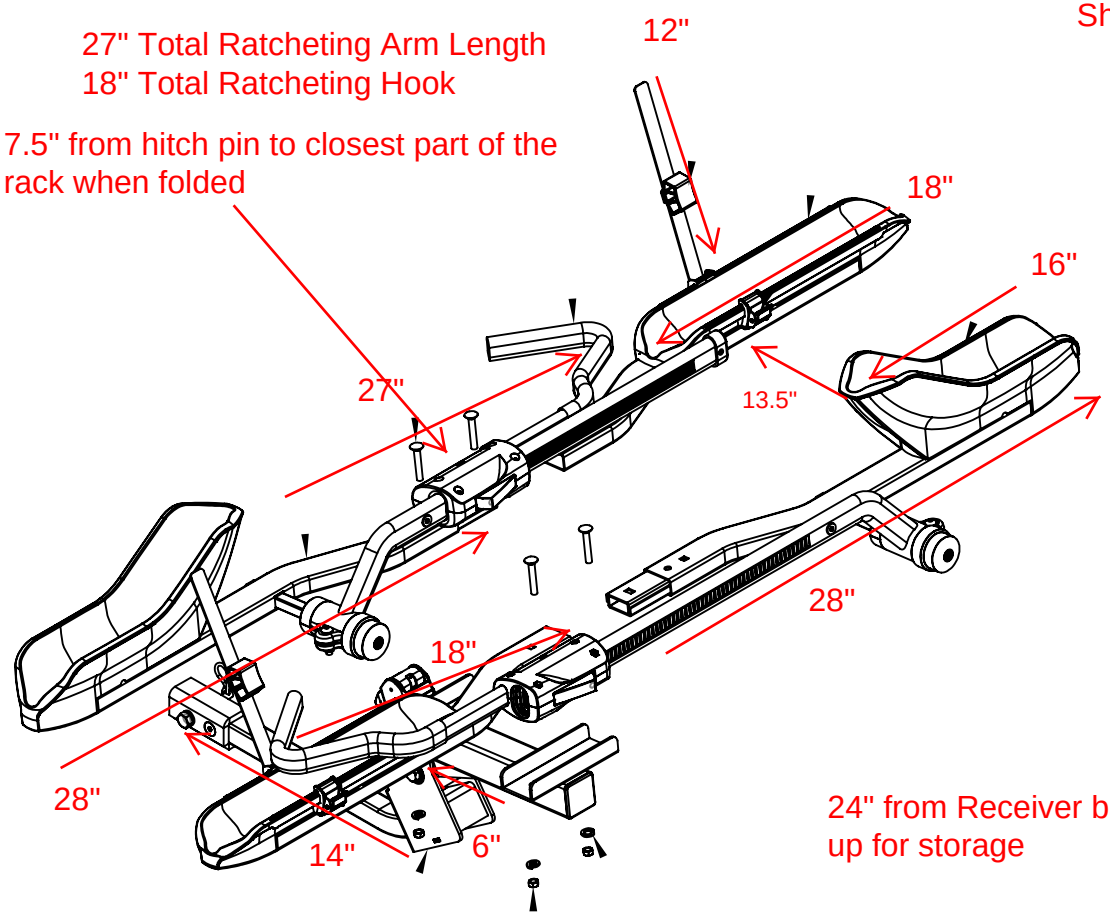

24" from Receiver bar to the top of the rack when folded up for storage