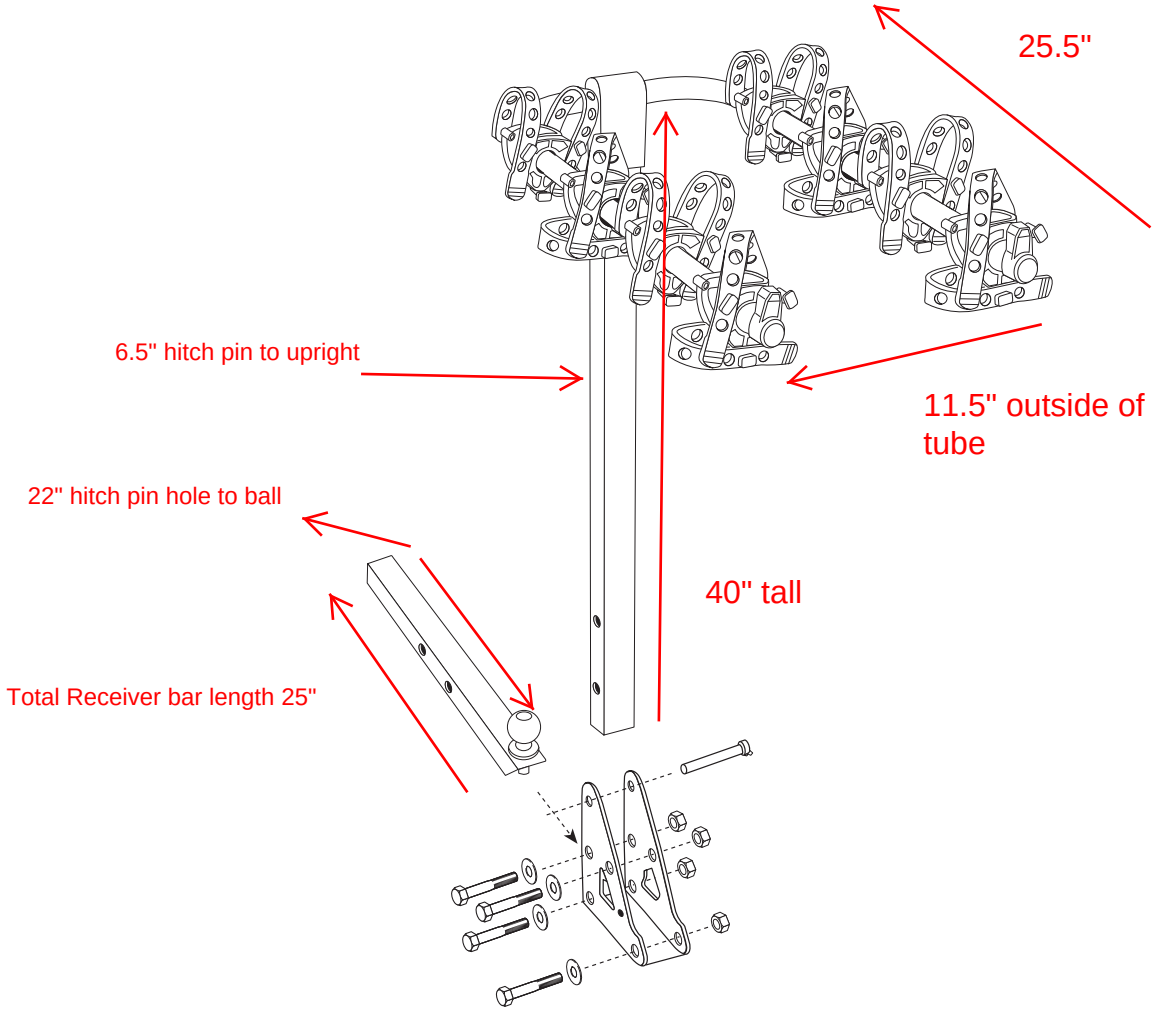
25.5"
6.5" hitch pin to upright
11.5" outside of tube
22" hitch pin hole to ball
40" tall
Total Receiver bar length 25"