PART NO. 24180

ADJUSTABLE CAMBER/CASTER SLEEVE FOR FORD/DODGE - INSTRUCTION SHEET

This part should only be installed by personnel who have the necessary skill, training and tools to do the job correctly and safely. Incorrect installation can result in personal injury, vehicle damage and / or loss of vehicle control.

INSTRUCTIONS

1. Remove the existing bushing. Install a #23199 zero degree bushing and make a caster sweep to determine amount of change needed.

   Note: The use of a zero degree sleeve will make it much easier to determine the correct caster/camber change needed.

2. Refer to the correct chart for your vehicle.
3. Find desired caster change needed noting passenger and driver side and whether positive or negative change.
4. Find desired camber change needed noting positive and negative change.
5. The intersection of these two readings will give the letter code needed to give the desired change.
6. The upper letter(s) are for inner sleeve adjustment and the lower letter(s) are for the installation reference point.
7. Adjust the inner sleeve with SPC wrenches **#74400** and **#74500** so the selected upper letter(s) code from the chart is lined up with the slot in the outer sleeve.
8. Remove the zero degree bushing. Install the new bushing so the selected lower letter(s) code from the chart is aligned with the slot in the knuckle assembly. (Middle of pinch bolt)
9. Make sure the new bushing is firmly seated, install snap ring if equipped, and torque the pinch bolt to 55-65 ft. lbs.

   Always check for proper clearance between suspension components and other components of the vehicle.

10. Adjust toe and recheck alignment.

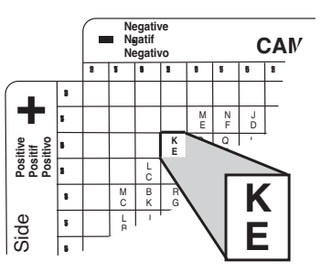

Example Only!!!
'K' Upper Letter
'E' Lower Letter

'**K**' Lined-up with the slot in the outer bushing
Upper Letter

'**E**' Lined-up with the slot in the axle
Lower Letter

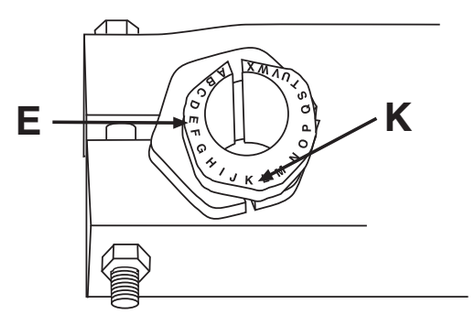

Specialty Products Company®

Negative ▬ **Camber** Positive ✚

Driver Side Left Caster	-2.50°	-2.25°	-2.0°	-1.75°	-1.50°	-1.25°	-1.0°	-.75°	-.50°	-.25°	0	+.25°	+.50°	+.75°	+1.0°	+1.25°	+1.50°	+1.75°	+2.0°	+2.25°	+2.50°	Passenger Side Right Caster
+2.50°								L-M E-F	M-N F-G	L F	M G	N H	L-M G-H	M-N H-I								-2.50°
+2.25°						M E	N F	J D	P H	I D	J E	I E	J F	K G	L H	M I						-2.25°
+2.0°					L D	J C	I C	H B-C	H C	H C-D	H D	R J-K	H E	I F	J G	J G-H	N J					-2.0°
+1.75°				M D	I B	I-J B-C	H B	G-H B	G B	S-T J-K	G C-D	F-G C-D	G D-E	G E	H F	I G	J H	M J				-1.75°
+1.50°			N D	J B	H A	R G-H	G A	T I-J	T J	F B	E-F B-C	T L	F D	F-G E	G E-F	G-H F-G	H G	I H	L J			-1.50°
+1.25°		M C	P E	I A	H X-A	F-G X	F X	E-F X	U J-K	E A	E B	E B-C	E C-D	E-F D-E	T N	G F-G	H G-H	H-I H	J I	M K		-1.25°
+1.0°		L B	J A	H X	G W-X	F W	E-F W	E W-X	D-E W-X	D X	D A	D B	D-E C	E D-E	E-F E	F F	G G	H H	I I	N L		-1.0°
+.75°	M-N B-C	K A	I X	G-H W	F V-W	E-F V-W	U H-I	V J	C-D V	W M	C W-X	C A	C-D C	V P	E E-F	T-U O-P	T O-P	R-S O	H-I I	J J	L-M K-L	-.75°
+.50°	M-N B	J X	H W	G V-W	F V	E U-V	U-V H-I	C-D U	C T-U	B T	A S	B X	B-C B	C-D D	D E-F	U P-Q	T P	G H	H I	J J-K	K K	-.50°
+.25°	N B	I W	R D-E	G V	E-F U	E T-U	D T	C S	B R	A P		A V	B B	W S	D F	E G	F H	S P	H I-J	I J	L L	-.25°
0°	M A	I-J W	H V	F-G U	T-U E-F	F T-U	D S	C Q	A M				A A	W U	D G	F H-I	T-U Q-R	S Q	H J	P-Q O	M M	0°
-.25°	L X	I V	H U-V	S D	F T	E S	D R	W G	B N	A J		A D	B E-F	C G	D H	E H-I	T R	G J	R P-Q	I K	N N	+.25°
-.50°	K W	P B	H U	G T	T D	E R-S	D-E Q-R	C-D P	C O	B L	A G	B H	C I	C-D I	U-V T-U	E I-J	F J	G J-K	H K	J L	O O	+.50°
-.75°	L-M W-X	J V	H T-U	G-H T	T C-D	E-F R	E Q-R	D P	V-W D	C M	C K-L	W A	C-D J	V V	U T-U	E-F J-K	F-G K	R-S R	I L	P P	M-N N-O	+.75°
-1.0°		N X	I U	H T	G S	F R	E-F Q	D-E P	D O	D N	D M	D L	D-E K-L	E K-L	E K	F K	G K-L	H L	J M	L N		+1.0°
-1.25°		M W	J U	H-I T	G-H S	F-G R	F Q	E-F P-Q	E O-P	E N-O	E N	U W-X	U V-W	T-U U-V	T U	G L-M	H L-M	I M	J M-N	M O		+1.25°
-1.50°			L V	J T-U	H S	G-H R-S	G Q-R	F P-Q	F P	T X	E-F N-O	F N	E-F M	T U-V	G M	R-S S-T	H M	J N	N P			+1.50°
-1.75°				M V	J T	I S	H R	G Q	G P-Q	F-G O-P	G O-P	S-T V-W	G N	G-H N	H N	H-I N	I N	M P				+1.75°
-2.0°					N V	J S-T	J S	I R	H Q	R V-W	H P	H O-P	H O	H-I O	I O	J O	L P					+2.0°
-2.25°						M U	L T	P V	J R	I Q	I-J Q	I P	P T	J P	N R	M Q						+2.25°
-2.50°								M-N T-U	M-N X-A	N T	M S	L R	M-N R-S	L-M Q-R								+2.50°
	-2.50°	-2.25°	-2.0°	-1.75°	-1.50°	-1.25°	-1.0°	-.75°	-.50°	-.25°	0	+.25°	+.50°	+.75°	+1.0°	+1.25°	+1.50°	+1.75°	+2.0°	+2.25°	+2.50°	

Negative ▬ **Camber** Positive ✚

Positive ✚ Negative ▬ Driver Side Left Caster / Passenger Side Right Caster Positive ✚ Negative ▬

Part No. 24180 • Applications
Adjustable Camber/ Caster Sleeve for Ford

Ford 2WD *With pinch bolt-style bushings*
87-96 F150 2WD
89-90 Bronco II 2WD
92-12 E150 2WD
88-97 Ranger 2WD
91-94 Explorer 2WD
Mazda 2WD *With pinch bolt-style bushings*
91-94 Navajo 2WD
94-97 B-Series Pickup 2WD

Part No. 24180 • Applications
Adjustable Camber/ Caster Sleeve for Ford

Ford 4WD *With pinch bolt-style bushings*
90 (Late) Bronco II 4WD
90-97 Ranger 4WD
91-94 Explorer 4WD
Mazda 4WD *With pinch bolt-style bushings*
91-94 Navajo 4WD
94-97 B-Series Pickup 4WD

Negative ▬ **Camber** Positive ✚

Driver Side Left Caster	-1.75°	-1.50°	-1.25°	-1.0°	-.75°	-.50°	-.25°	0	+.25°	+.50°	+.75°	+1.0°	+1.25°	+1.50°	+1.75°	Passenger Side Right Caster
+1.75°								M G								-1.75°
+1.50°					K D	O G	K E	I D-E	I E-F	K G	M I					-1.50°
+1.25°			M D	J B-C	I B-C	H B-C	G B-C	G C-D	S K-L	H E-F	H F	P K-L	M J			-1.25°
+1.0°			P E-F	H A	G A	F A	E A	E B	F D	T M	S M	H G	J H-I			-1.0°
+.75°		K A-B	H X	G-H X	T H-I	E X	V L	D A	D B	U N	F E-F	R-S N	H H	O L-M		-.75°
+.50°		K A	H W-X	T G	U H-I	D V	C V	C X	C B	D D	E E-F	F G	G H	O M		-.50°
+.25°		I-J W-X	S E-F	F U-V	D T	C T	B S		B A	C D	V R	T P-Q	G H-I	J J-K		-.25°
0°	M A	J W	G U	T E	D S	C R				C F	V S	T Q	S P-Q	Q O-P	M M	0°
-.25°		K W	G T-U	F S-T	D Q-R	C P	B M		B G	C H	D H	T R-S	S Q-R	O O		+.25°
-.50°		O A	G T	F S	E Q-R	D P	C N	C L	C J	D J	U T-U	T S	R R	K M		+.50°
-.75°		O X-A	H S-T	R-S B	F Q-R	U B-C	D N	D M	V X	E K-L	T T-U	G-H L	H K-L	K M-N		+.75°
-1.0°			J T-U	H S	G R	T A	F O-P	E N	F M-N	F M	G M	H M	P Q-R			+1.0°
-1.25°			M V	O W	H R	H Q-R	S W-X	G O-P	G N-O	H N-O	I N-O	J N-O	M P			+1.25°
-1.50°					M U	K S	I Q	J Q	K Q	O S	K P					+1.50°
-1.75°								M S								+1.75°
	-1.75°	-1.50°	-1.25°	-1.0°	-.75°	-.50°	-.25°	0	+.25°	+.50°	+.75°	+1.0°	+1.25°	+1.50°	+1.75°	

Negative ▬ **Camber** Positive ✚

Positive ✚ Negative ▬ Driver Side Left Caster / Passenger Side Right Caster Negative ▬ Positive ✚

Negative ▬ **Camber** Positive ✚

Driver Side Left Caster	-2.0°	-1.75°	-1.50°	-1.25°	-1.0°	-.75°	-.50°	-.25°	0	+.25°	+.50°	+.75°	+1.0°	+1.25°	+1.50°	+1.75°	+2.0°	Passenger Side Right Caster
+2.0°									M G									-2.0°
+1.75°					M E	N F	J D	I D	J E	J F	K G	L H	M I					-1.75°
+1.50°				K C	O F	Q H	I C	H C	H D	R K	H E	I F-G	K H	L I				-1.50°
+1.25°			L C	J B	H A-B	G-H A-B	S I-J	F B	F B-C	S K-L	G E	H F	Q L	J H	K I			-1.25°
+1.0°		M C	K B	R F-G	G X	F X	U J-K	E A	E B	U M	F D-E	T N	G F	H G-H	O L	M K		-1.0°
+.75°		L B	I X-A	R-S F-G	T H	E W	U J	V L	C W	D B	E D	E E	F F	G-H G-H	Q M-N	N L		-.75°
+.50°		J-K X-A	Q-R E	G H	T G	D U	C U	C V	B V	C A-B	C C	D-E E	F G	S O	H-I I	J J		-.50°
+.25°		I-J W-X	R-S E	T F	U G	D T	C S-R				C D	V R	E G	S P	H I-J	K-L K-L		-.25°
0°	M A	J W	H V	F T-U	E T	D S	B P				B D	D G	E H	T Q-R	R P	P O	M M	0°
-.25°		I V	H U	F-G T	E S	V F	C P				C G-H	D H	E I	T R	R Q	O-P O		+.25°
-.50°		J V	H-I U	S C	F S	D-E Q	D P	C M-N	B J	C J	D J	E J	T S	G K	Q-R Q	P P		+.50°
-.75°		N X	Q A-B	G-H S-T	F R	E Q	E P	D N	D M	D L	U V	E K	T T	R-S R-S	I L-M	L N		+.75°
-1.0°		M W	J U	H S-T	G R	T B	F P-Q	U A	E N	E M	T U-V	F L	G L	Q R	K N	M O		+1.0°
-1.25°			K U	J T	H R-S	H R	G Q	G P	F O	F N	S U	H N	I N	J N	L O			+1.25°
-1.50°				L U	K T	I R-S	H Q	R W	G O	H O	H N-O	Q S-T	O R	K O				+1.50°
-1.75°					M U	L T	O U	J R	J Q	J P-Q	J P	N R	M Q					+1.75°
-2.0°									M S									+2.0°
	-2.0°	-1.75°	-1.50°	-1.25°	-1.0°	-.75°	-.50°	-.25°	0	+.25°	+.50°	+.75°	+1.0°	+1.25°	+1.50°	+1.75°	+2.0°	

Negative ▬ **Camber** Positive ✚

Positive ✚ Negative ▬ Driver Side Left Caster / Passenger Side Right Caster Negative ▬ Positive ✚

Part No. 24180 • Applications
Adjustable Camber/ Caster Sleeve for Ford

Ford 2WD *With pinch bolt-style bushings*
87-96 F250 2WD
92-12 E250, E350 E450, 2WD
00-05 Excursion 2WD
87-02 F350 2WD
99-02 F250 SD 2WD