12V c.c. - D.C.

VA18-AP71/LL-59A
VA18-AP71/LL-42S

SPAL AUTOMOTIVE

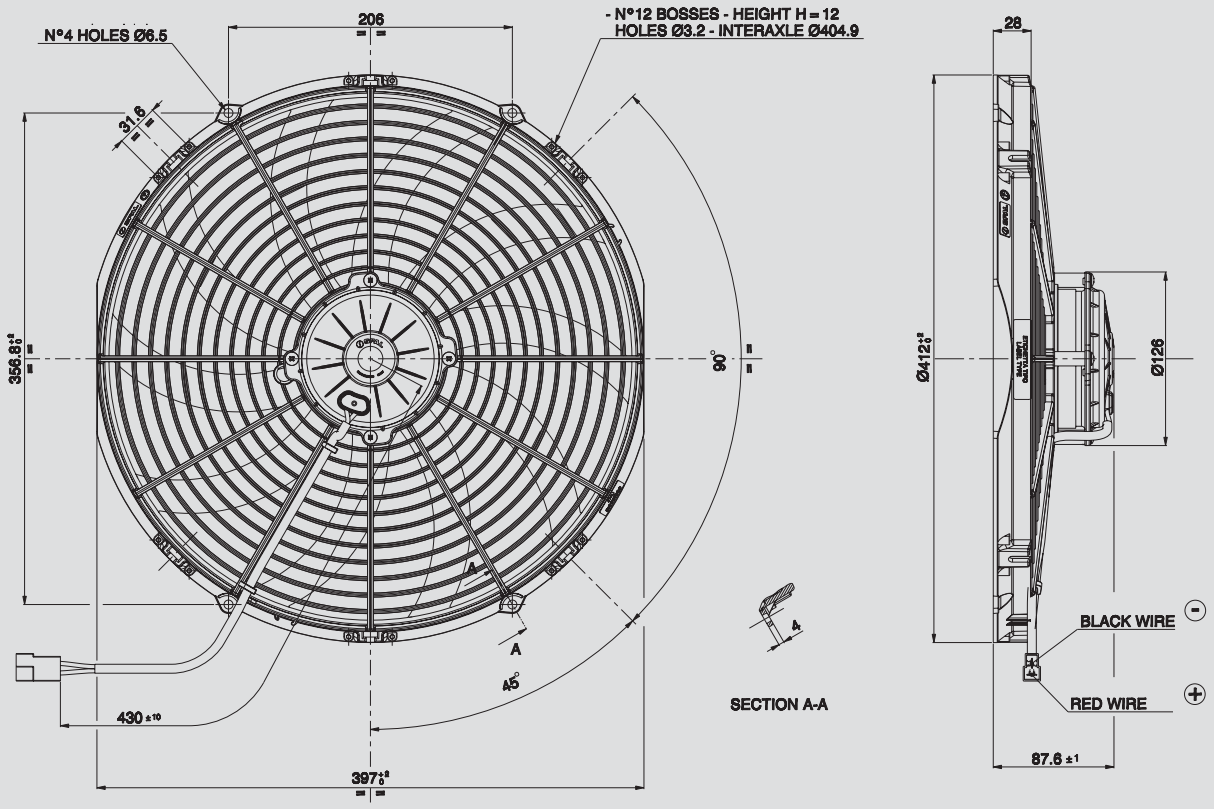

AMP connector Code 180908
AMP terminal Code 42098-2
Suggested mounting torque: 3(+1/-0) Nm with screw M5
Weight 2,57 Kg. approx.

∅ 385 mm
∅ 16”

Static pressure mm H_2O	suction Airflow m³/h	suction Current input A	suction Airflow CFM	blowing Airflow m³/h	blowing Current input A	blowing Airflow CFM	Static pressure inH_2O
0	3430	19,5	2024	3320	21,5	1959	0
2,5	3300	19,9	1947	3030	21,6	1788	0,1
5	3090	20,5	1823	2770	21,8	1634	0,2
7,5	2840	20,2	1676	2500	21,8	1475	0,3
10	2510	21,0	1481	2090	21,5	1233	0,4
12,5	2170	20,3	1280	1700	20,8	1003	0,5
15	1600	19,3	944	1200	20,2	708	0,6
17,5	1030	18,0	608	530	20,5	313	0,7
20	660	17,7	389	0	20,6	0	0,8
25	0	18,0	0				1

PRODUCT FEATURES

Waterproof motor, IP 68	✓
Low noise	✓
Long life	✓
VLL version*	✓
Waterproof connector	✓
Accessories: all the fixing kits	✓

* for OEM applications only.

✓ = Standard feature

✓ = Avaliable upon request

Test voltage 13 V. d.c.

Learn more about engine cooling on our website.