Cod.	Type		Fan diameter
3010.0435	**VA11 - AP7/C - 57A**	*Suction*	**255 mm**
3010.0320	**VA11 - AP7/C - 57S**	*Blowing*	

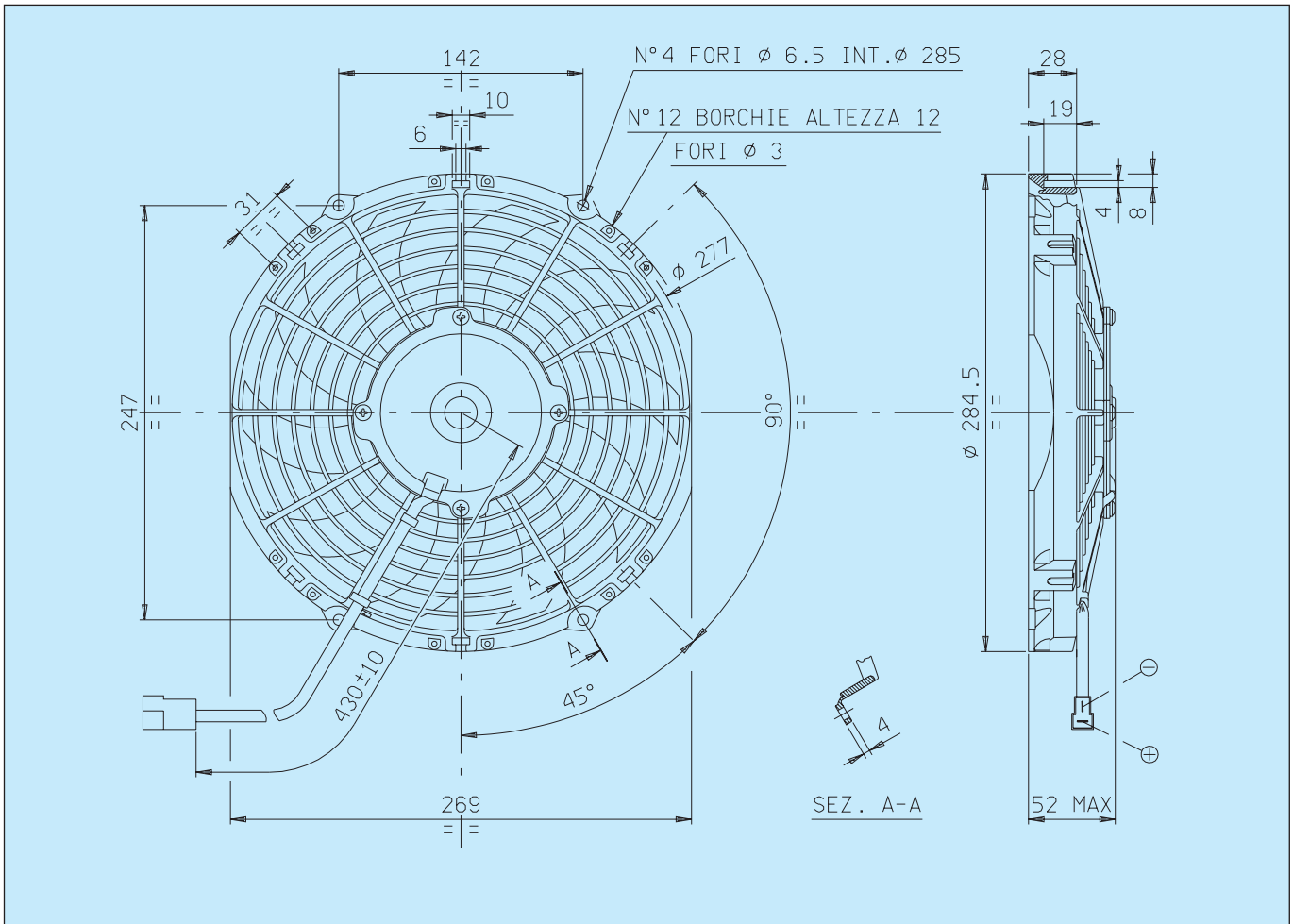

Plastic connector AMP Cod.180908 - Male flat AMP Code 42098 - 2

Test voltage 13 V DC

Static pressure mm H_2O	*Airflow* m^3/h	*Current input* A
0	1350	8,0
2,5	1300	8,3
5	1200	8,6
7,5	1100	9,0
10	950	9,2
12,5	800	9,5
15	650	9,3
17,5	350	9,0
20	150	8,5
25	0	8,7

Static pressure: 1 mm H_2O = 0,04 in. H_2O
Airflow: 1 m^3/h = 0,59 cfm

** Weight 1,000 Kg. approx.*

** Waterproof motor, IP 68*

** Long life*

** Available also in LL and VLL versions for OEM applications only.*

** Available accessories: all the fixing kits.*

** Low noise fan*