ROLL•N•LOCK®

Installation Guide
2014+ Chevrolet Silverado / GM Sierra

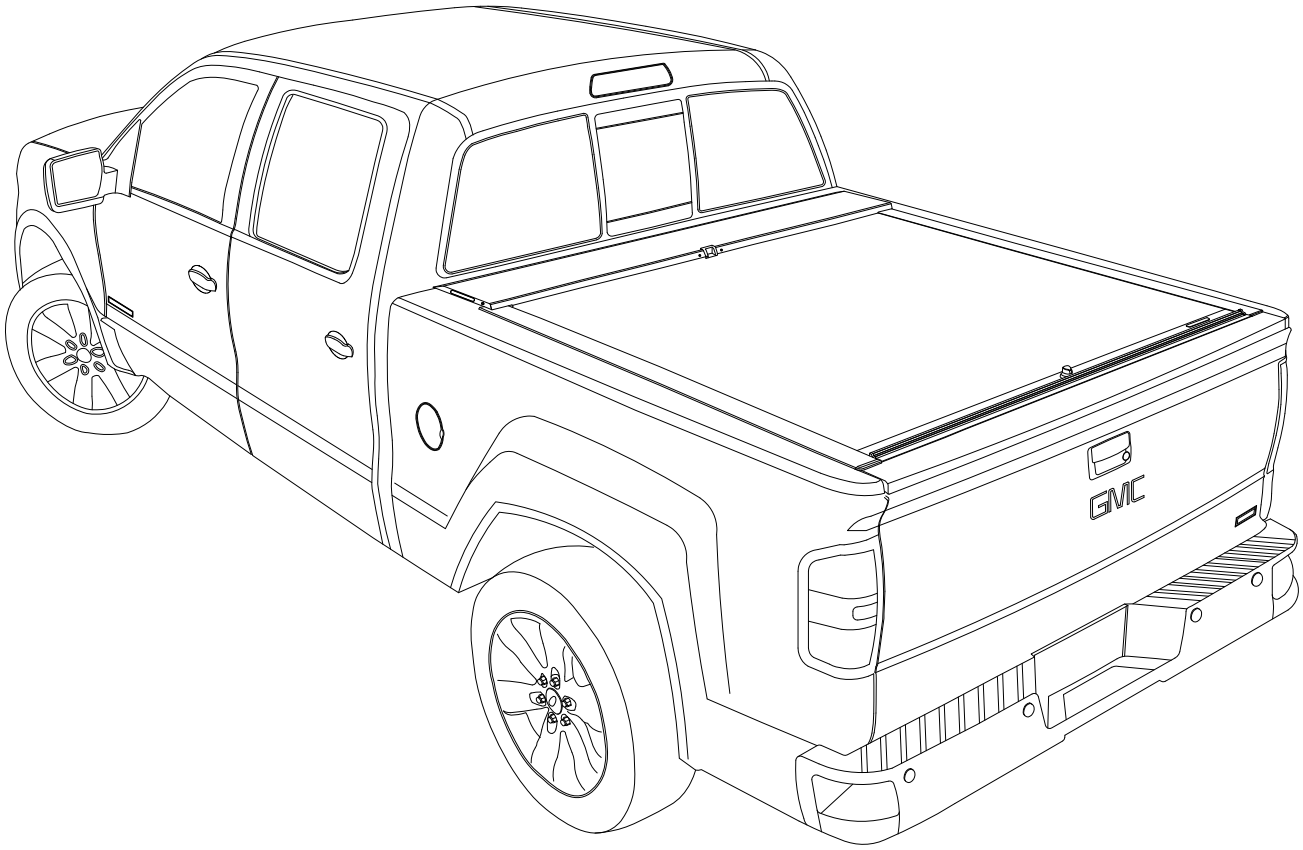

Product Codes:
220 - 221 - 222

Parts List

Item	Part Name	Qty.	Item	Part Name	Qty.	Item	Part Name	Qty.
A	Housing	1	K	Allen Wrench (1/4")	1	U	1/4" Lock Washer	2
B	Track	2	L	Allen Wrench (3/16")	1	V	#10-24 Screw	2
C	Tailgate Extrusion	1	M	Butyl Caulk Strip	2	W	#8x3/4" Self Tap Screw	7
D	Cargo Shield	1	N	Shim	4	X	1/4-20 x 3/8" Screw	4
E	Housing Bracket	2	O	1/4-20 x 1" Bolt	4	Y	Rubber Washer	4
F	Drain Tube	2	P	1/4" Flat Washer	4	Z	1/4" Lid Screw	2
G	CB Track Bracket	2	Q	Nylon Retaining Washer	4	AA	NT Striker Plate	2
H	"CM" Bed Clamp	4/6	R	5/16" Socket Cap Screw	4/6	BB	Hook Latch Cap	2
I	Threaded Tang	4	S	5/16" Lock Washer	4/6		303 Vinyl Protector	1
J	Cargo Nut	2	T	1/4" Socket Cap Screw	2			

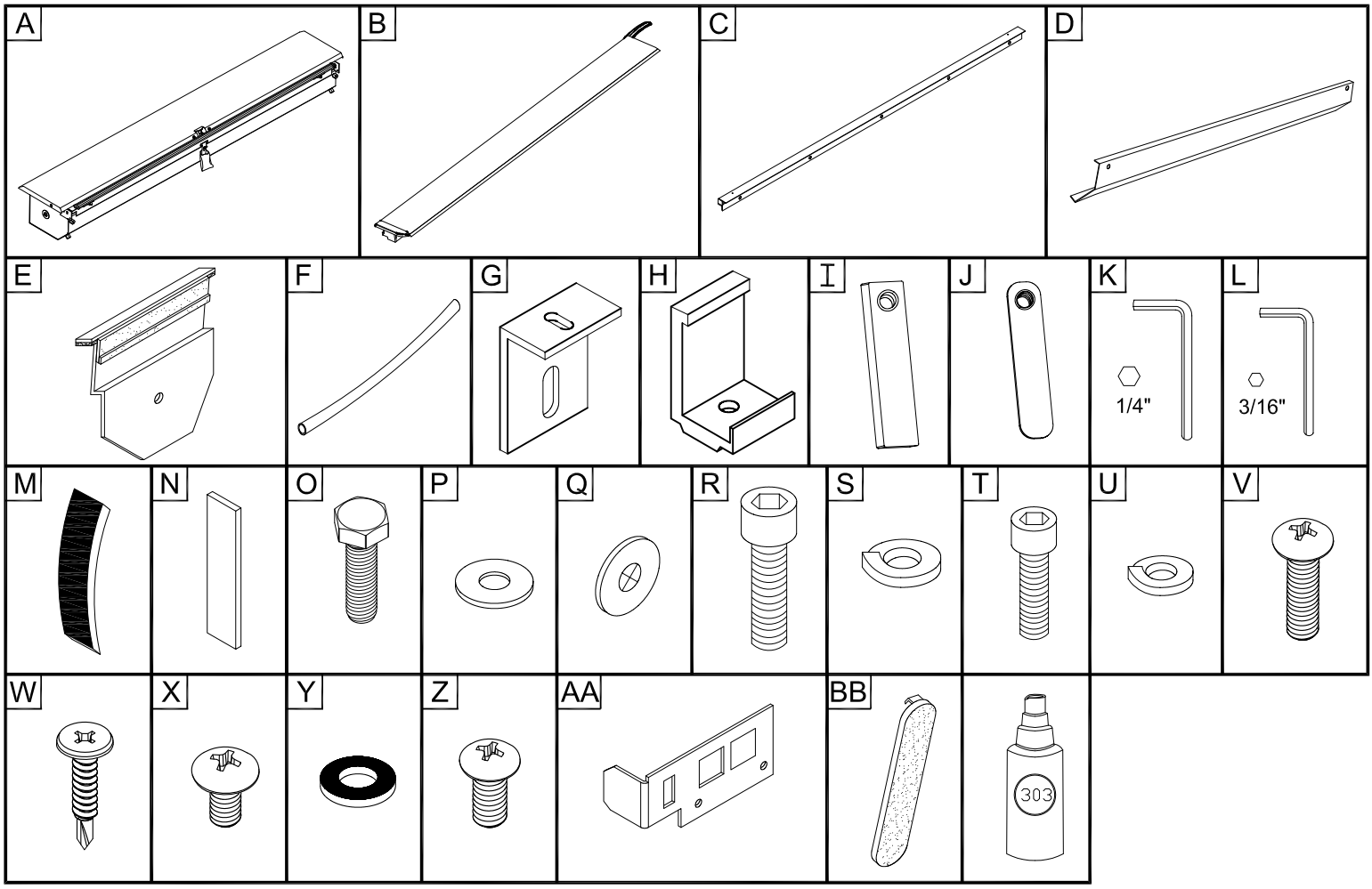

Tools Needed

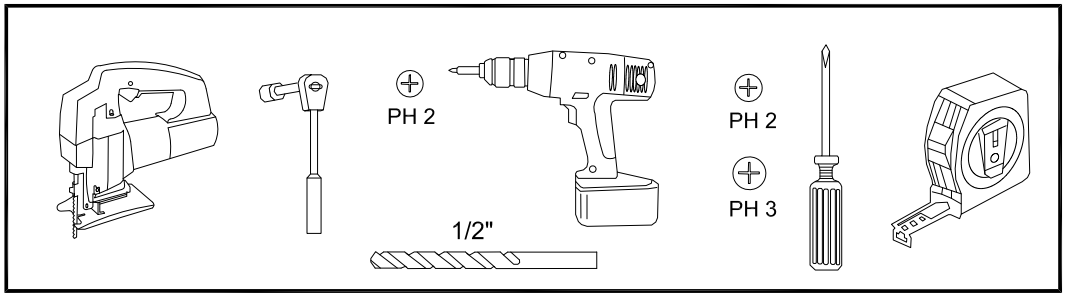

Warning

If your vehicle is equipped with the Endgate Dampener, its performance will be reduced with the addition of this Tonneau. Upon unlatching, the Endgate will fall open to the full open position more quickly then without the Tonneau installed.

⚠ Caution ⚠

This Tonneau Cover may retract to the full open position very quickly resulting in any objects placed on top of the Tonneau Cover to fall off the Tonneau or become trapped inside of the Tonneau carrier. Do not place ANY objects on top of the Tonneau Cover when attempting to close. Failure to follow the instruction may result in damage to your vehicle, belongings or Tonneau Cover. To avoid injury keep all body parts clear of Tonneau Cover and carrier when opening.

1a

If no plastic bedliner present proceed to page 5 - Step 1

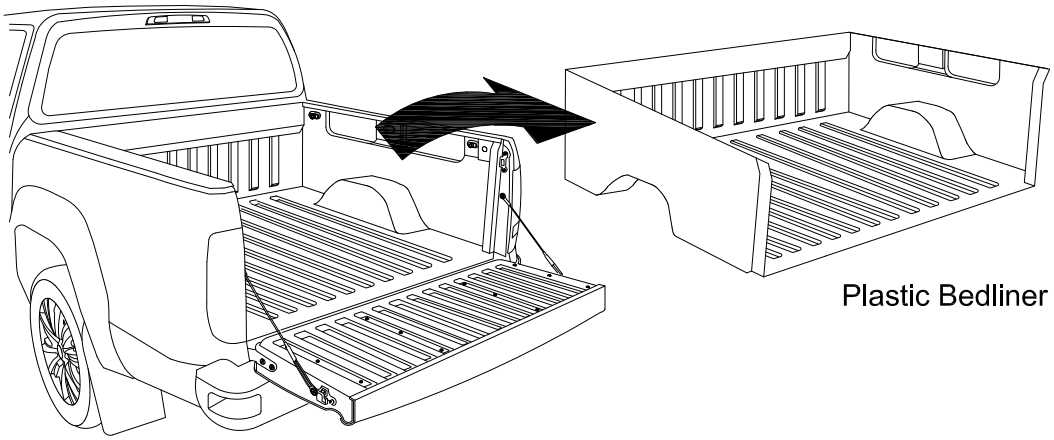

1b

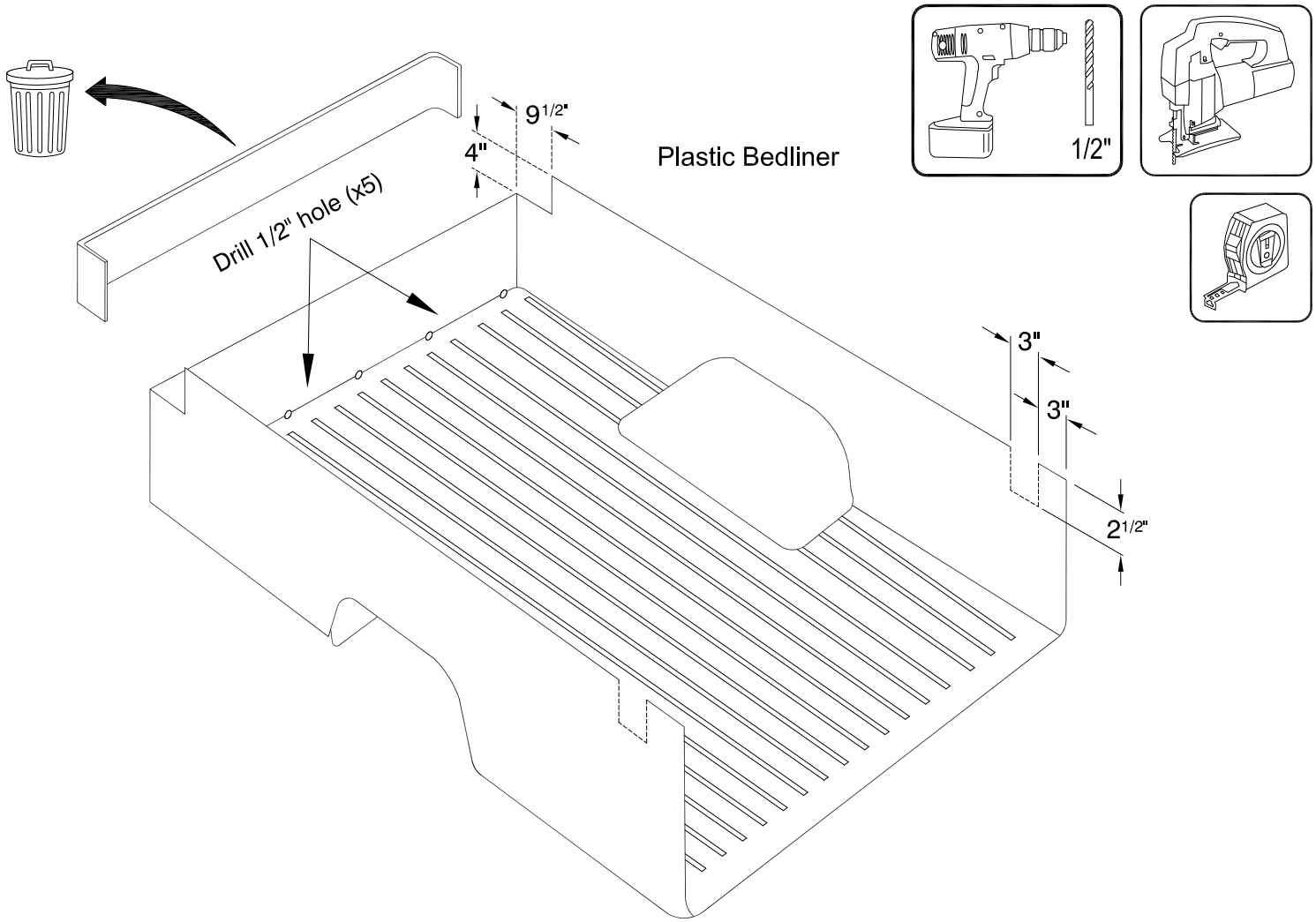

1c

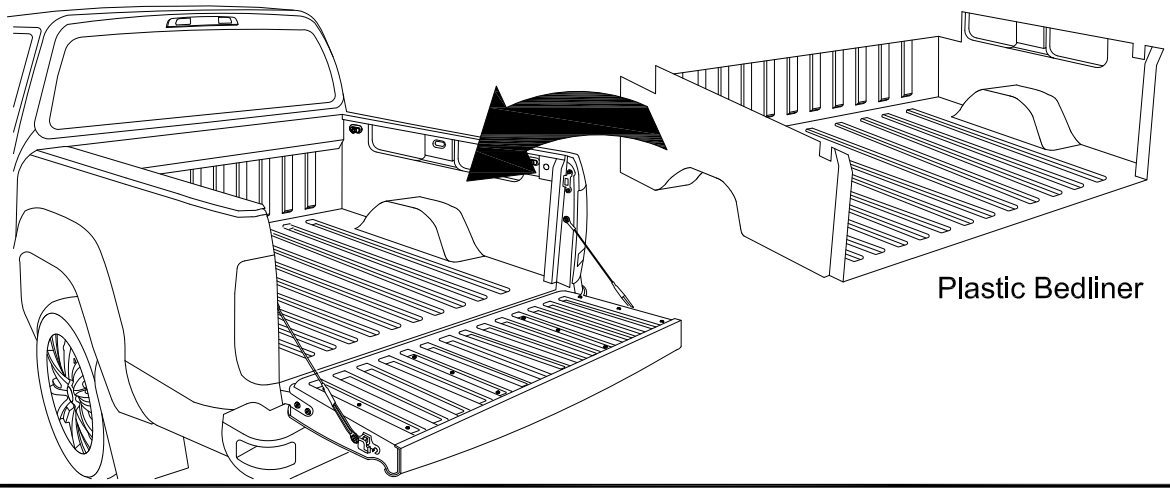

1 LHS = RHS

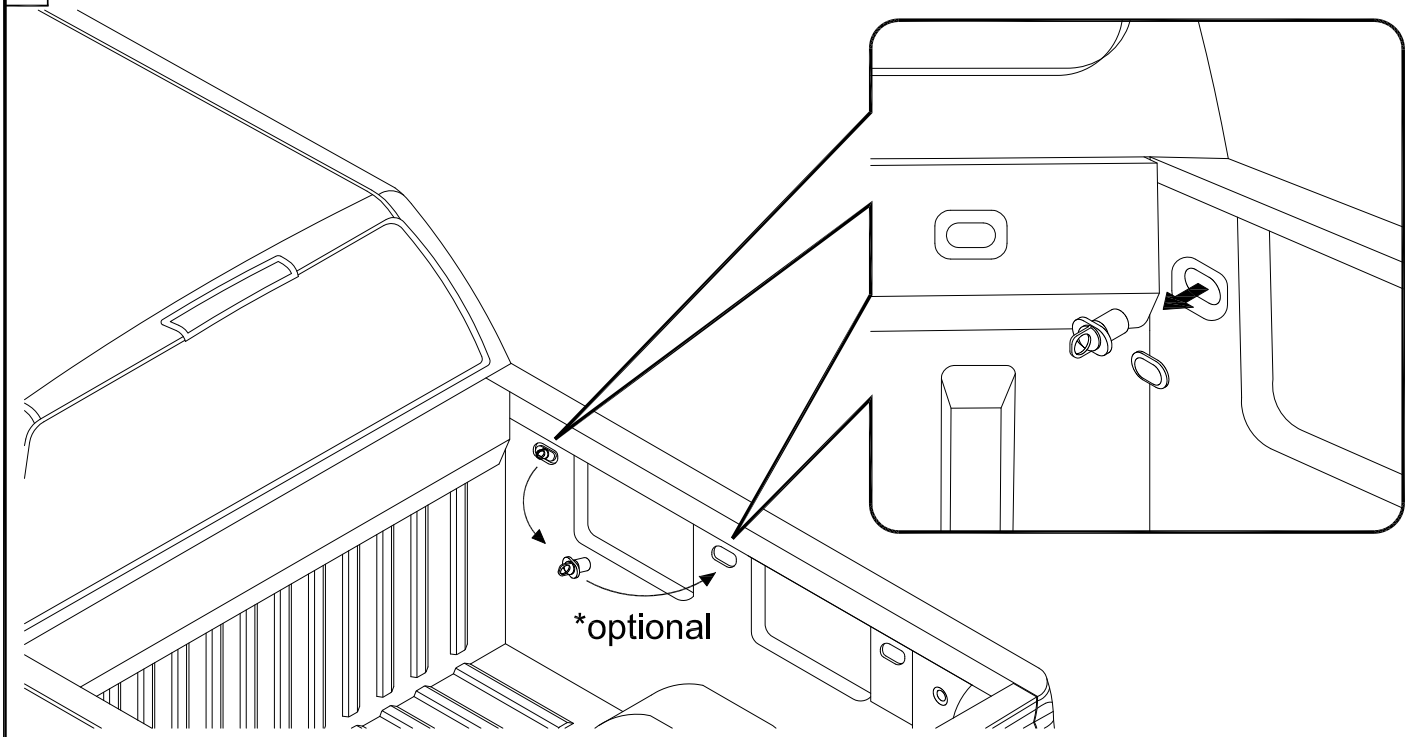

2 LHS = RHS

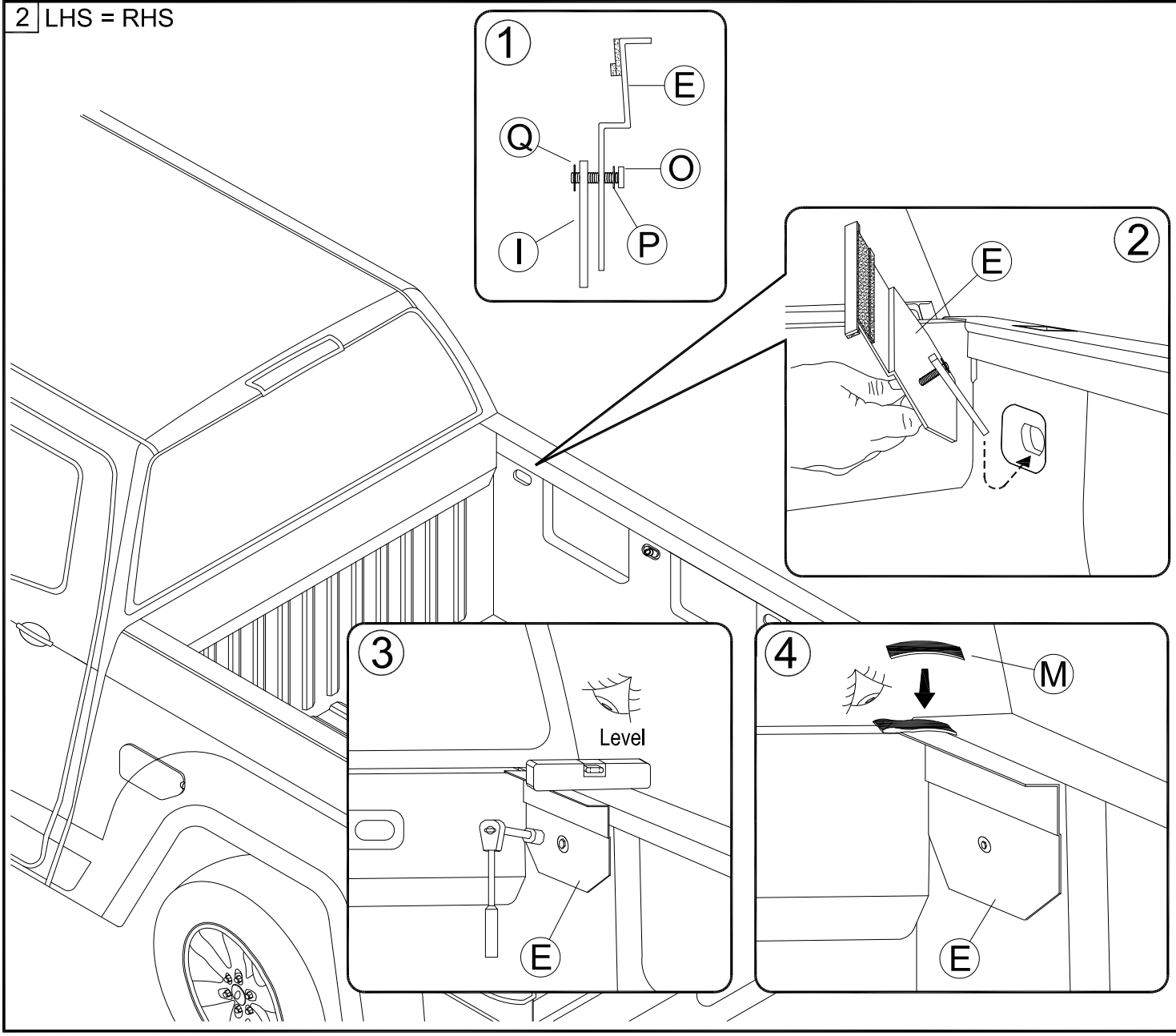

3

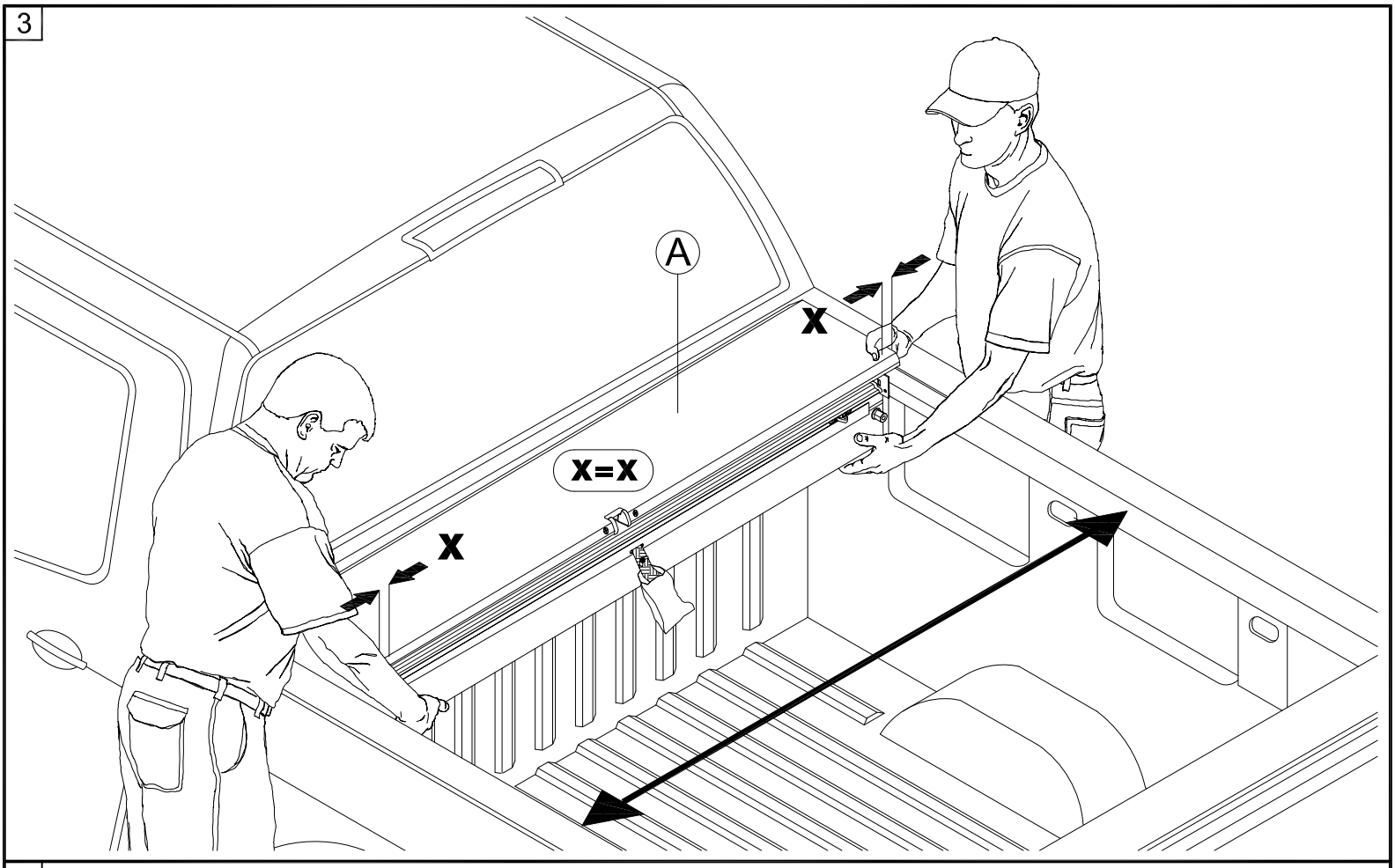

4 LHS = RHS

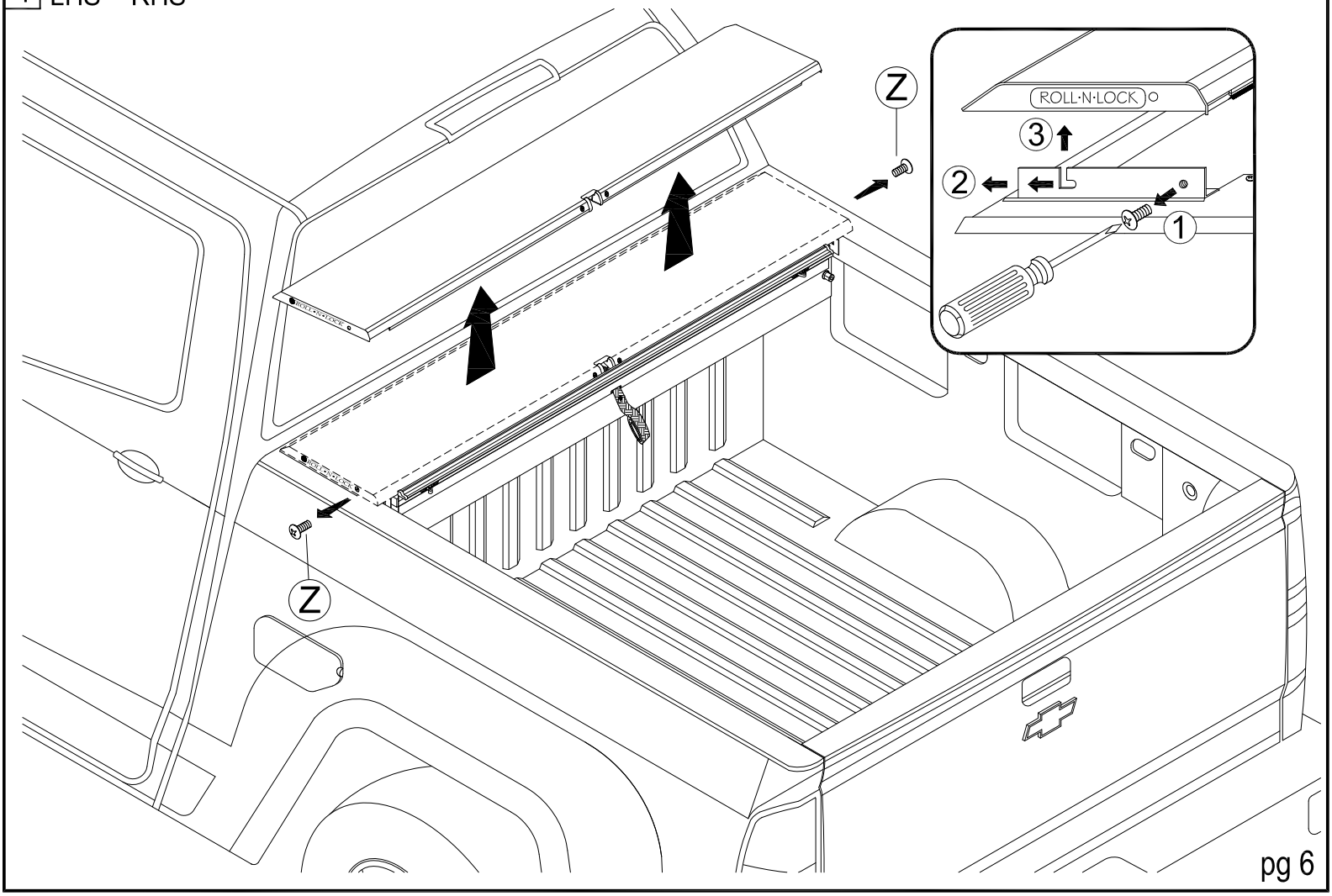

5 LHS = RHS

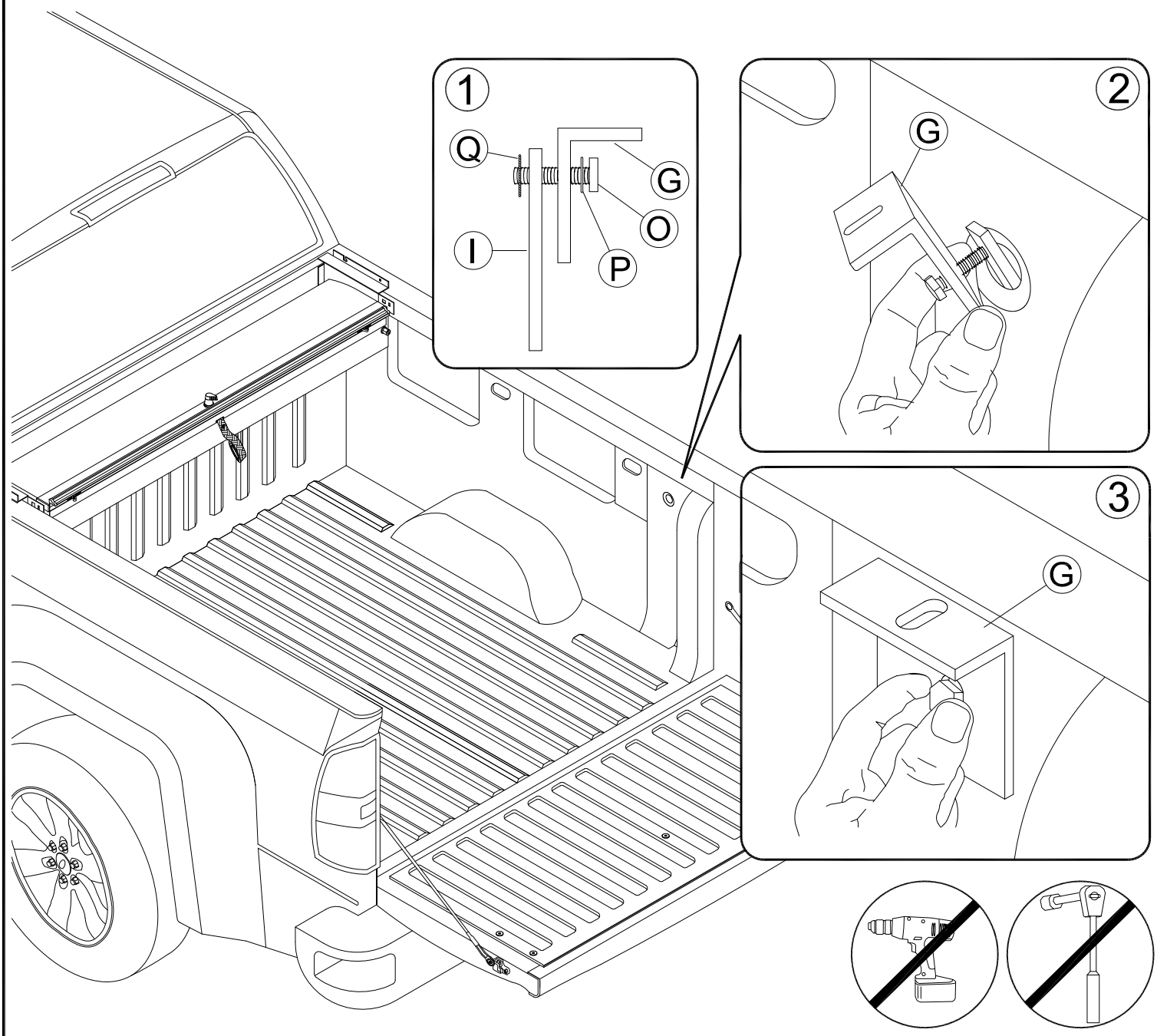

See supplemental instructions attached
to the Tailgate Extrusion - part Ⓒ

6 LHS = RHS

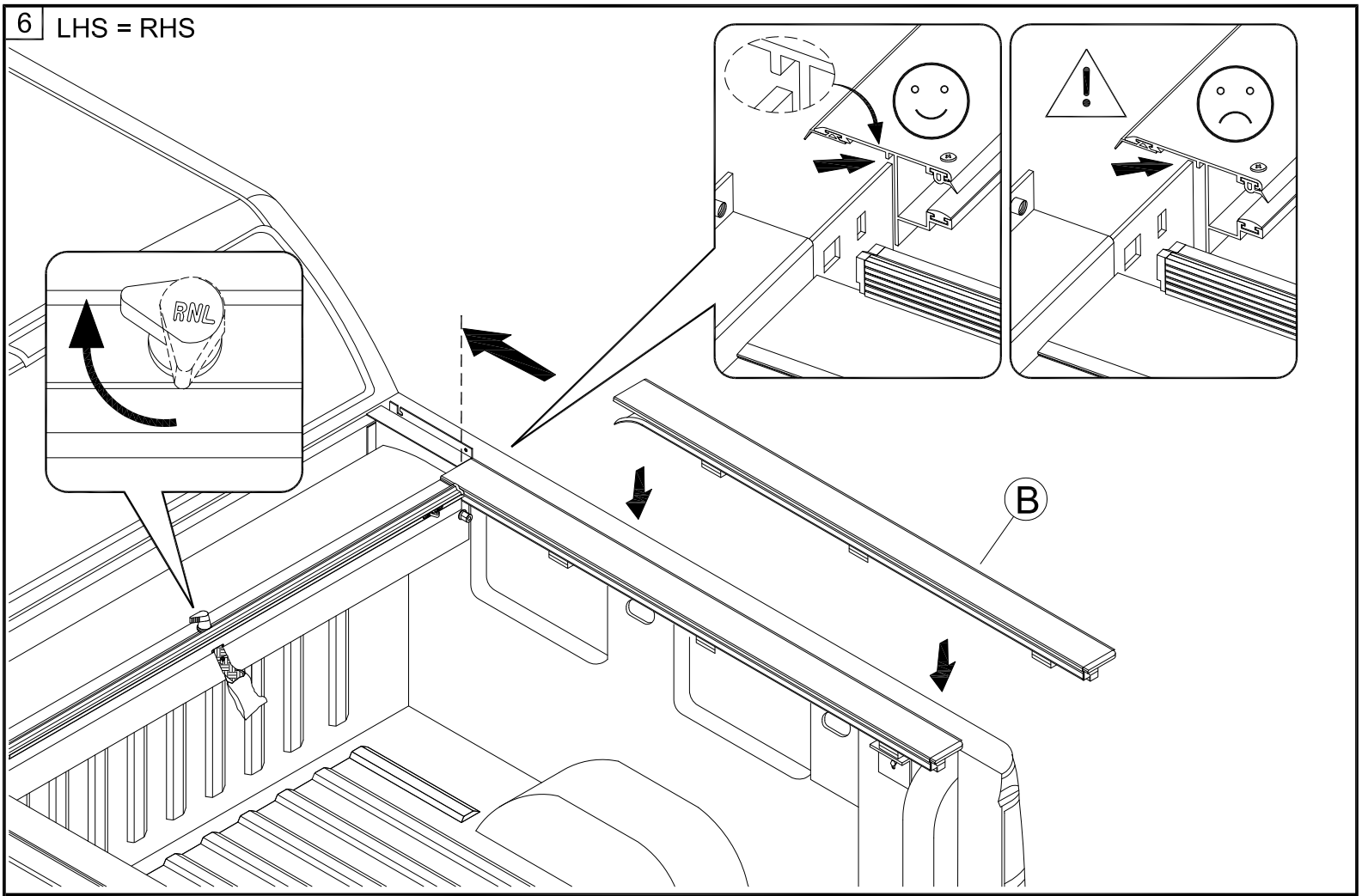

7 LHS = RHS

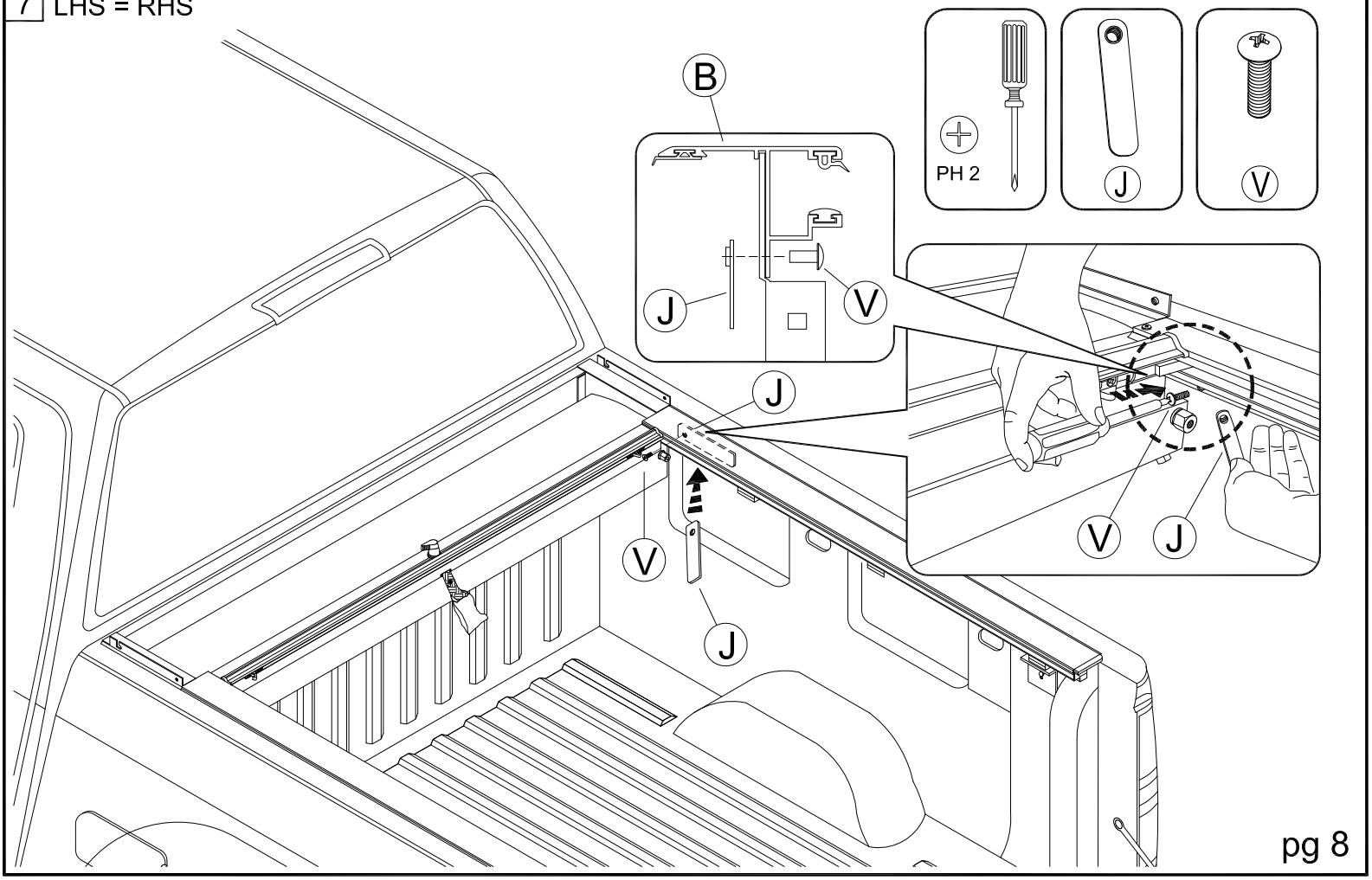

8 LHS = RHS

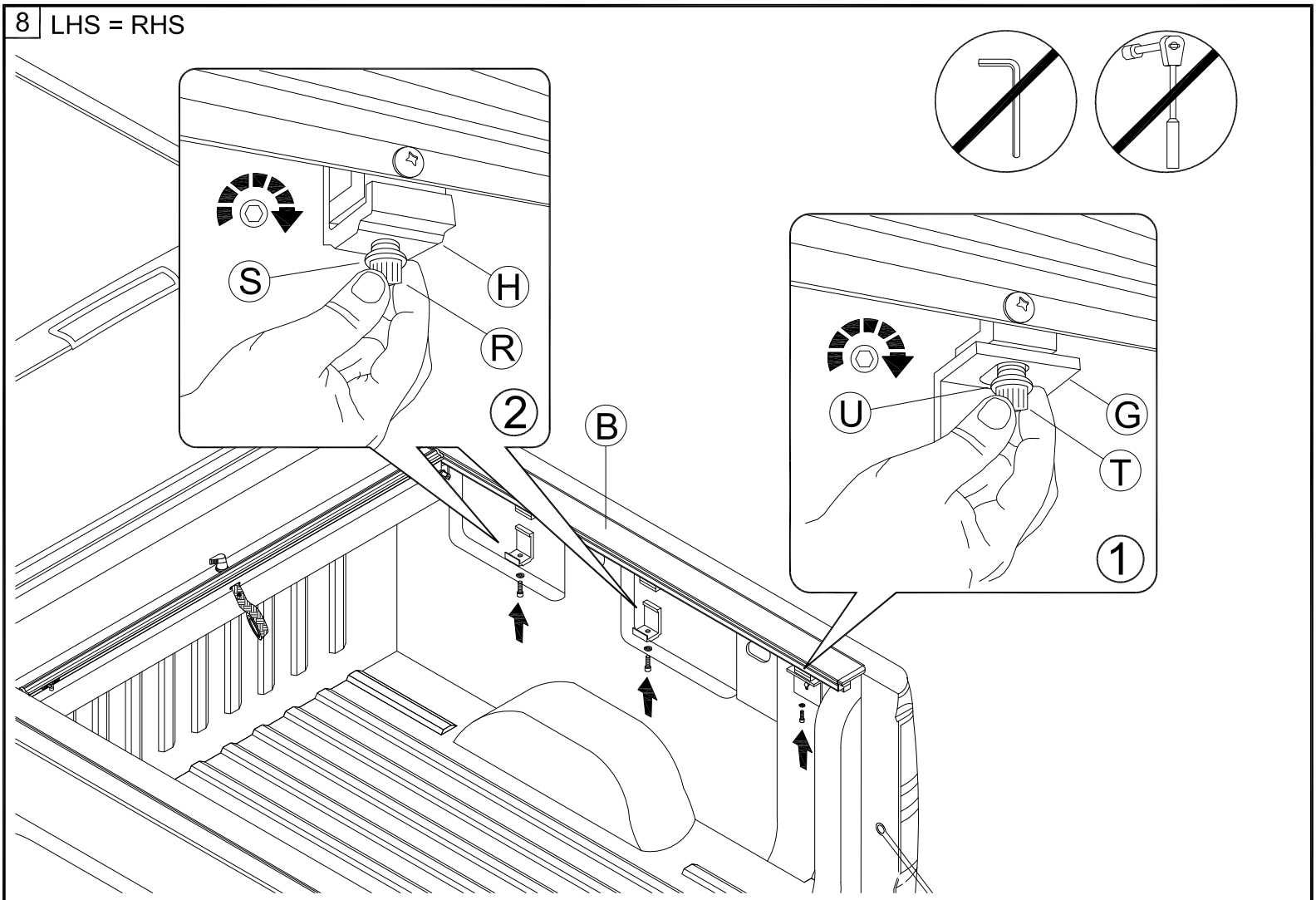

9a

If no plastic bedliner present proceed to Step 9

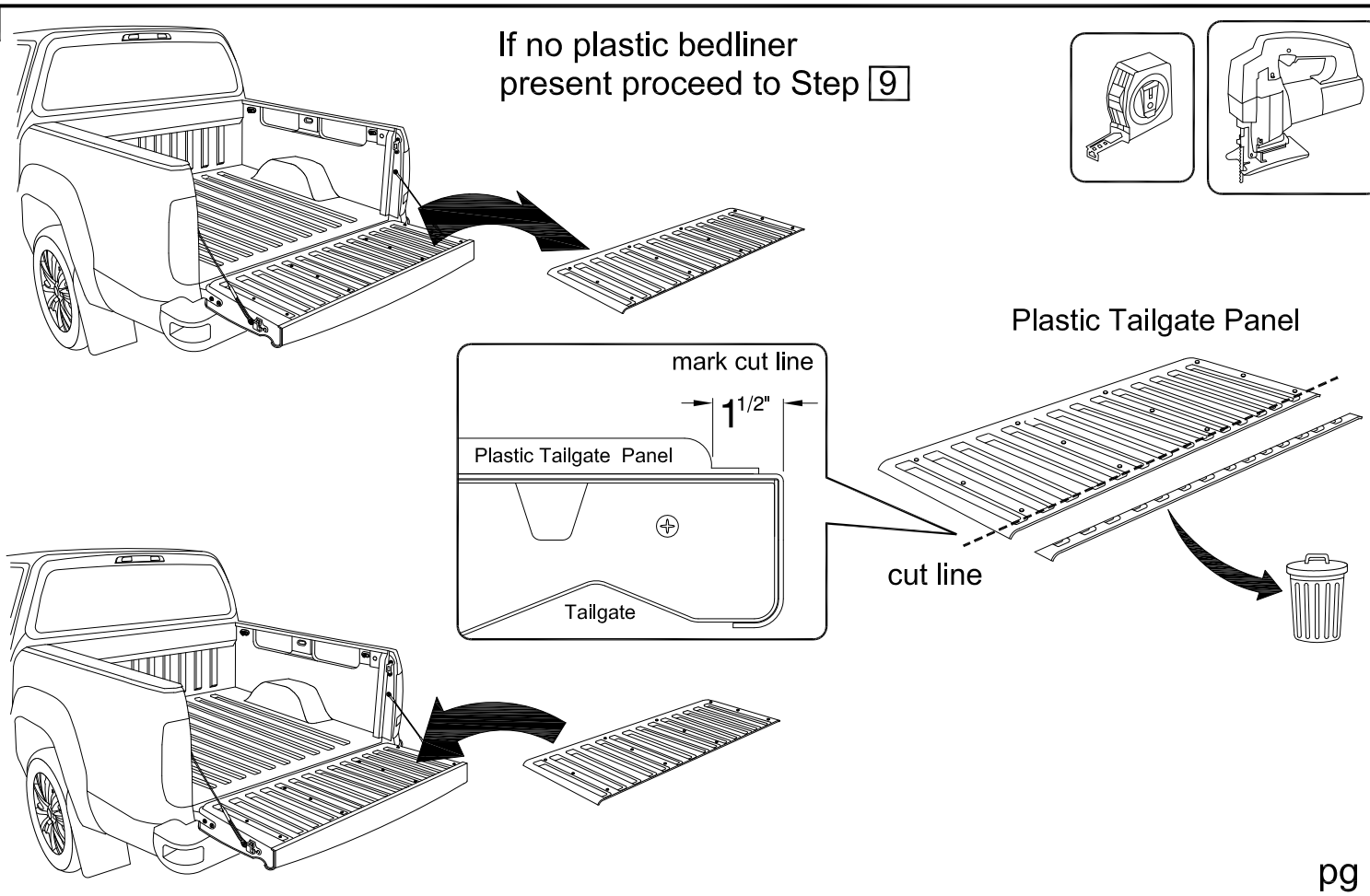

9

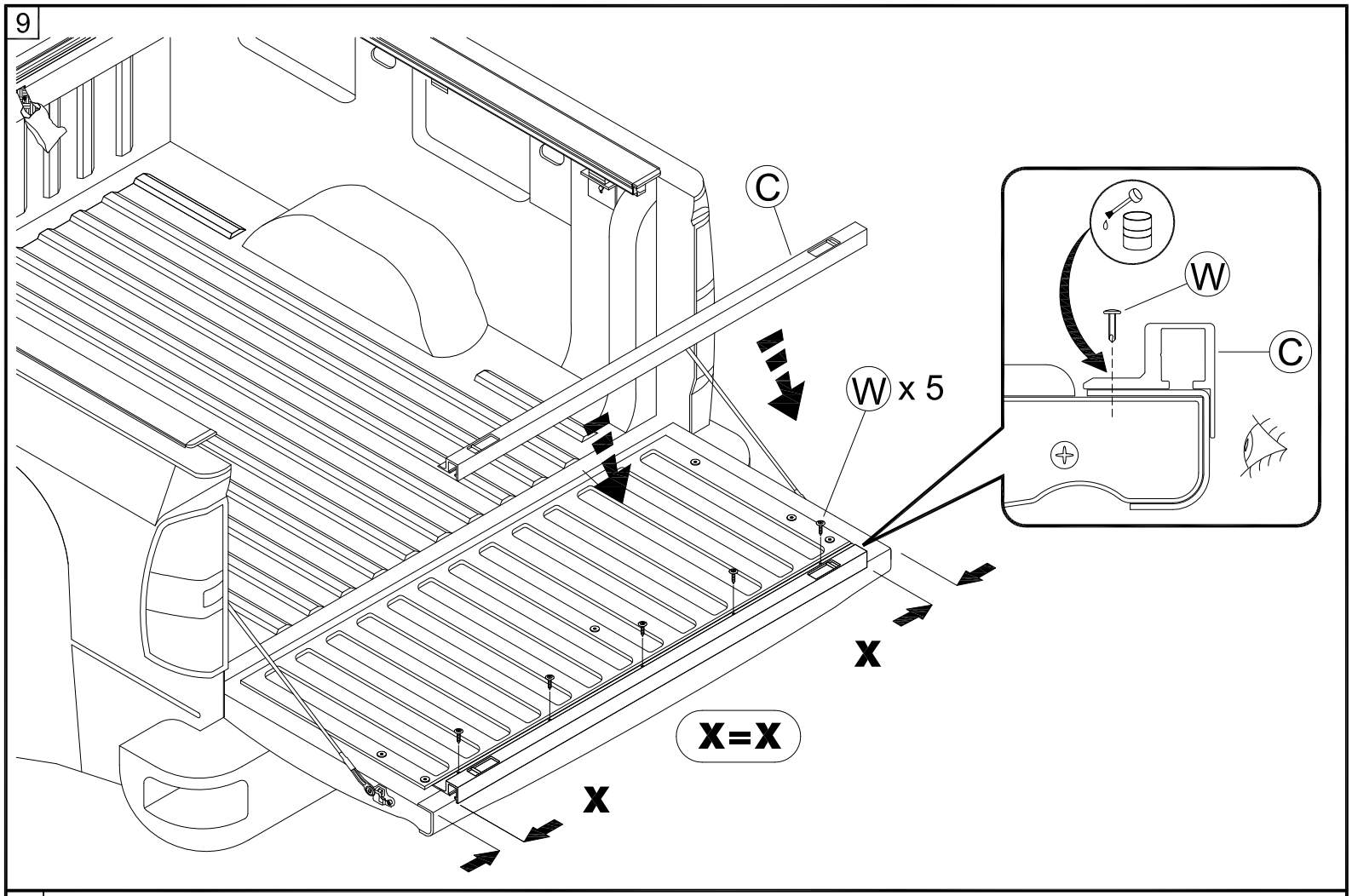

10 LHS = RHS

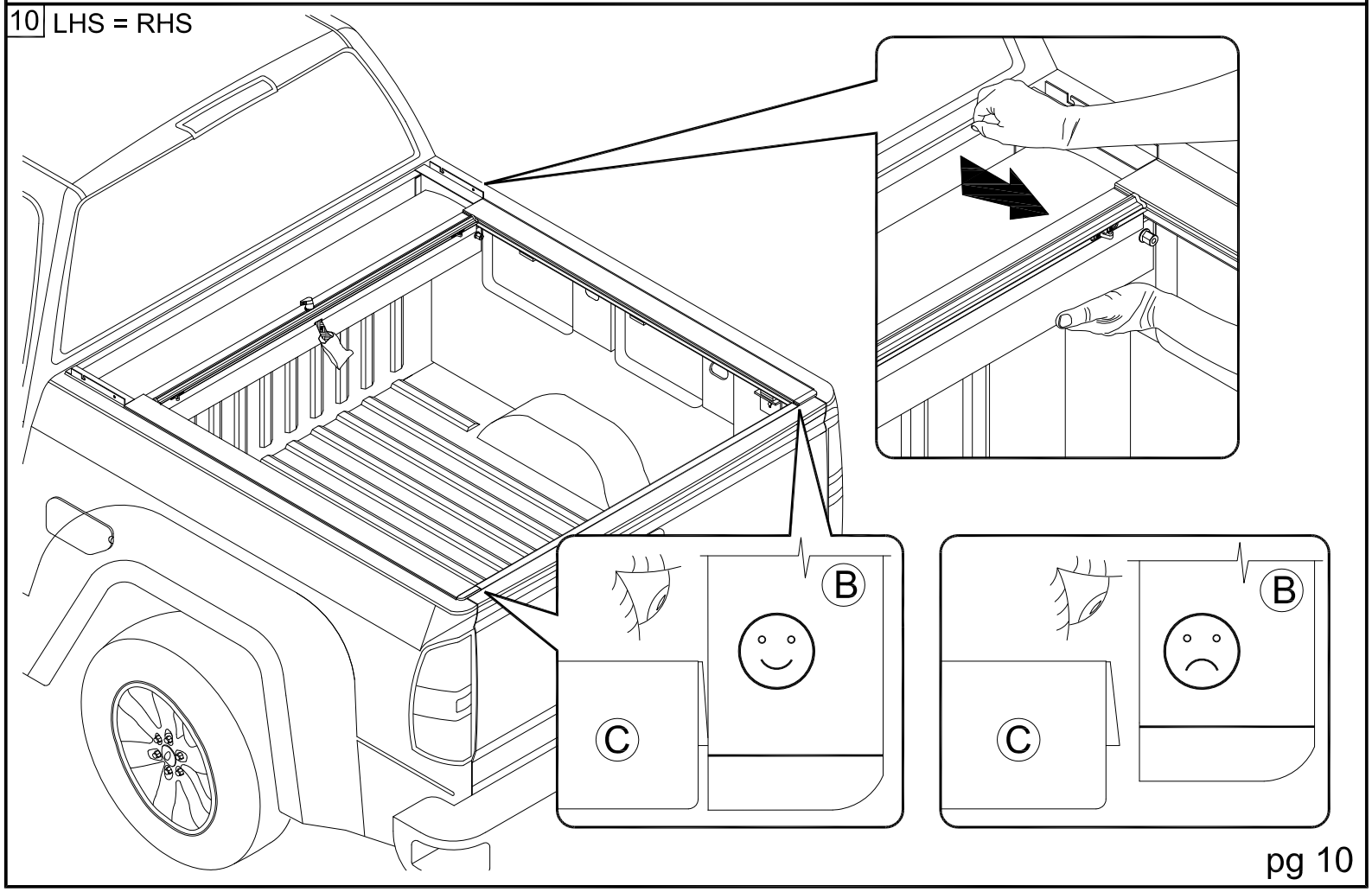

11 LHS = RHS

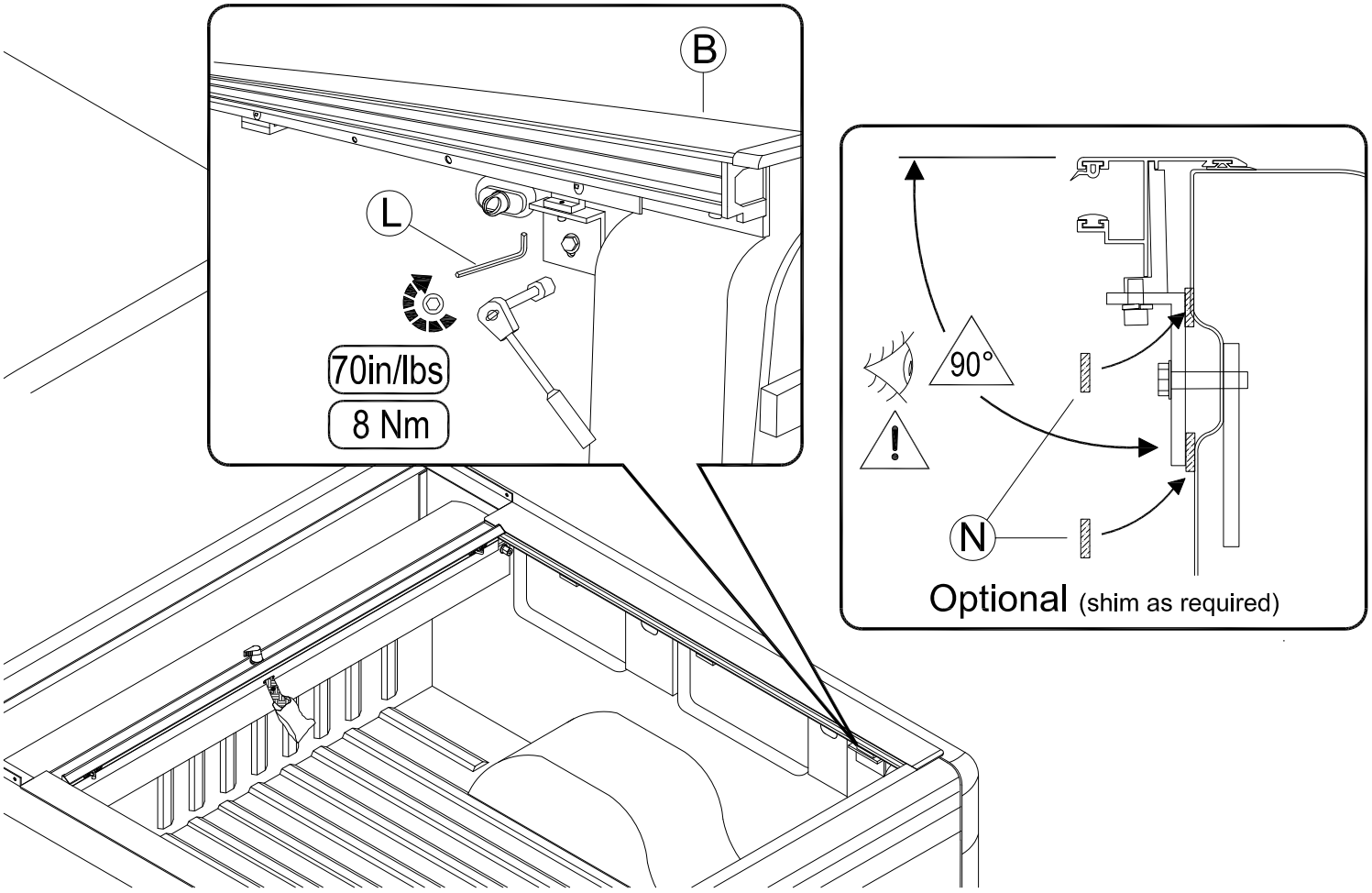

12 LHS = RHS

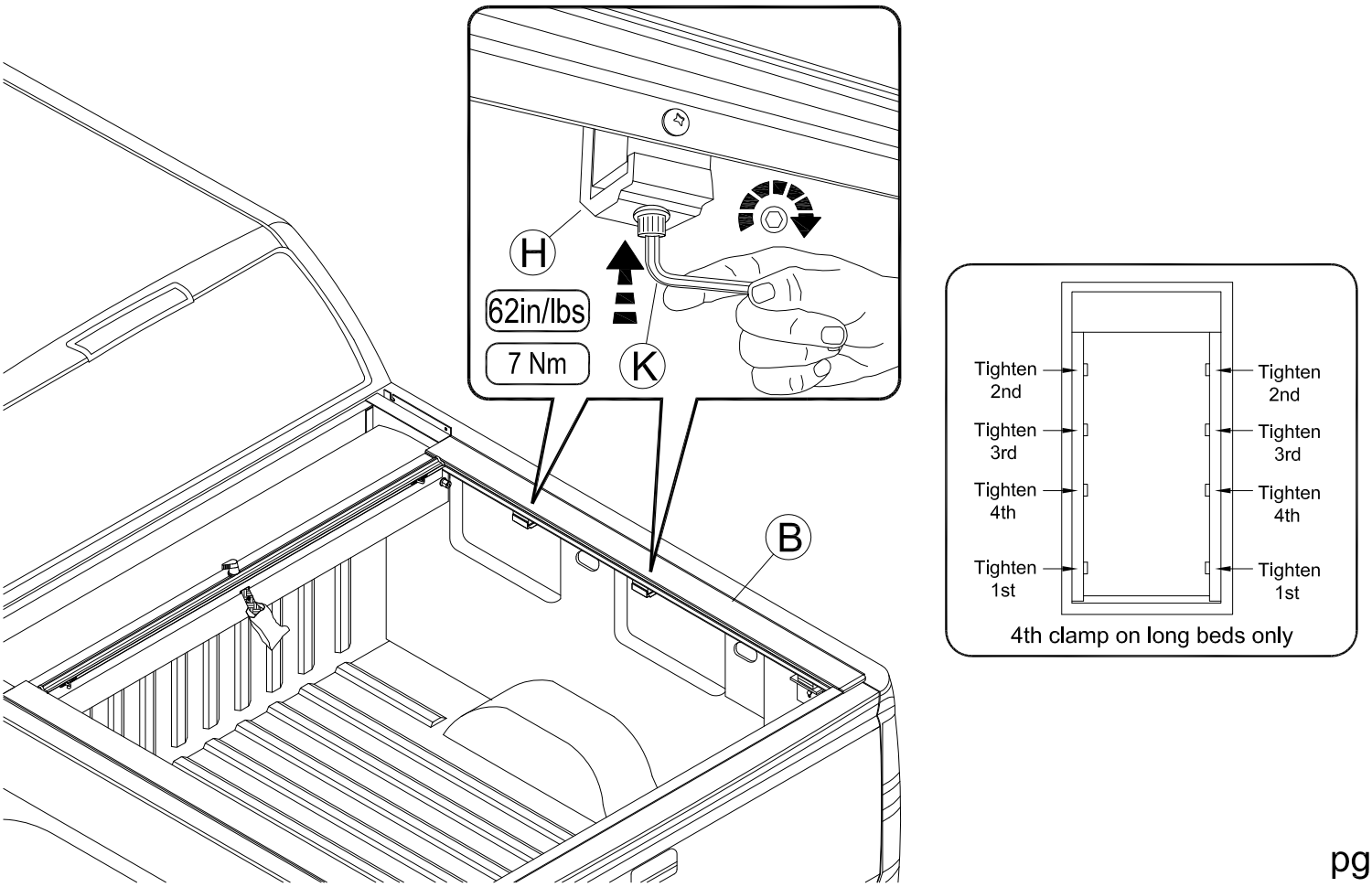

13

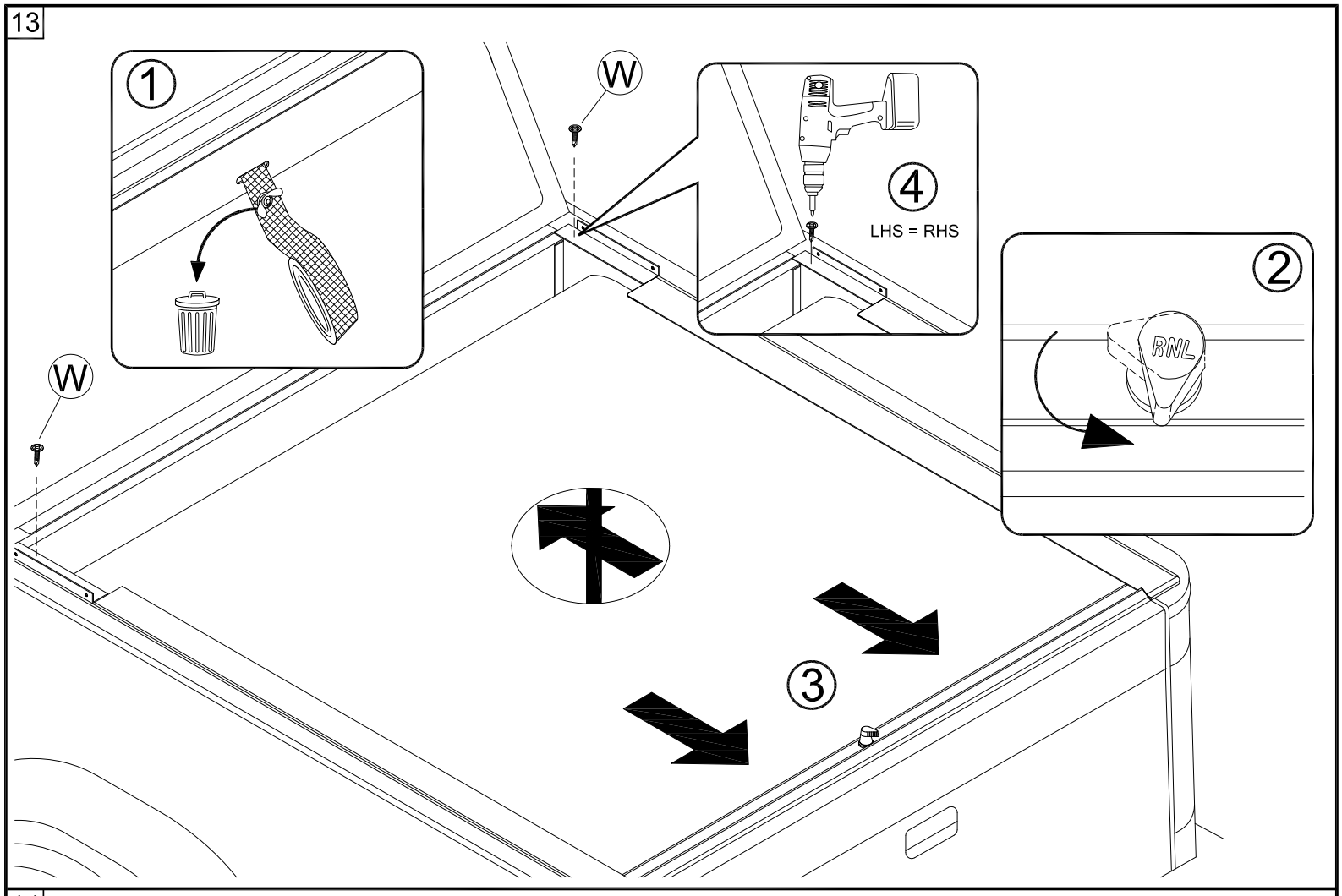

14 LHS = RHS

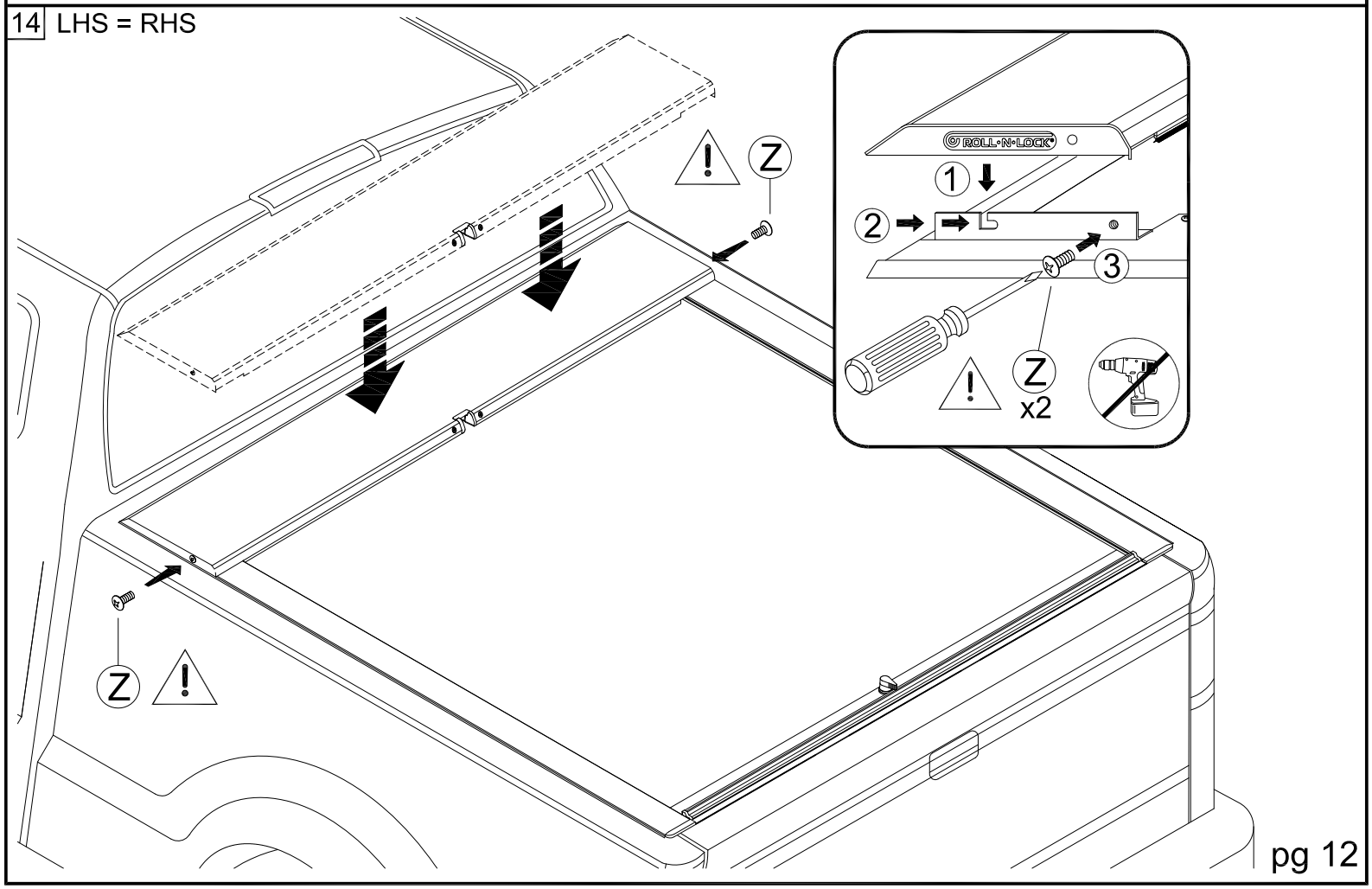

15

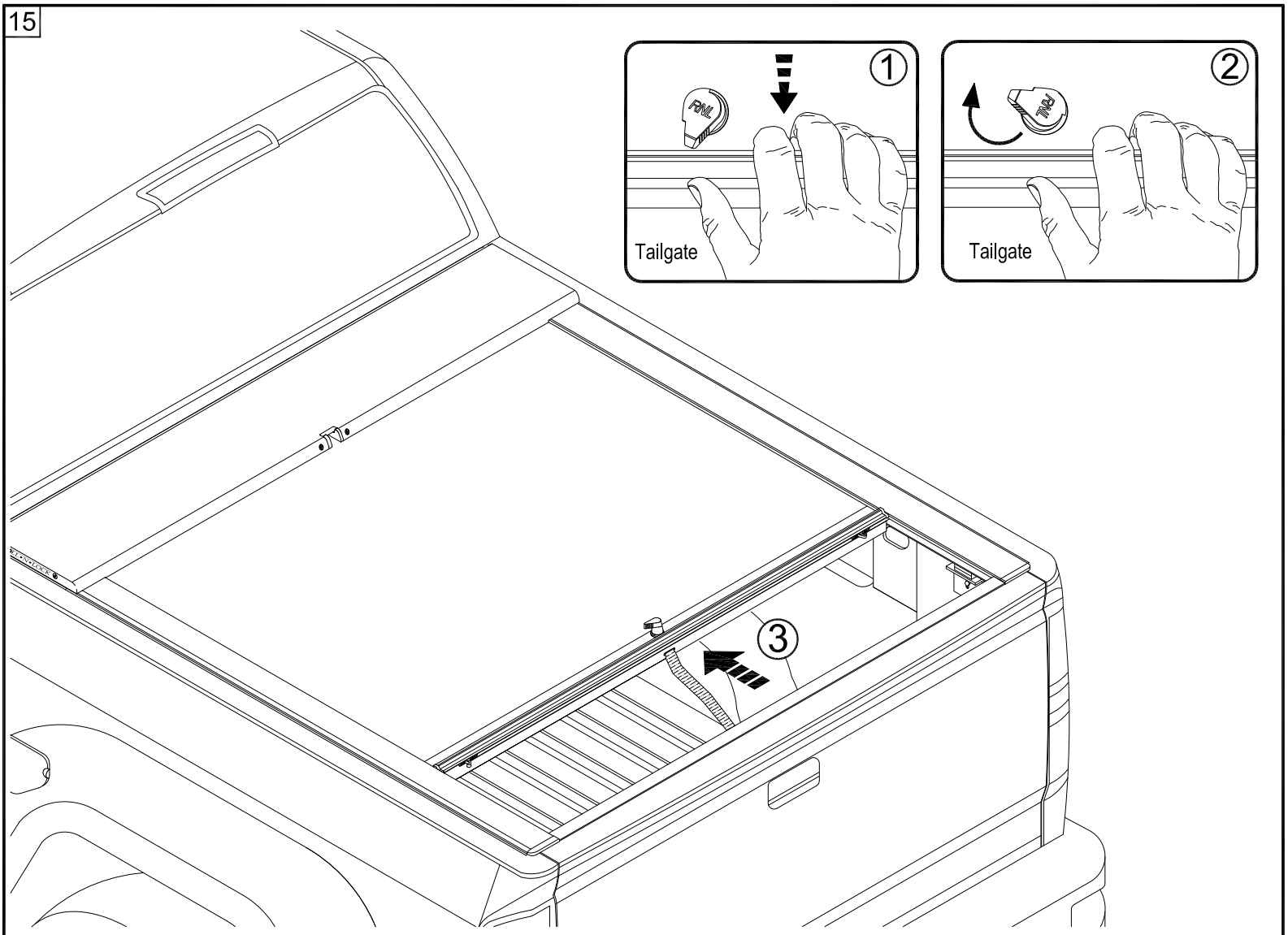

16 LHS = RHS

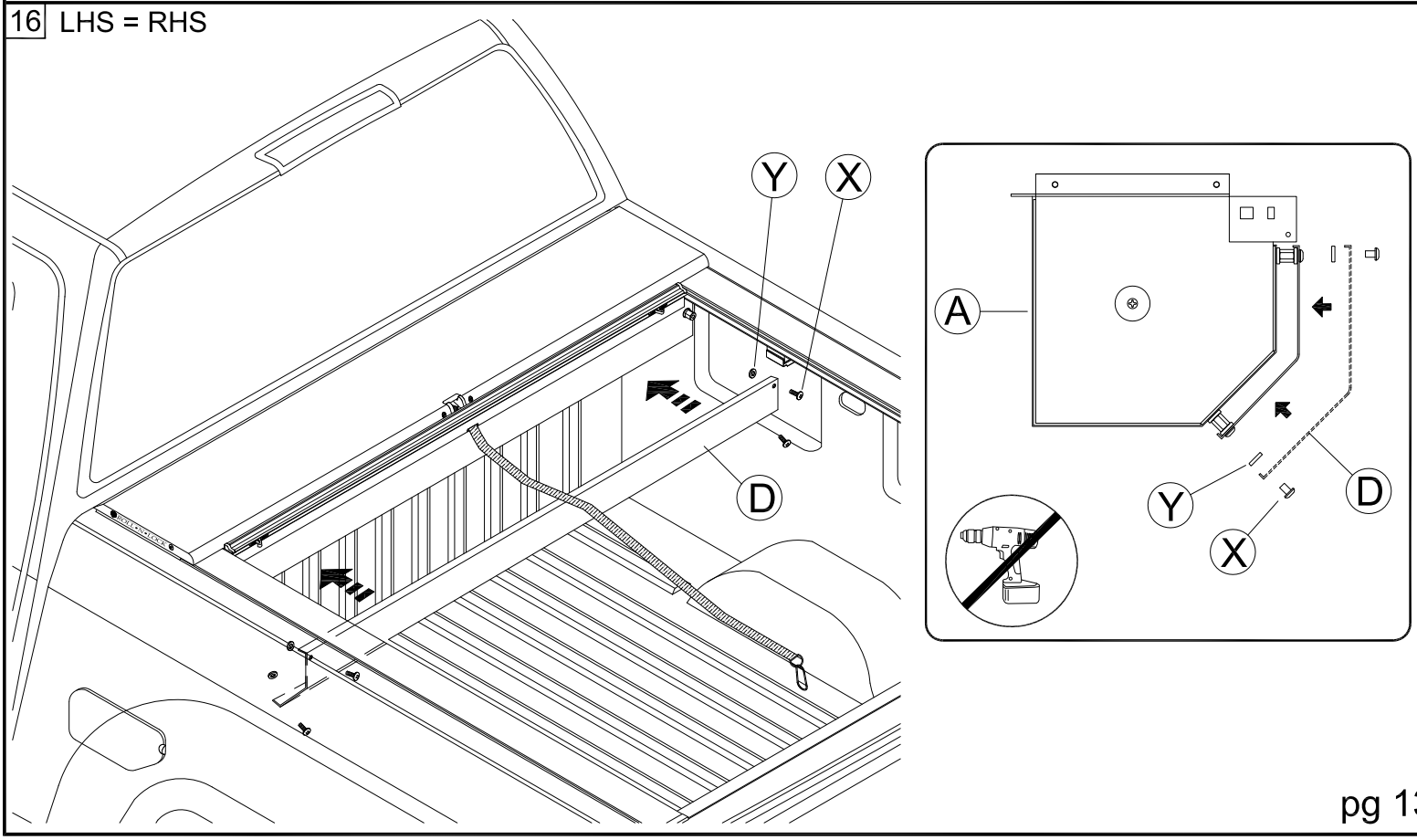

17 LHS = RHS

anti-corrosion

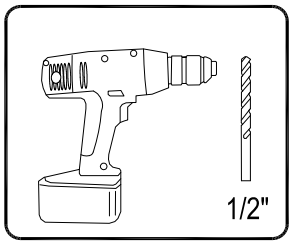
1/2"

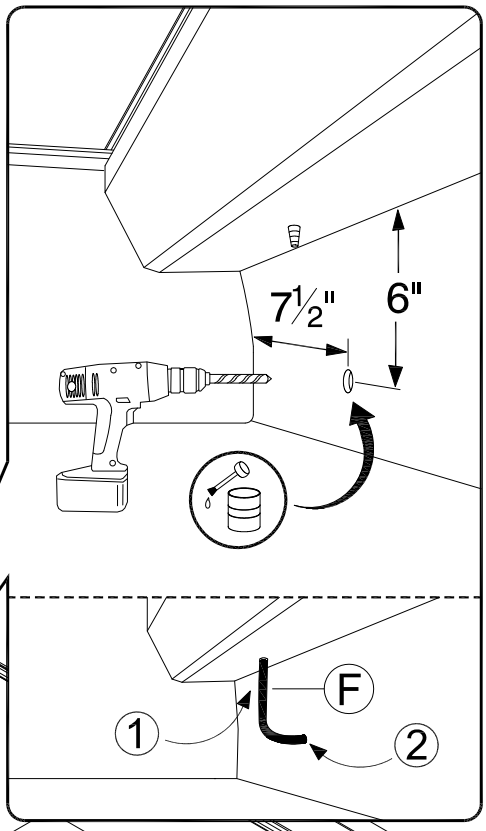
7½"
6"
F
1
2

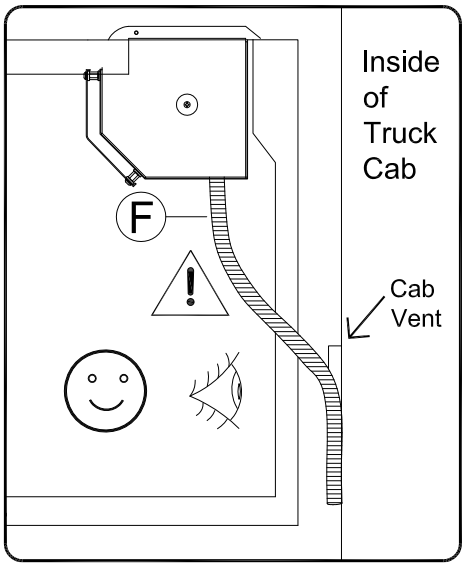
Inside of Truck Cab
F
Cab Vent

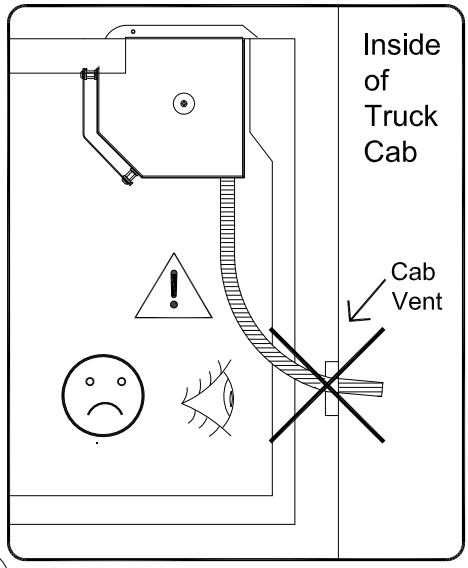
Inside of Truck Cab
Cab Vent

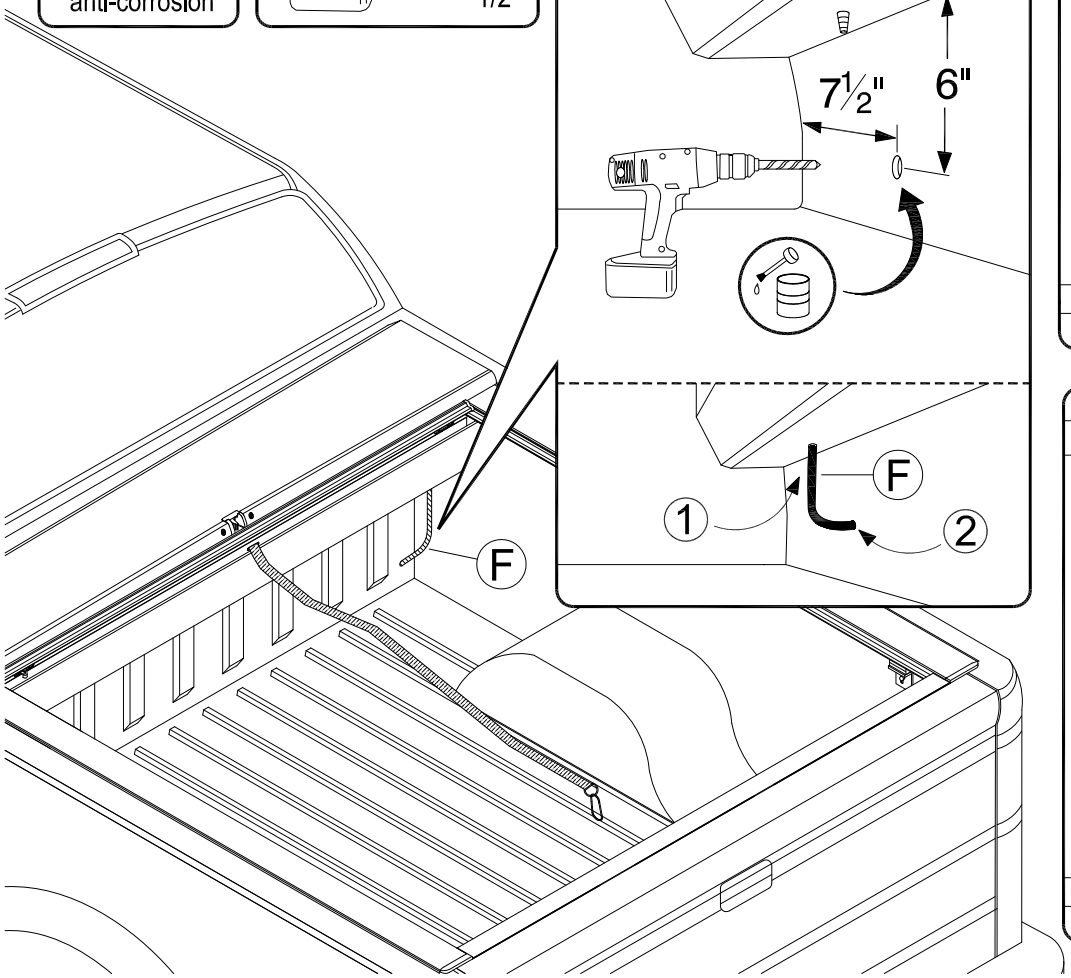
F

18

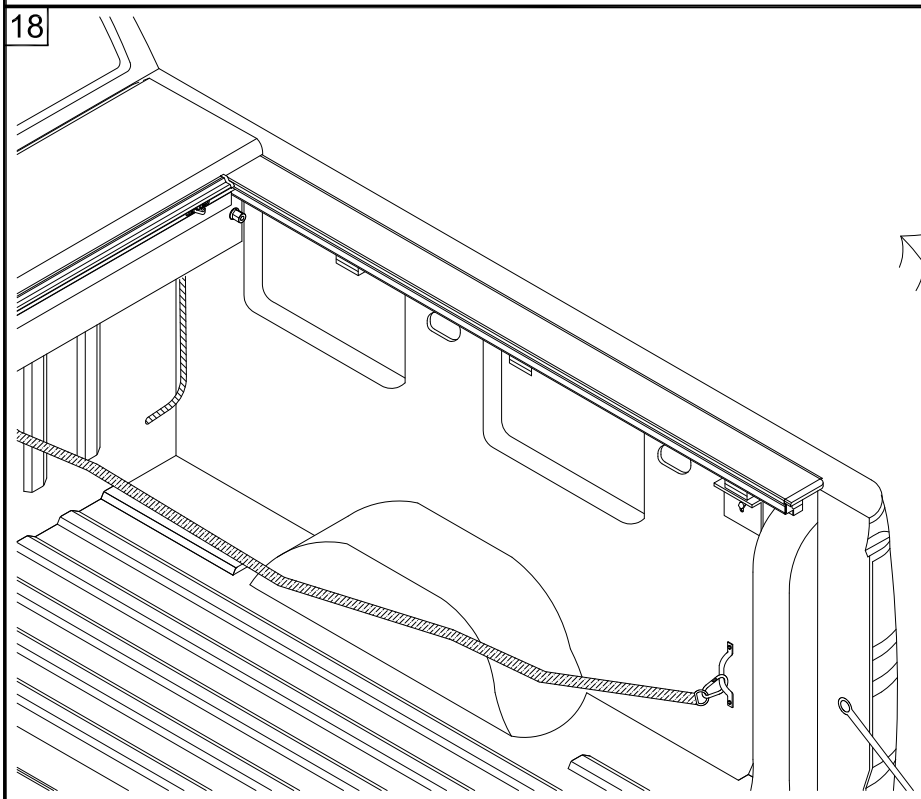

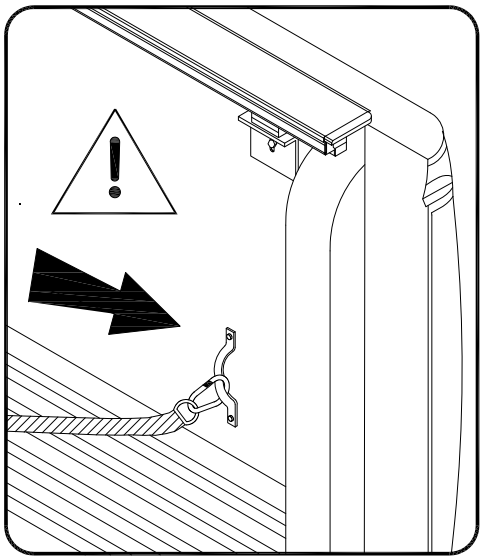

⚠ Optional Tailgate Extrusion ⚠

Product Code: 220 - 221 - 222

If you choose to install the optional Tailgate Extrusion (C), please disregard these instructions and continue with the standard installation guide. If you **DO NOT** wish to install the Tailgate Extrusion please complete the steps below and resume the standard installation guide at Step 11.

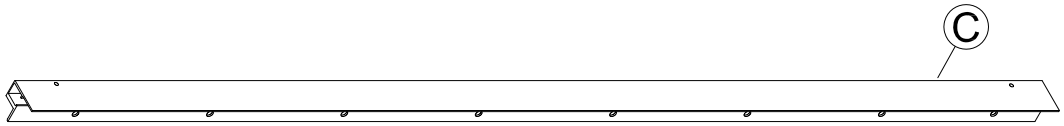

6a LHS = RHS

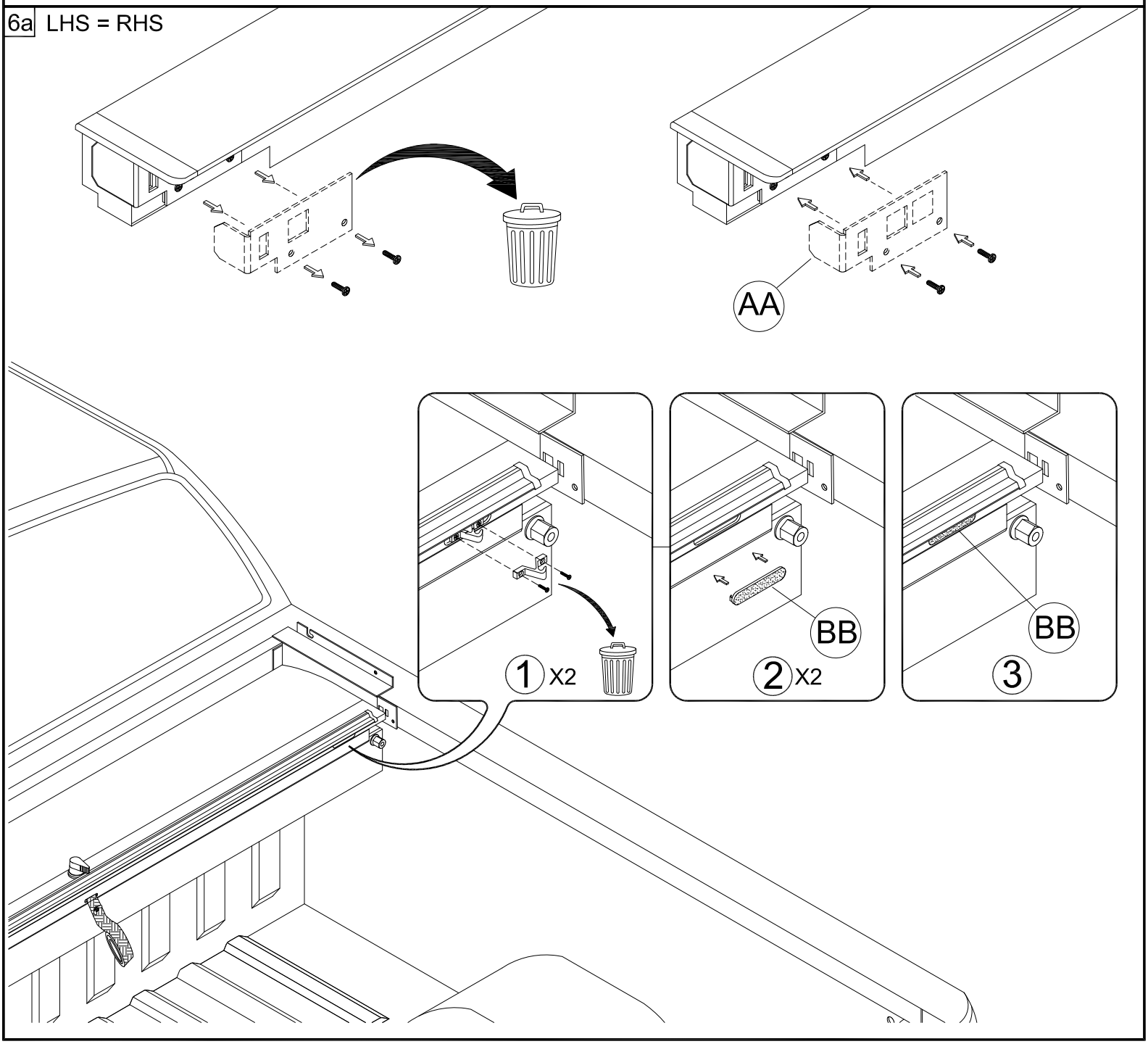

7a LHS = RHS

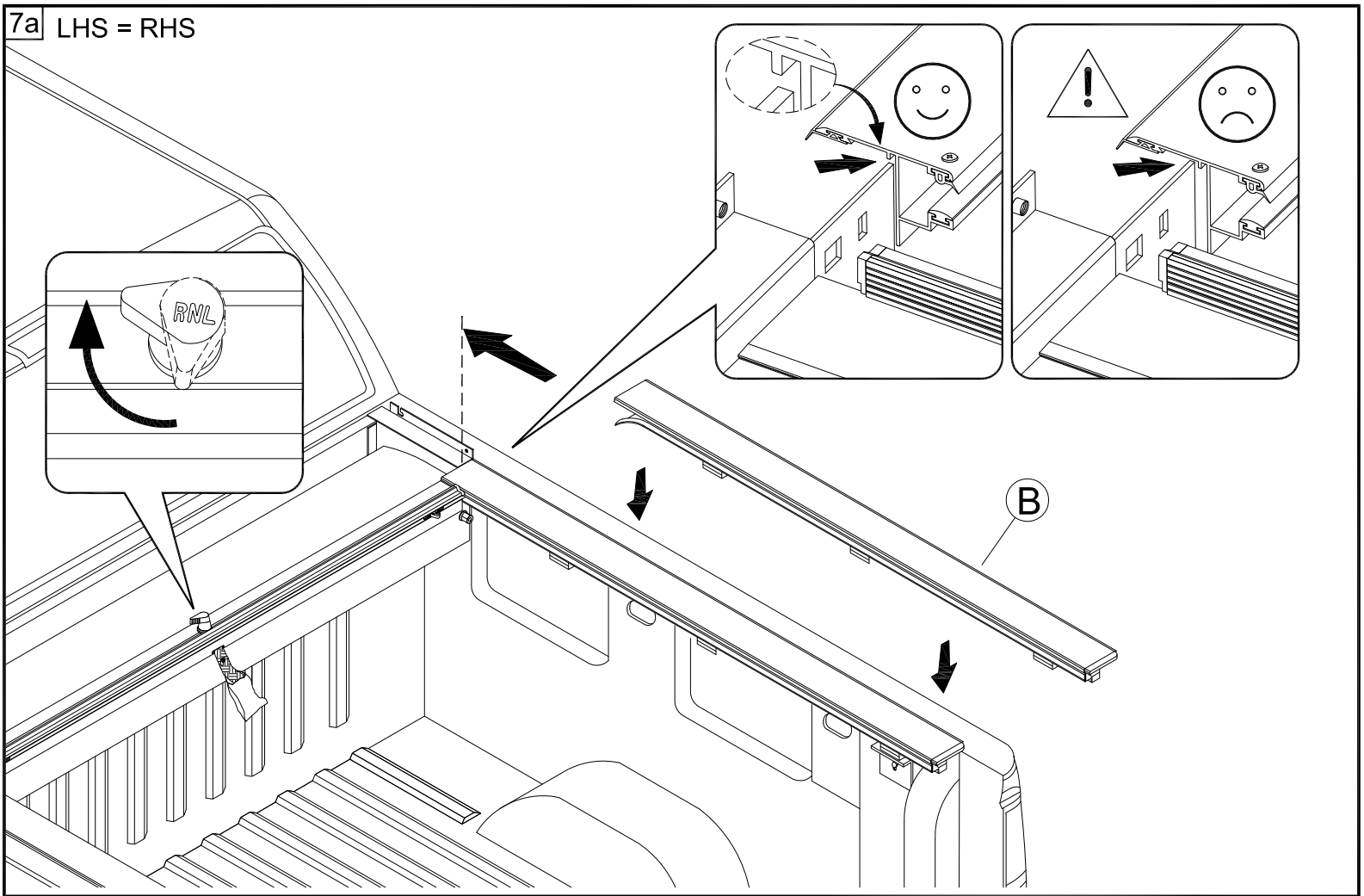

8a LHS = RHS

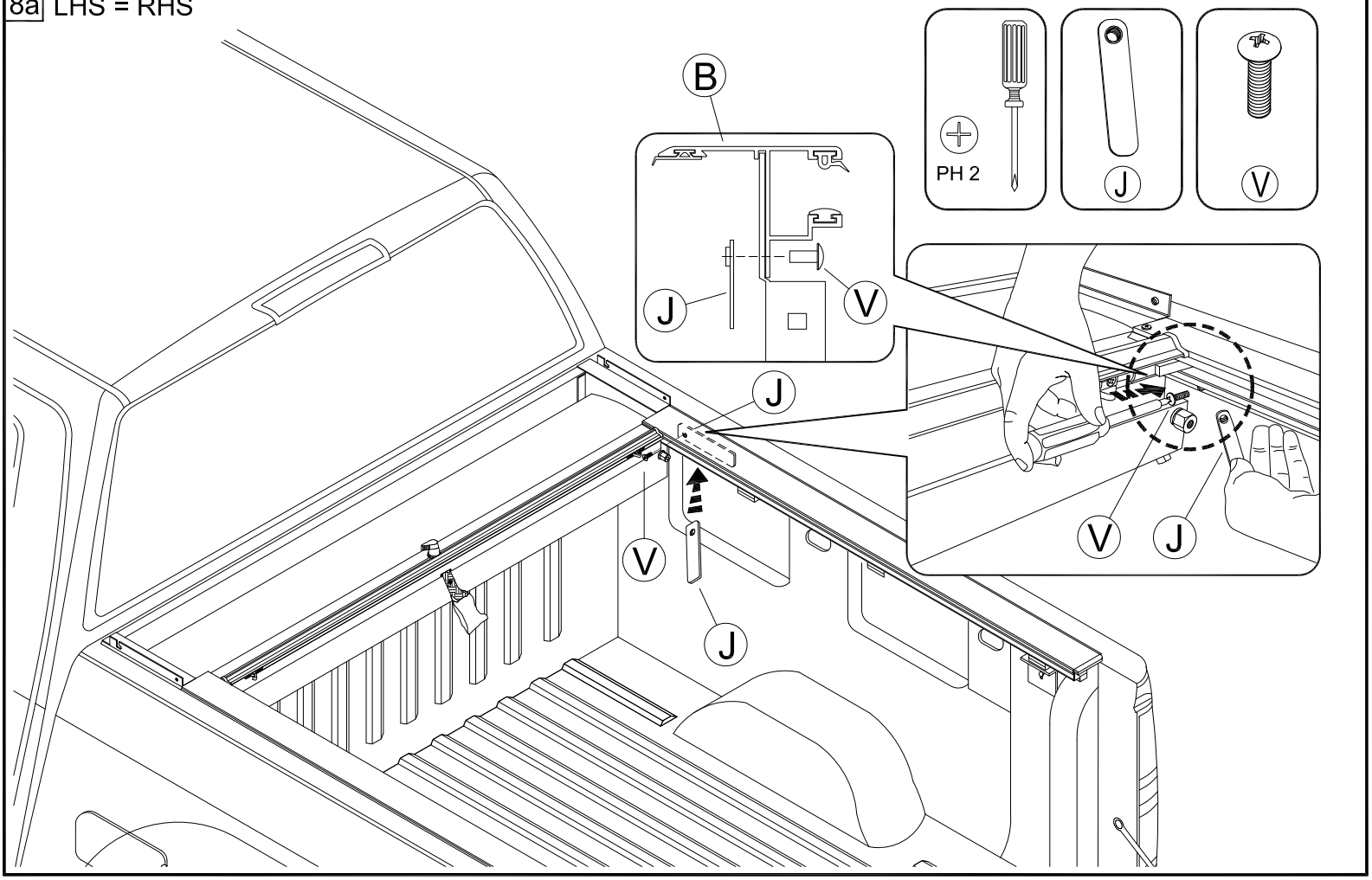

9a LHS = RHS

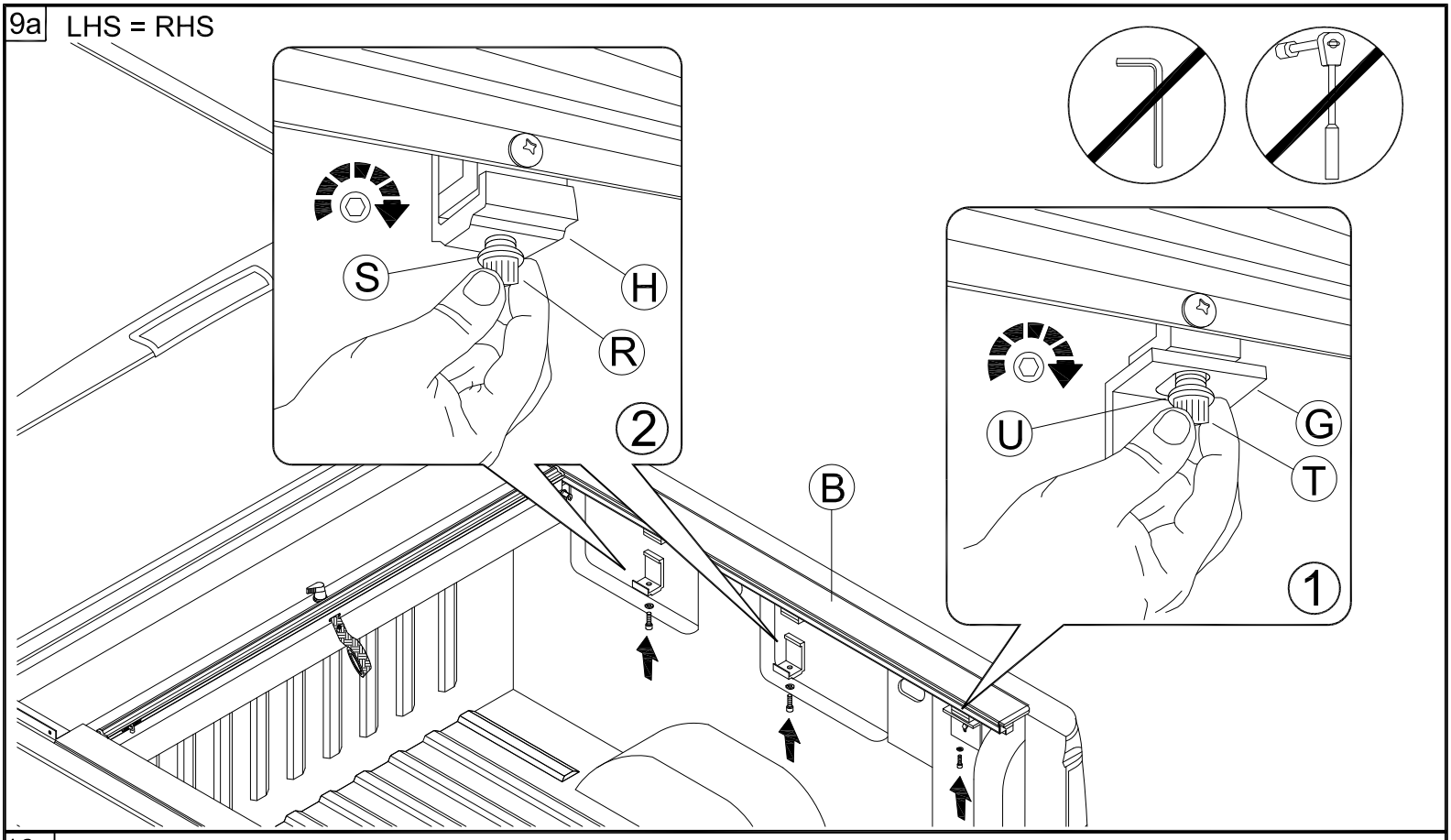

10a

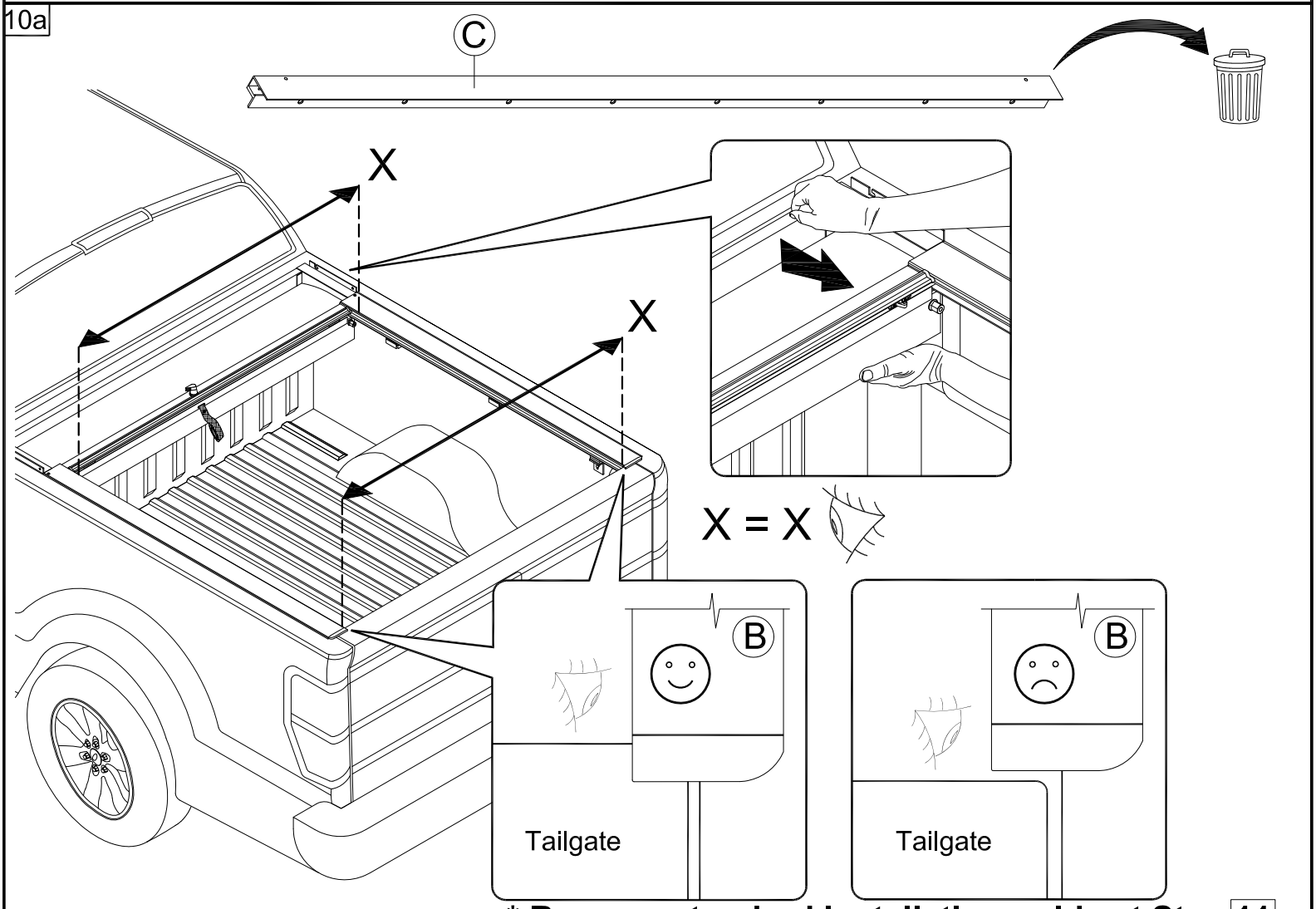

*** Resume standard installation guide at Step 11.**