INSTRUCTION SHEET

50A Racing Alternator Bracket
for Quick Change Rearend 400, 8-400, 8-4008

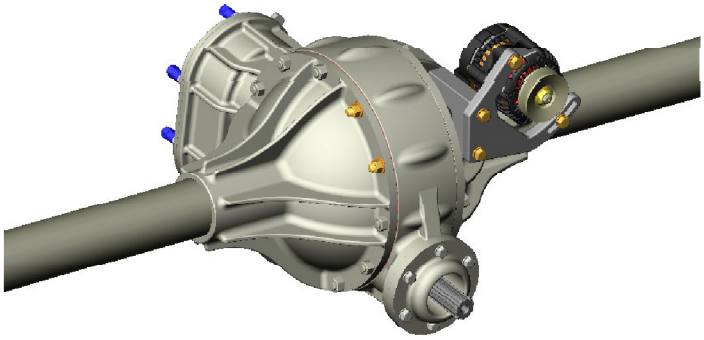

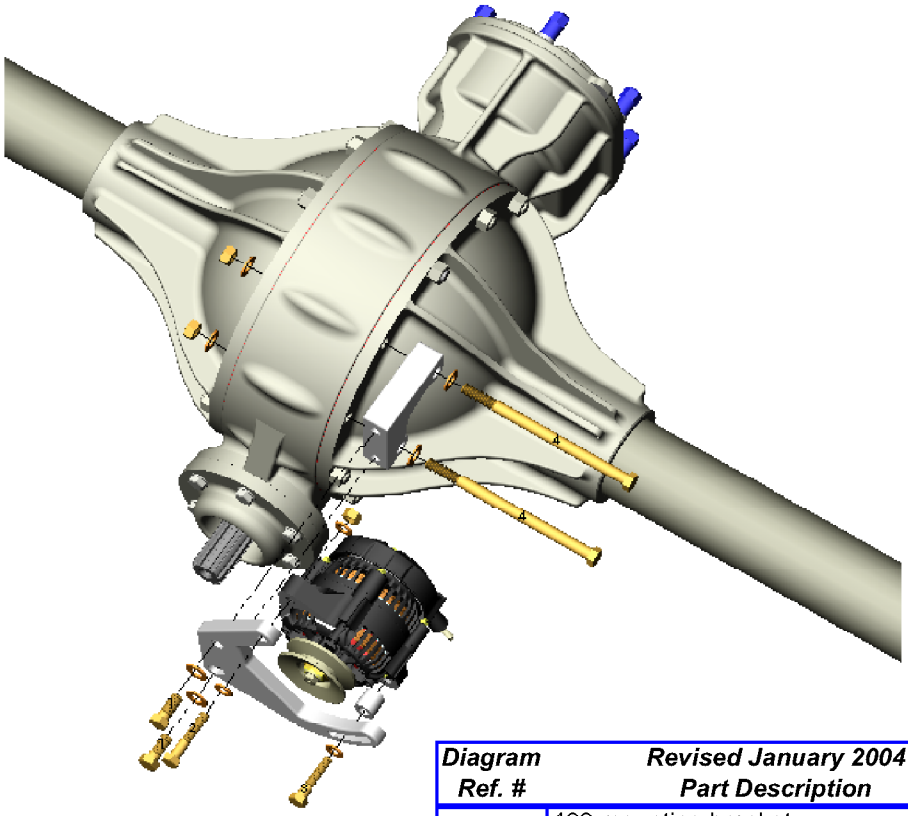

Assembly per illustration.

See reverse side for special notes and instructions

Diagram Ref. #	Revised January 2004 Part Description	P/N 400 Qty.	P/N 8-400 Qty.	P/N 8-4008 Qty.
	400 mounting bracket	1	1	1
	400 slotted bracket	1	1	1
1	7/16"-14 X 1" bolt	2	2	2
2	3/8"-16 X 2" bolt	1	1	1
3	3/8"-16 X 1 3/4" bolt	1	1	1
4	7/16"-14 X 6 1/2" bolt	2	2	2
	7/16" flat washer	6	6	6
	3/8" flat washer	3	3	3
	7/16"-14 nut	2	2	2
	3/8"-16 nut	1	1	1
	3/8" ID X 3/4" OD X .75" spacer	1	1	1
	2.8" V-belt alternator pulley		1	1
	8162 one wire racing alternator		1	
	8168 XSvolt one wire racing alternator			1

INSTRUCTION SHEET
50A Racing Alternator Bracket for Quick Change Rear Ends
400,8-400, 8-4008

Special Notes:

*A customer supplied yoke pulley is required for use with this system (Sweet part #501-30027).

*This bracket can be assembled on either the driver or passenger side of the center section.

*Belt alignment can be adjusted by adding shims between the mounting bracket and the slotted bracket.

* ***One wire*** alternators require only the charge wire connection to function. An adequate charge wire should be run between the alternator and the positive battery post or the positive battery side of the safety cut off switch. If the alternator's charge wire is connected to the starter's battery connection or on any other positive point on the car that is on the switched side of the cutoff, the car may continue to run after the cutoff switch is opened.

* Be certain that any paint or corrosion is removed from the points where the bracket attaches to the rear end. Also be certain that an adequate ground path is supplied from the rear end to the negative battery post.

* Tension the belt to have ½" of deflection.

* If you are installing an 8-400**8** Pro Series kit refer to the **XSvolt** alternator instruction sheets for special instructions.