DRY EFI PRO FOGGER PROFESSIONAL KITS

Kit Numbers:
04471NOS w/ Super A Nozzle – Dual Stage
04472NOS w/ Annular Nozzle – Dual Stage
(Kits do not contain Bottle, Brackets, or Feed Line)

OWNER'S MANUAL

P/N 199R10592

NOTICE: Installation of Nitrous Oxide Systems Inc. products signifies that you have read this document and have agreed to the terms stated within.

It is the purchaser's responsibility to follow all installation instruction guidelines and safety procedures supplied with the product as it is received by the purchaser to determine the compatibility of the product with the vehicle or the device the purchaser intends to install the product on.

Nitrous Oxide Systems Inc. assumes no responsibility for damages occurring from accident, misuse, abuse, improper installation, improper operation, lack of reasonable care, or all previously stated reasons resulting from incompatibility with other manufacturers' products.

Nitrous Oxide Systems Inc. assumes no responsibility or liability for damages incurred by the use of products manufactured or sold by Nitrous Oxide Systems Inc. on vehicles used for competition or racing.

Nitrous Oxide Systems Inc. neither recommends nor condones the use of products manufactured or sold by Nitrous Oxide Systems Inc. on vehicles, which may be driven on public roads or highways, and assumes no responsibility for damages incurred by such use.

NOS nitrous oxide is legal for use in most states when used in accordance with state and local traffic laws. NOS does not recommend or condone the use of its products in illegal racing activities.

NOS has not pursued California Air Research Board (CARB) exemptions for these kits, hence, they are not legal for use on pollution-controlled vehicles in California. A correctly installed NOS nitrous system should not alter the emission control performance of your vehicle under standard EPA test cycle conditions.

NOTICE: The NOS Pro Fogger systems are not intended for use on hatchback type vehicles without the use of a NOS External Aluminum Blow-Down Tube and Racer Safety Pressure Relief Cap. See website or current catalog for correct part numbers.

HAZARDS DEFINED

This manual presents step-by-step instructions that describe the process of installing your Nitrous Oxide Injection System. These procedures provide a framework for installation and operation of this kit. Parts are referenced by name and number to avoid confusion. Within the instructions, you are advised of potential hazards, pitfalls, and problems to avoid. The following examples explain the various hazard levels:

WARNING! Failure to comply with instructions may result in injury or death.

CAUTION! Failure to comply with instructions may result in damage to equipment.

NOTE: This information is important, needs to be emphasized, and is set apart from the rest of the text.

HINT: These special instructions provide a handy work tip.

NITROUS OXIDE INJECTION SYSTEM SAFETY TIPS

WARNINGS

Do not attempt to start the engine if the nitrous has been injected while the engine was not running. Disconnect the coil wire and turn the engine over with the throttle wide open for several revolutions before attempting to start. Failure to do so can result in extreme engine damage.

Never permit oil, grease, or any other readily combustible substances to come in contact with cylinders, valves, solenoids, hoses, and fittings. Oil and certain gases (such as oxygen and nitrous oxide) may combine to produce a highly flammable condition.

Never interchange nitrous and fuel solenoids. Failure to follow these simple instructions can result in extreme engine damage and/or personal injury.

Never drop or violently strike the bottle. Doing so may result in an explosive bottle failure.

Never change pressure settings of safety relief valve on the nitrous bottle valve. Increasing the safety relief valve pressure settings may create an explosive bottle hazard.

Identify the gas content by the NOS label on the bottle before using. If the bottle is not identified to show the gas contained, return the bottle to the supplier.

Do not deface or remove any markings, which are on the nitrous bottle.

Nitrous bottle valves should always be closed when the system is not being used.

Notify the supplier of any condition, which might have permitted any foreign matter to enter the valve or bottle.

Keep the valves closed on all empty bottles to prevent accidental contamination.

After storage, open the nitrous bottle valve for an instant to clear the opening of any possible dust or dirt.

It is important that all threads on the valves and solenoids are properly mated. Never force connections that do not fit properly.

CONGRATULATIONS on purchasing your NOS Nitrous Oxide Injection System. Your system is composed of the highest quality components available. It should provide many miles of trouble-free performance when used correctly. If you have any questions regarding the performance of your system, call NOS Technical Service.

TABLE OF CONTENTS:

WHAT IS NITROUS OXIDE? 3
Do's and Don'ts of Nitrous Oxide 3
Chapter 1 Introduction to your NOS Nitrous Oxide Kit 4
1.1 General Information 4
1.2 Dry EFI Pro Fogger System Requirements 4
1.3 Kit Components 5
Chapter 2 Kit Installation (Typical Dry Fogger Kit) 6
2.1 Fogger Nozzle Installation 6
2.2 Fogger Nozzle Feed Tube Mounting 7
2.2.1 Nitrous Feed Tube Installation 7
2.3 Solenoid Mounting 9
2.3.1 Nitrous Solenoid Installation 9
2.4 Nitrous Solenoid Feed Line Installation 10
2.5 Main Nitrous Feed Line Mounting 10
2.6 Electrical System 10
Chapter 3 Advanced Tuning for Maximum Power 12
3.1.A Determining Optimum Nitrous/Fuel Ratio 12
3.1.B Determining Optimum Ignition Timing 13
Chapter 4 Routine Maintenance 15
4.1 Nitrous Solenoid Filter 15
4.2 Nitrous Solenoid Plunger 15
4.2.A General Information 15
4.2.B Nitrous Solenoid Plunger Disassembly and Inspection 15
Appendix A Troubleshooting Guide 17

WHAT IS NITROUS OXIDE?

NITROUS OXIDE…

…Is a cryogenic gas composed of nitrogen and oxygen molecules
…Is 36% oxygen by weight
…Is non-flammable by itself
…Is stored as a compressed liquid
…Exists in two grades—U.S.P. and Nitrous Plus:

- ❑ U.S.P. is medical grade nitrous oxide; its common use is dental and veterinary anesthesia. It is also commonly used as a propellant in canned whipped cream. U.S.P. is not available to the public.
- ❑ Nitrous Plus differs from U.S.P. in that it contains trace amounts of sulphur dioxide added to prevent substance abuse. Nitrous Plus is intended for automotive applications and is available for sale to the public

In automotive applications, Nitrous Plus and fuel are injected into the engine's intake manifold, which produces the following results:

- ❑ Lowers engine intake air temperature, producing a dense inlet charge.
- ❑ Increases the oxygen content of the inlet charge (air is only 22 percent oxygen by weight).
- ❑ Increases the rate at which combustion occurs in the engine's cylinders.

Do's and Don'ts of Nitrous Oxide

Do's

- ❑ Read all instructions before attempting to install your NOS nitrous system.
- ❑ Make sure your fuel delivery system is adequate for the nitrous jetting you have chosen. Inadequate fuel pressure or flow ***will*** result in engine damage.
- ❑ Use 14 gauge (minimum) wire when installing electrical system components.
- ❑ Use high-quality connections at all electrical joints.
- ❑ Use PTFE-based **paste** on pipe style fittings.
- ❑ Make sure your engine and related components (ignition, carburetor, and driveline) are in proper working condition.
- ❑ **If nitrous is accidentally injected into the engine when it is not running, remove the engine coil wire, open the throttle, and crank the engine 10 to 15 seconds before starting. Failure to do so can result in an explosive engine failure.**
- ❑ **Use your NOS nitrous system only at wide-open throttle and at engine speeds above 3000 RPM.**
- ❑ **Install a proper engine to chassis ground. Failure to do so may result in explosive failure of the main nitrous supply line.**
- ❑ Use a high-quality fuel, as suggested in Chapter 3, Baseline Tuning Suggestions.

Don'ts

- ❑ Engage your nitrous system with the engine off. ***Severe*** engine damage can occur.
- ❑ Modify NOS nitrous systems (if you need a non-stock item, call NOS Technical Service for assistance).
- ❑ Overtighten AN type fittings.
- ❑ Use PTFE Tape on pipe threads. Pieces of PTFE tape can break loose and become lodged in nitrous or fuel solenoids or solenoid filters. Debris lodged in a nitrous or fuel solenoid can cause catastrophic engine failure.

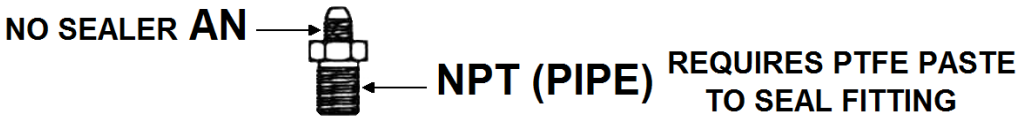

- ❑ Use sealant of any kind on AN type fittings.
- ❑ Allow nitrous pressure to exceed 1100 psi. Excessive pressure can cause swelling or in extreme cases failure of the nitrous solenoid plunger. Solenoid plungers are designed so that pressure-induced failures will prevent the valve from operating. No leakage should occur with this type of failure.
- ❑ **Inhale nitrous oxide. Death due to suffocation can occur.**
- ❑ **Allow nitrous oxide to come in contact with skin. Severe frostbite can occur.**
- ❑ Use octane boosters that contain methanol. Fuel solenoid failure may occur, producing severe engine damage.

Chapter 1 Introduction to your NOS Nitrous Oxide Kit

1.1 General Information

Direct port nitrous oxide injection kits are intended to provide maximum performance and tunability in a nitrous oxide injection system. The Dry EFI Pro Fogger Kits are intended for highly modified domestic V8 engines using Holley EFI.

NOTE: If you plan to run a stage progressively with a Holley HP or Dominator ECU, you need to purchase **Holley PN 554-111** Solenoid Driver (quantity of 1 for each stage).

NOTE: These are "Plumbing Kits" and do not contain any electrical components.

Horsepower increases from these kits will vary with engine displacement and configuration. However, approximate power increases can be estimated based upon the mass flow of nitrous oxide into the engine. On a typical 450+ C.I. displacement engine, the following power increases approximate what you can expect to see.

Table 1 DRY EFI PRO FOGGER Kit Configurations

Configuration	HP	Jetting	Baseline Pressures	Fuel Quality	Ignition Timing	Spark Plug Heat Range (NGK or Equiv)
		N_2O	N_2O			
Fogger Jetting	150	22	950	100+ Octane	**	-8
	175*	24	950	110+ Octane	**	-9
	250*	28	950	112+ Octane	**	-10
	300*	32	950	114+ Octane	**	-10
	350*	36	950	114+ Octane	**	-11
	400	40	950	116+ Octane	**	-11
	500	42	950	116+ Octane	**	-11

*** Jetting included in kits ** See section 3.1.B for timing recommendations**

1.2 Dry EFI Pro Fogger System Requirements

When used correctly, NOS nitrous oxide injection elevates cylinder pressures and temperatures while increasing the combustion rate. These characteristics make the engine more sensitive to detonation. **To ensure proper performance and engine life, the following is an absolute must:**

- **Adequate Fuel Pressure and Delivery**

When designing your fuel system, plan on your pumps and lines flow at least 0.10 gallons of *gasoline* per hour per horsepower at 40 psi.

- **Forged Pistons**

Cast pistons are very prone to failure at elevated cylinder temperatures and pressures.

- **Connecting Rods**

Standard forged connecting rods tend to buckle under the high compressive loads generated with large doses of nitrous oxide. For most applications, an aftermarket steel billet rod is acceptable. For extremely high output applications, aluminum connecting rods are suggested.

- **Crankshaft**

Stock cast crankshafts may break. Stock forgings can bend or twist in high output applications. Aftermarket units are recommended for very high output applications.

- **Cylinder Block**

Four bolt main cap blocks reduce the tendency for the main caps to "walk" under high output loading. Cylinder head studs decrease the chance of cylinder heads lifting or moving relative to the deck surface.

- **High Output Ignition System**

Stock ignition systems are prone to producing misfires at high-RPM conditions. A quality aftermarket racing ignition is suggested.

1.3 Kit Components

Before beginning the installation of your NOS kit, compare the components in your kit with those shown in Figure 1 and listed in Table 2. If any components are missing, please contact NOS Technical Support.

Table 2 Dry EFI Pro Fogger Parts List

Item	Description	Quantity	NOS P/N
(1)	1/16” NPT Tap	1	15990NOS
(2A)	Super A Fogger Nozzle for 04471NOS	8	13704NOS
(2B)	Annular Fogger Nozzle for 04472NOS	8	13700R-SNOS
(3)	3AN x 3/16” B-Nut (Blue)	16	17550NOS
(4)	3AN x 3/16” Sleeve (Blue)	16	17600NOS
(5)	# 24, 28, 32, & 36 SS Flare Jets	8 each	13760-xxNOS
(6)	3/16” x 12” SS tube	16	16365-SNOS
(7)	1/8” NPT Distribution Block	4	34R12809
(8)	¼-28 x 3/16” Compression Fitting	16	16442-RNOS
(9)	Pro Race N_2O Solenoid	4	18048RNOS
(10)	N_2O Filter	4	15564NOS
(11)	6AN 1ft Hose, Blue	6	15400NOS
(12)	6AN Y Fitting (Blue)	3	17835NOS
(13)	1/8” NPT Male Nipple	4	17500NOS

Figure 1 Dry Fogger Kit Components

Figure 2 Typical Fogger Exploded View

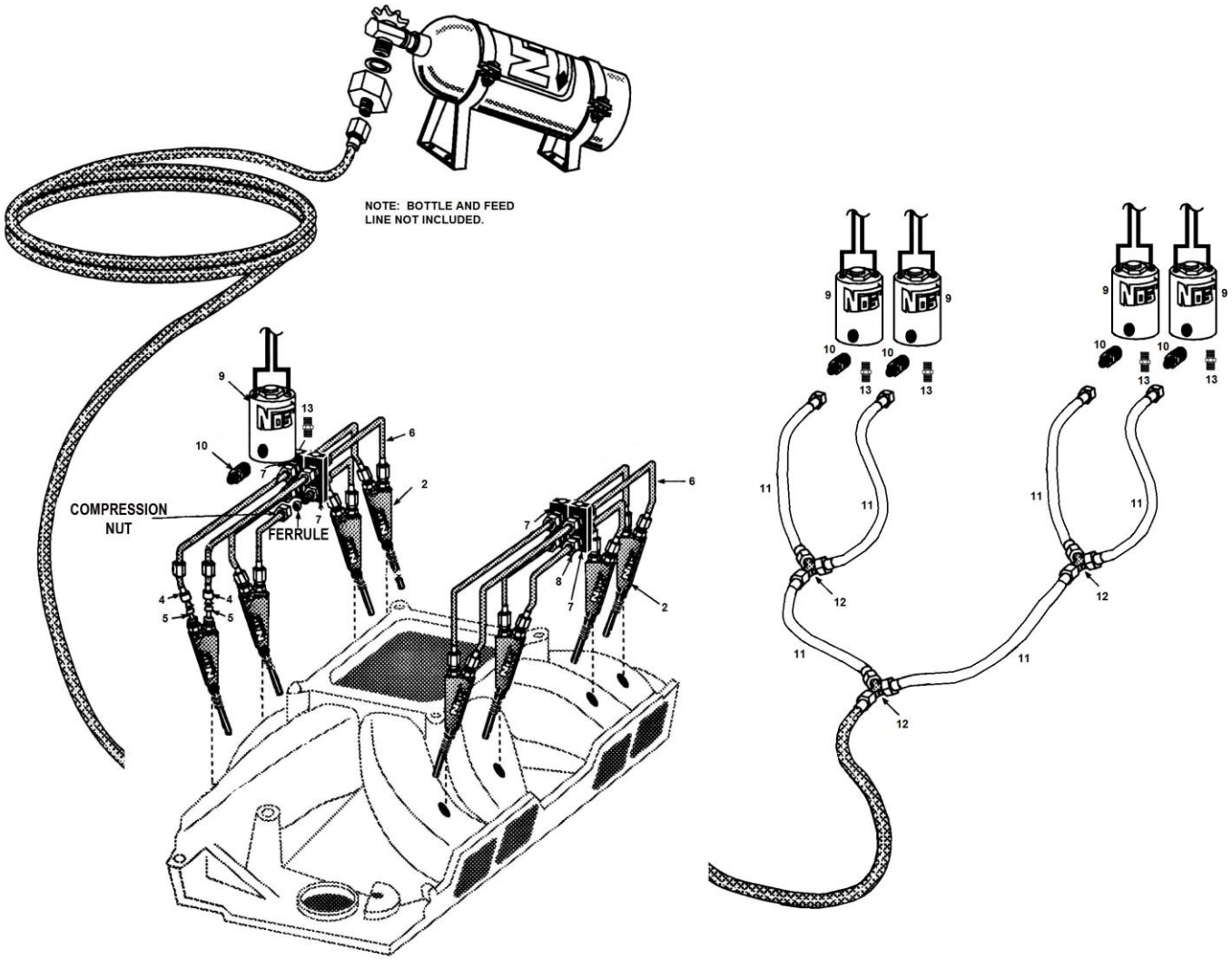

Chapter 2 Kit Installation (Typical Dry Fogger Kit)

NOTE: Numbers in parentheses ( ) refer to the parts list/assembly drawing number for the component. Figure 5 shows the typical installation for a Pro Fogger II System.

2.1 Fogger Nozzle Installation

Figure 5 & 6 display a typical Fogger nozzle installation location. Use this figure as a guide for locating your nozzles.

NOTE: P/N 04471NOS should have the fogger nozzle mounted perpendicular to the intake. The design of the “Super A” nozzle is such that the nitrous will flow at a 90º angle out of the nozzle tip. The 04472NOS should have the fogger nozzle mounted no more than a 30º angle relative to the intake manifold floor. The design of the “Annular” nozzle is such that the nitrous will flow straight out of the end of the nozzle tip.

NOTE: When mounting Fogger nozzles, ensure that the nozzles and feed lines do not interfere with fuel rails, fuel lines or engine components!

1. Mark the desired Fogger nozzle mounting locations on the intake manifold.

NOTE: When selecting mounting locations, note the discharge orientation of the nozzle. If possible, mount the nozzle so that the N_2O discharge orifice points down port, aimed at the intake valve head.

2. Remove the intake manifold from the engine.

3. Drill a 1/4” diameter hole into the intake manifold at each Fogger nozzle mounting location. For aesthetic purposes, all holes on each cylinder bank should be drilled to line up straight.

NOTE: Holes should be tapped just deep enough for the discharge orifice of the Fogger nozzle head to protrude through. Be careful not to tap holes too deep, as the Fogger nozzle may not adequately seal.

4. Tap each 1/4” hole with the 1/16” NPT tap (1).

5. Remove all debris from the intake manifold.

HINT: Apply PTFE paste to the threads of each Fogger nozzle before installing them in the manifold. This will help prevent vacuum leaks into the intake manifold.

6. Install a Fogger nozzle (2) into each 1/4” hole, orienting the nozzles so the discharge orifices are pointed down the manifold port toward the intake valve.

NOTE: The intake manifold can be installed on the engine any time after the fogger nozzles are secured in place.

7. Install the desired flare jets (5) in the Fogger nozzles.

Figure 3 Typical Dry Dual Stage kit installed—Single Plane or Tunnel Ram Intake

2.2 Fogger Nozzle Feed Tube Mounting

2.2.1 Nitrous Feed Tube Installation

NOTE: For professional looking results, the following steps need to be performed with a quality tube-bending tool. NOS sells a tool for this purpose under P/N 15991NOS.

NOTE: The fogger nozzles included in these kits are labeled with “FUEL” and “N20”. For these kits, both are intended to be used for nitrous (N20).

NOTE: If you are not experienced in tube bending, it is advisable that before you bend each solenoid extension tube, you make a sample tube using either a piece of brake line or a coat hanger. This “practice” will help you minimize errors and help you to produce an aesthetically pleasing plumbing job.

1. Install the four compression fittings into the blue distribution block (7). Remove the compression nuts and ferrules from the compression fitting bodies. Apply Loctite™ to the ¼”-24 threads on the distribution block fittings. Install and tighten all the fittings into the distribution block.

2. Select two of the 12” solenoid extension tubes, and measure 1” in from the flared end and mark. Install a Blue B-Nut (3) and Blue sleeve (4) on the flared end.

3. Make a 90° bend in the two solenoid extension tubes at the 1” mark. The bend should start at the 1” mark and proceed away from the end of the tube.

4. Install the two bent solenoid extension tubes and B-Nut assemblies on the nitrous inlet ports of the center two Fogger nozzles on one bank of the manifold, with the lone legs of the tube crossing. Measure between the insides of the tubes and place a center mark across both tubes. Refer to Figure 4.

Figure 4 Center Fogger Nozzle Feed Tubes

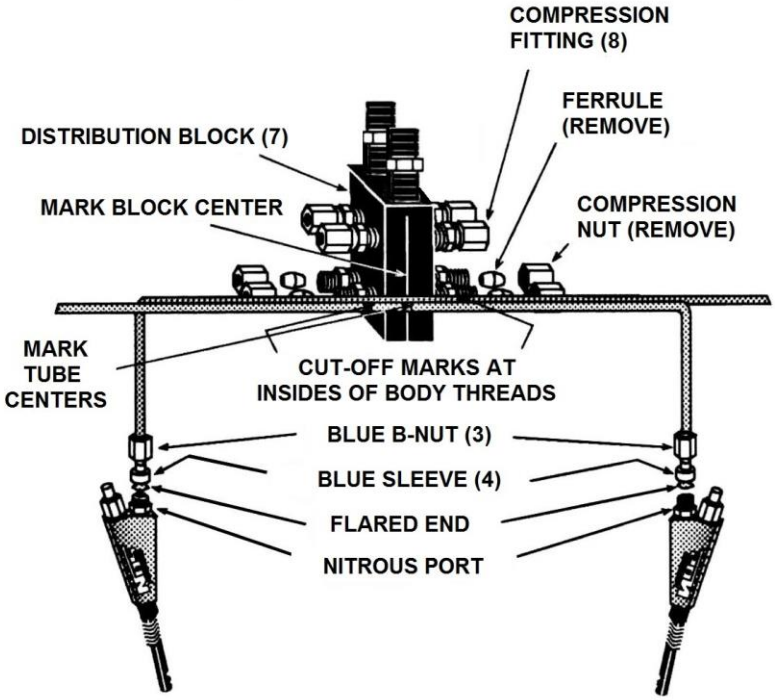

5. Measure and mark a centerline on the side of the distribution block.

6. Holding the ***marked*** block alongside the installed "crossed" fuel feed tubes, so that their center marks are aligned. Place another mark on each solenoid tube extension at the ***inside end*** of the two exposed compression fitting body thread sections. Refer to Figure 4.

7. Remove the two solenoid extension tubes. Cut off the tubes at the inside end marks. Deburr and ream the cut ends.

NOTE: Be sure to remove any debris, left from cutting and deburring, from the inside of the tube before assembly.

8. Install the compression fitting nuts and ferrules on the "smoothed" ends of the solenoid extension tubes.

9. Insert the solenoid extension tubes into the compression fitting bodies. Rotate the distribution block, so that it is positioned vertically. Lightly tighten the Blue B-Nuts onto the Fogger nozzle fuel port inlet fittings.

10. Attach and lightly tighten an unbent 12" solenoid extension tube, B-Nut, and ferrule on the fuel ports of the two outboard Fogger nozzles.

11. Insert and hold in place, the two unbent 12" solenoid extension tubes in the two upper ports of the distribution block, so that they intersect each of the two solenoid extension tubes that are attached to the outboard Fogger nozzles at 90° angles.

12. With your thumb and fore finger, bend the two tubes that are attached to the Fogger nozzles upwards, so that they intersect the horizontal tubes currently installed in the distribution block. Refer to Figure 6.

13. Place a mark on the outboard solenoid extension tubes at the **center** of the intersection with the horizontal tubes. Refer to Fig. 6.

14. Remove the two end nitrous tubes. Bend the tubes 90°. The tube should be placed in the tubing bender, such that the marks align with the "finished" bend mark on the tube bender. The bend should proceed away from the flared end.

15. Place a mark on the two installed nitrous solenoid extension tubes at the inside edge of the two exposed compression fitting body thread sections. Refer to Figure 4.

16. Remove the two nitrous solenoid extension tubes. Cut off the tubes at the inside end of the marks. Deburr and ream the cut ends.

NOTE: Be sure to remove any debris, left from cutting and deburring, from the inside of the tube before assembly.

Figure 5 Solenoid Extension Tube Installation

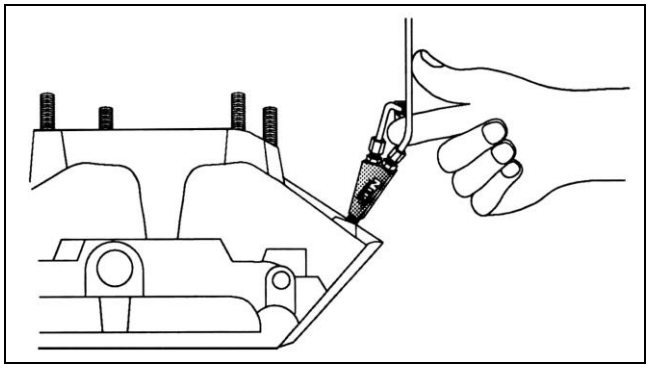

Figure 6 End Fogger Nozzle Feed Tubes

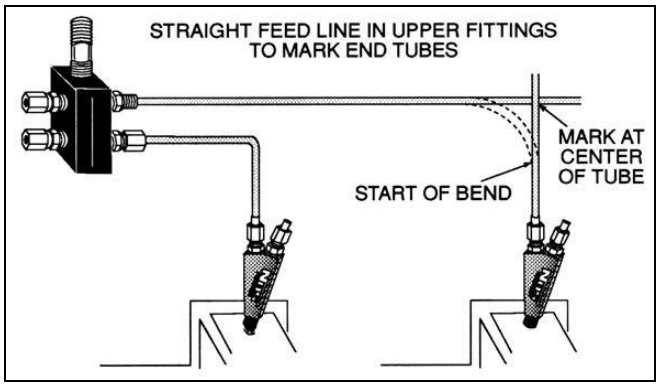

17. Install the compression fitting nuts and ferrules on the “smoothed” ends of the solenoid extension tubes.

18. Insert the solenoid extension tubes into the compression fitting bodies. Lightly tighten the compression nuts.

19. Connect and tighten the solenoid extension tubes to the Fogger nozzles.

20. Tighten all the nitrous tube fittings.

21. Repeat Steps 1-20 for the other side of the manifold.

2.3 Solenoid Mounting

Use the following procedures to install the nitrous solenoid (10)**.**

CAUTION: Do not over tighten the vise in the following procedure, or the solenoid will be damaged.

NOTE: Apply PTFE based paste to all pipe fittings before assembling solenoids.

2.3.1 Nitrous Solenoid Installation

1. Clamp the nitrous solenoid (9) in a bench vise.

2. Loosely install the 1/8” male nipple fitting (13) into the outlet port of the nitrous solenoid.

NOTE: 18048RNOS nitrous solenoid has 3 ports: inlet, outlet, and purge. The inlet is on the side marked IN, outlet is on the bottom with no stamp mark, and purge is on the side marked P.

3. Loosely install the nitrous filter fitting (10) into the inlet port of the nitrous solenoid.

4. Trial fit the solenoid, nitrous filter, and fitting in the nitrous distribution block. Note the orientation of the fitting and solenoid. Disassemble the fitting, nitrous filter, solenoid, and distribution block.

5. Reassemble the solenoid, fitting, nitrous filter, and distribution block using the PTFE paste. Tighten the connections to attain the desired mounting orientation.

6. Repeat steps 1-5 for the other cylinder bank.

2.4 Nitrous Solenoid Feed Line Installation

1. Install a 12” 6AN Hose (11) on each nitrous solenoid.

2. Connect each 12” 6AN Hose (11) to the blue 6AN Y fitting (12).

2.5 Main Nitrous Feed Line Mounting

HINT: Most late-model vehicles have access plugs in the trunk floor that are convenient for line routing. Following the fuel lines along the underbody, and entering the engine bay through the front fender well usually works well.

1. Determine the route for your nitrous feed line to follow. Ensure the path is clear of exhaust system, suspension, steering, wheels, electrical lines and components, and tires.

2. Feed the main nitrous supply line, along the proposed route.

3. If it is necessary to support the nitrous supply line under the vehicle, use 1/2” Tinnerman clamps or nylon tie-wraps to support the line securely.

4. Attach the nitrous supply line to the nitrous bottle valve adapter.

WARNING: Nitrous oxide is dangerous to humans if inhaled or comes in contact with the skin. Always point the nitrous line opening away from people when purging the line.

5. Purge the nitrous supply line.
   A. Wrap the end of the nitrous line with a rag and hold securely.
   B. Point the opening **away** from people.
   C. Briefly open the bottle valve.

6. Attach the nitrous supply line to the nitrous solenoid inlet port.

2.6 Electrical System

NOTE: Refer to Figures 7 & 8 and procedures in this section for electrical system installation.

NOTE: If you are running the system progressively with Holley EFI, you need to purchase **Holley PN 554-111** Solenoid Driver (quantity of 1 for each stage).

WARNING! Death or injury may occur from working on a charged electrical system.

The following shows how to wire to a Holley HP or Dominator ECU. For other ECU types, consult the appropriate wiring manuals.

1. Disconnect the car battery at the ground cable (if not already done).

2. Install an NOS arming switch (NOS P/N 15602NOS) in the vehicle interior, within easy reach of the driver.

3. Wire the arming switch. Figure 7 show a +12v input. Figure 8 shows either. Holley EFI can use either. Configure and Pin Map the software properly. Steps 4-6 show how to wire it as a 12v input, using a 3 pole lighted switch (NOS PN 15602NOS).

4. Connect the “N20 Enable” wire terminal from Holley EFI to the middle (#2) terminal on the arming switch.

5. Connect #1 terminal on the arming switch to the switched +12 volt power source.

6. Connect #3 terminal of the arming switch to the ground.

For Non-Progressive Systems, See Figure 7.

7. Install a wiring relay (NOS P/N 15618NOS) in the engine compartment near the battery. The relay’s orange wire should reach the battery (+) terminal.

8. Connect the orange relay wire to the battery (+) terminal.

9. Connect one wire from each solenoid together. Join the solenoid wires to the blue relay wire.

10. Connect the green relay wire to a good chassis ground.

11. Connect the red relay wire to Holley EFI, “N20 Stg 1 Out” for the first stage, and for a second stage connect to “N20 Stg 2 Out”.

12. Reconnect Battery

For Progressive Systems, See Figure 8.

The following uses **Holley EFI PN 554-111** which is a solid state relay driver. It is rated for up to 40 Amps maximum. One is needed for each stage.

13. Connect the fused Orange wire to battery (+) power.

14. Connect the blue wire to the solenoids for that stage (+).

NOTE: Do not swap the blue and orange wires (connect blue to battery and orange to solenoids), the relay will be damaged.

15. Connect the black/yellow trigger wire to the ECU. Note that this is a GROUND trigger. The Holley EFI software should be configured as a ground trigger only.

16. Reconnect the battery.

CAUTION: Make certain the nitrous bottle is closed and the fuel pump is not running. Failure to comply will result in the intake manifold being filled with nitrous and/or fuel creating a potential engine explosion on start up.

Figure 7 Typical Two Stage Fogger Wiring Schematic NON-PROGRESSIVE ONLY!!

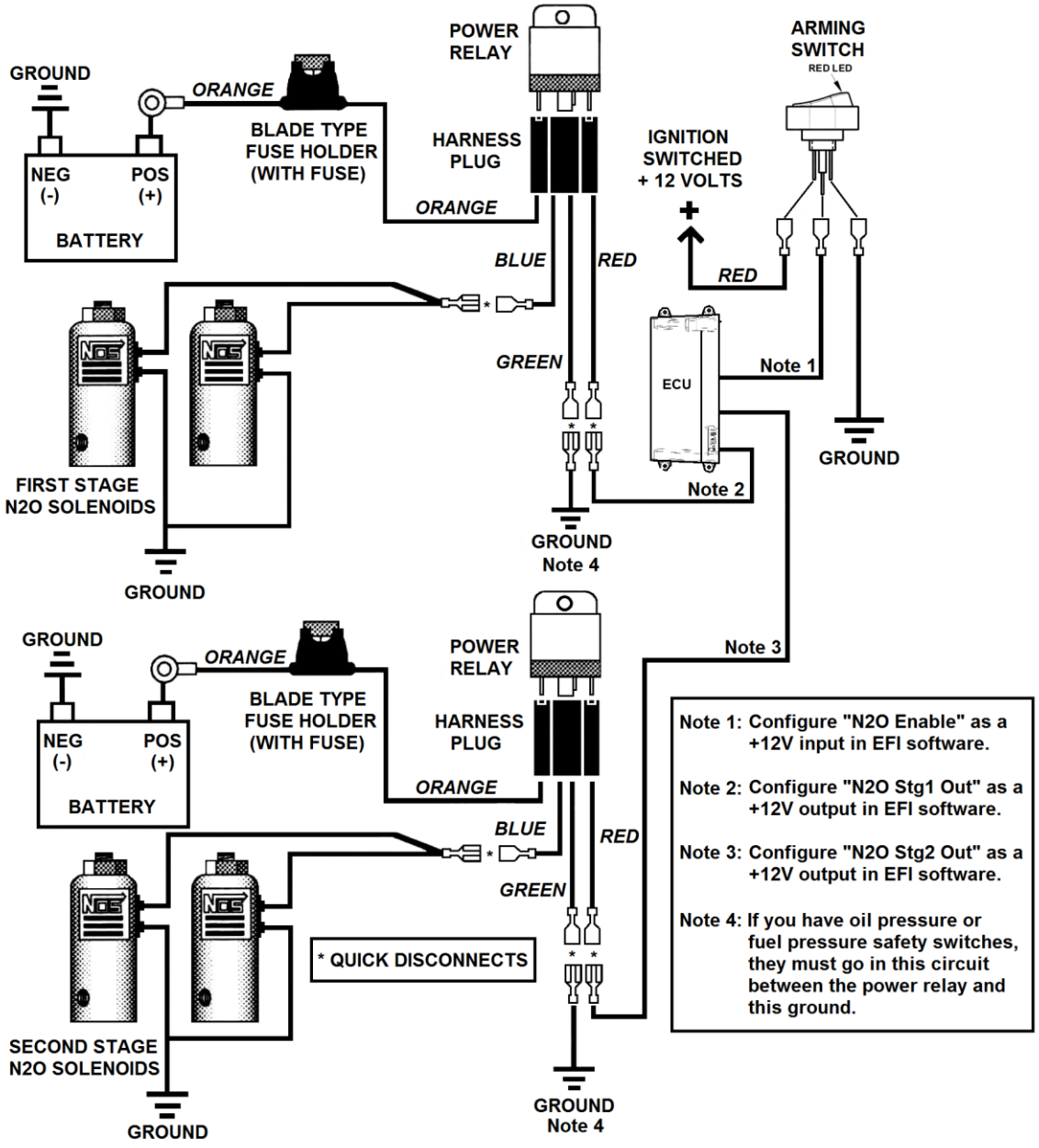

Figure 8 P/N 554-111 Nitrous Solenoid Driver

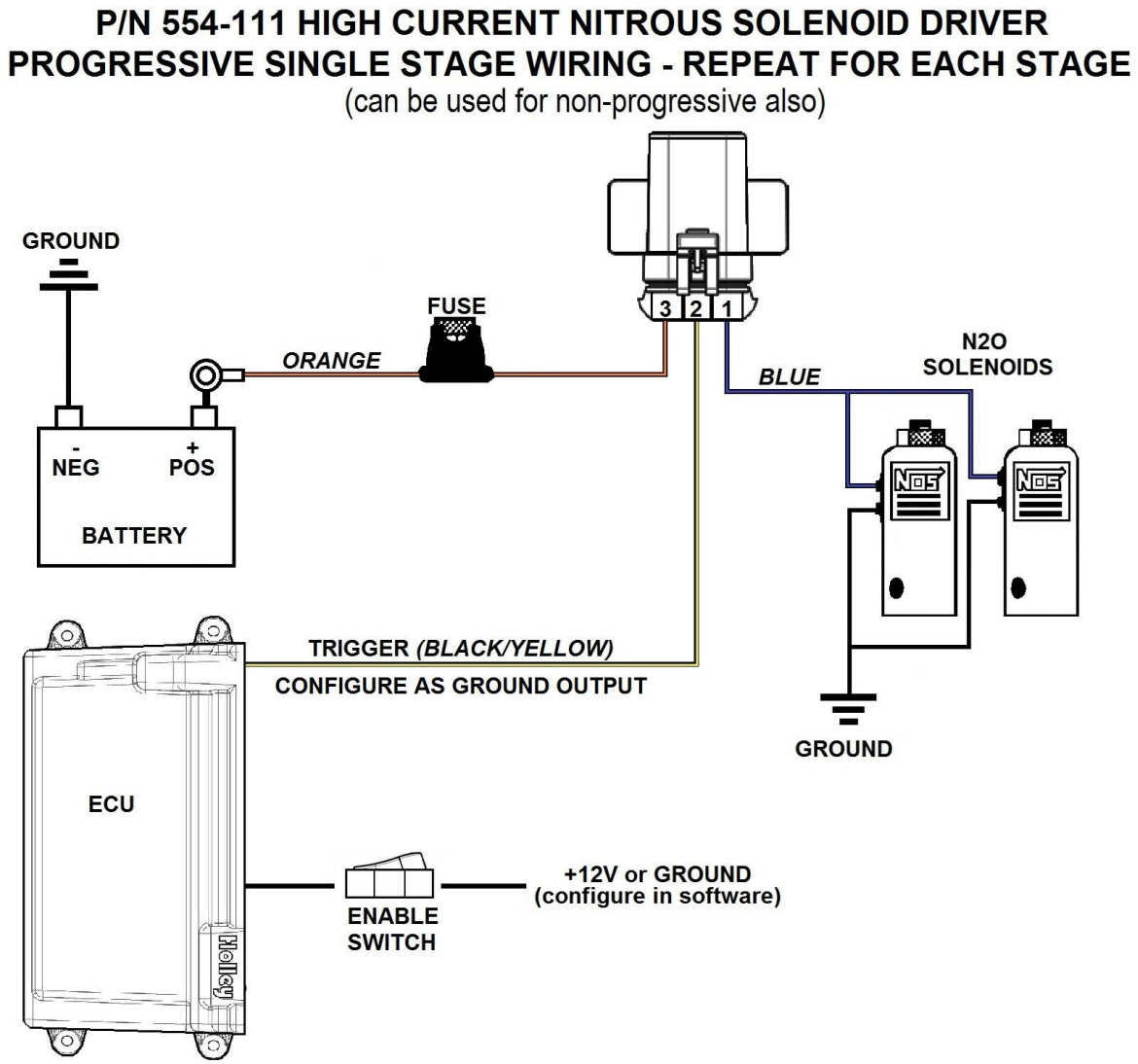

Chapter 3 Advanced Tuning for Maximum Power

3.1.A Determining Optimum Nitrous/Fuel Ratio

Dry nitrous systems inject the additional fuel necessary via extra fuel injector pulse width, unlike a wet system which adds it through fuel solenoids. An EFI controller must be used that has this capability, as does Holley HP and Dominator ECU's. Every engine is has different tuning requirement. Some EFI systems add extra fuel based on fuel flow in pounds/hours (lbs/hr). A decent starting point for most engines is to add an extra 30 lbs/hr hour of fuel per 100HP of nitrous added. Target Air/Fuel ratios vary on every engine, but you typically want to be around what the engine likes best without nitrous, typically in the 12.6-12.8 A/F range. In any case, the tuner needs to be knowledgeable to properly tune a dry nitrous system.

1. Stabilize the nitrous bottle pressure at 950 psi.

2. Perform a dynamometer pull or a full throttle pass down the racetrack. Note the power reading or vehicle mph (not e.t.). Examine the spark plugs for an indication of lean or rich nitrous/fuel conditions (refer to Figure 9 for tips on reading the spark plugs).

   2A. If spark plugs appear to be excessively rich, lean down the target air/fuel in the N2O table in the EFI software

   2B. If spark plugs appear to be excessively lean, richen up the target air/fuel in the N2O table in the EFI software.

   2C. If spark plugs have a "like new" appearance on the porcelain and electrode, do not make a fuel change.

3. Repeat steps 1 and 2 until the desired mixture is obtained.

Figure 9 Spark Plug Condition

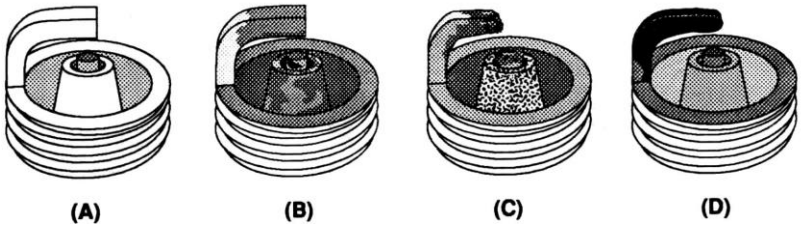

How to Read Spark Plugs from a Nitrous Oxide Injected Engine

A. Correct Timing, Mixture, and Spark Plug Heat Range
The ground strap retains a “like new” appearance. The edges are crisp, with no signs of discoloration. The porcelain retains a clear white appearance with no “peppering” or spotting.

B. Excessively Rich Mixture
The porcelain may be fuel stained, appearing brown or black. In extreme cases, the ground strap, electrode, and porcelain may be damp with gasoline, or smell of fuel.

C. Detonation
The edges of the ground strap may become rounded. The porcelain has the appearance of being sprinkled with pepper, or may have aluminum speckles. During heavy detonation, the ground strap tip may burn off. This phenomena can result from excessive ignition timing, too high a heat range spark plug, or inadequate fuel octane.

D. Excessively Lean Mixture
The edges of the ground strap may become rounded. Under moderate overheating, the tip of the ground strap can discolor, usually turning purple, or the entire ground strap can become discolored.

3.1.B Determining Optimum Ignition Timing

Determining the correct ignition timing for an engine using nitrous oxide is not cut and dry as it is dependent on many variables. Variables such as piston design, combustion chamber size and design, valve angle, fuel type, nitrous system design, and other factors all play a critical role as to what timing a specific engine/vehicle combination needs. When running larger amounts of nitrous, it is critical that the proper ignition timing be run as well as the proper spark plug heat range.

There is one specific timing that is most ideal for a specific engine and nitrous tune-up. In the end the best and correct method to determine timing in a car is to read the spark plugs.

Due to all these variables, it is difficult to recommend a generic timing for a given amount of nitrous. However the information below is intended to provide a starting point. After this, it is best to use the spark plugs as an indicator as to what timing a specific engine requires. The spark plugs also will help with nitrous and fuel jetting as well as fuel pressure needs.

One large variable that drives the ideal ignition timing is the “combustion efficiency”. This is a combination of the cylinder head valve angle, combustion chamber size and burn characteristics, and piston dome design among other things. The more efficient the overall combustion efficiency is, the less timing is needed with nitrous. Note that when running large amount of nitrous, the old school rule of “take out two degrees per 50 HP of nitrous” is not ideal or wise.

The following timing recommendations below are based on nitrous HP amounts and a factor called “Combustion Efficiency”. Combustion Efficiency takes into account the piston dome, chamber size, valve angle, and other factors. It is split up into three categories, “High”, “Medium”, and “Low”. The following reviews these:

“High” – An engine with an exceptionally efficient and quick burn rate when running nitrous. Typically this would have a piston with a dish, flattop, or very small, flat dome design. Combustion chambers are small and valve angles are greatly reduced from the “factory” valve angle. Generic examples are engines with current high end race heads that have valve angles reduced 7-11 from stock, very small combustion chambers, and flat top piston that still maintain 13-14:1 compression ratios.

“Medium” – An engine with a small and efficient chamber. An example could be a SBC with an 18 degree head with a moderate piston dome.

“Low” – Older engines with factory valve angles. Pistons may have large domes to maintain high compression ratios - large, open combustion chambers. An example would be a BBC engine with a 119cc open chamber and large dome piston.

The following are some initial recommendations for timing. Be conservative and read your plugs. Run an 1/8th mile hit rather than a ¼ mile pass to start to see initial plug strap readings. The “Plug” recommendation is based on NGK heat ranges. An equivalent Autolite or other brand can be used.

Table 3 Suggested Baseline Timing Combinations

Nitrous HP	Combustion Efficiency	Timing	NGK Spark Plug or Equiv.	Fuel/Octane
100	Low	32	Stock	93+
100	Medium	30	Stock	93+
100	High	28	Stock	93+
125	Low	31	Stock/-7	100+
125	Medium	29	Stock/-7	100+
125	High	27	Stock/-7	100+
150	Low	29	-8	100+
150	Medium	27	-8	100+
150	High	25	-8	100+
175	Low	27	-9	110+
175	Medium	25	-9	110+
175	High	23	-9	110+
200	Low	24	-9	110+
200	Medium	22	-9	110+
200	High	20	-9	110+
250	Low	22	-10	112+
250	Medium	20	-10	112+
250	High	18	-10	112+
300	Low	20	-11	114+
300	Medium	18	-11	114+
300	High	16	-11	114+
350	Low	18	-11	114+
350	Medium	16	-11	114+
350	High	14	-11	114+
400	Low	16	-11	116+
400	Medium	14	-11	116+
400	High	12	-11	116+
500	Low	12	-11	116+
500	Medium	10	-11	116+
500	High	8	-11	116+
600	Low	8	-11	116+
600	Medium	6	-11	116+
600	High	2	-11	116+

Chapter 4 Routine Maintenance

4.1 Nitrous Solenoid Filter

When nitrous bottles are refilled, they can become contaminated with debris, if the refiller does not have an adequate filter in his transfer pump mechanism. Contaminants in the bottle will eventually become lodged in the nitrous solenoid filter fitting.

You should periodically (after every 20-30 pounds of nitrous usage) examine the mesh in the nitrous filter for debris.

To clean the filter, follow the following steps:

1. Close the valve on the nitrous bottle.
2. Empty the main nitrous feed line.
3. Disconnect the main nitrous feed line from the nitrous solenoid.
4. Remove the nitrous filter fitting from the nitrous solenoid.
5. Remove **all** PTFE paste debris from the solenoid inlet port threads and from the nitrous solenoid filter pipe threads.
6. Examine the mesh in the nitrous filter fitting for contaminants. Blow out debris with compressed air, if necessary.
7. Apply fresh PTFE paste to the nitrous filter pipe threads. Reinstall the filter in the nitrous solenoid.
8. Reconnect the main nitrous supply line to the nitrous solenoid.

4.2 Nitrous Solenoid Plunger

4.2.A General Information

The seals used in NOS nitrous solenoid plungers are constructed from materials, which are designed to be used with nitrous oxide. When kept free from fuel contaminants or from overpressurization, they should provide trouble free performance.

You should periodically (after every 20-30 pounds of nitrous usage) examine the seal in the nitrous solenoid plunger.

Due to the Pro Fogger System being a wet manifold style nitrous kit, the nitrous solenoid plunger will get exposed to fuel vapors. This is unavoidable. Fluctuations in the intake manifold pressure due to opening and closing of the throttle induce flow into and out of the NOS injector plate spray bars (nitrous and fuel), when the NOS system is not in use. Long term exposure of the nitrous solenoid plunger seal to the fuel vapors will result in swelling of the plunger seal. This will reduce the nitrous flow (causing an excessively rich nitrous/fuel condition and a loss of power).

The seals used in NOS nitrous solenoid plungers are designed to work at pressures up to 1100 psi. Exposing the plunger to excessive pressure (whether the vehicle is sitting or in-use) can result in the seal in the plunger swelling or in extreme cases disintegrating.

NOTE: The seals are designed so that if they fail due to overpressurization, they will not leak, the valve will just fail to flow nitrous oxide.

Swelling of the nitrous solenoid plunger seal will reduce nitrous flow (causing an excessively rich nitrous/fuel condition and a loss of power).

4.2.B Nitrous Solenoid Plunger Disassembly and Inspection

1. Close the valve on the nitrous bottle.
2. Empty the main nitrous supply line.
3. Remove the retaining nut from the nitrous solenoid.
4. Remove the coil and housing from the nitrous solenoid base.
5. Unscrew the stem from the nitrous solenoid base. Do this by double nutting the stem, or by using a solenoid stem removal tool. **Do not use pliers on the solenoid stem. Damage to the stem will result.**
6. Remove the stem, spring, and plunger from the solenoid base.

7. Examine the plunger seal for swelling. The seal surface should be flat, except for a small circular indentation in the center of the seal;

   A fuel-contaminated seal will protrude from the plunger and be dome-shaped. A fuel-contaminated seal may return to its original shape if left out in the fresh air for several days. It may then be returned to service.

   A seal, which has been overpressurized, may be dome-shaped, or the sealing surface may be flat with the seal protruding out of the plunger. A dome-shaped seal may return to its original shape if left out in the fresh air for several days. It may then be returned to service. A seal, which is flat, but protrudes from the plunger body has probably failed internally and should be replaced.

Figure 10 Exploded View of a Typical Solenoid

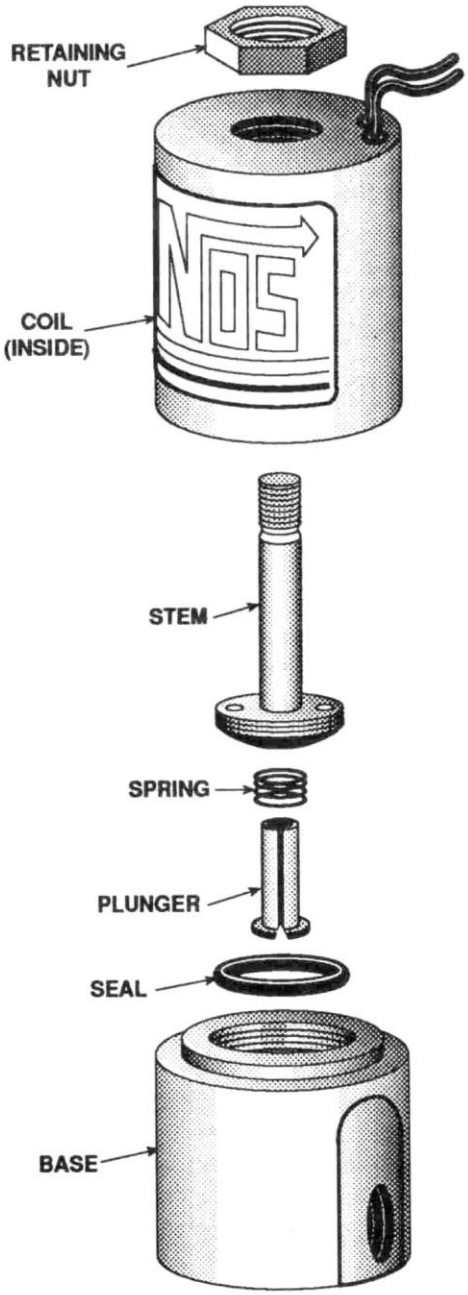

Appendix A Troubleshooting Guide

The troubleshooting chart on the following pages should help determine and rectify most problems with your installed NOS system. If you still need assistance determining or fixing problems, call NOS Technical Support Department.

PROBLEM	POSSIBLE CAUSES	DIAGNOSTIC PROCEDURE	CORRECTIVE ACTION
Change in engine speed when nitrous bottle valve is opened	Malfunctioning N20 solenoid.	Remove and inspect solenoid.	Repair/replace solenoid.
Engine runs rich when system is activated.	Bottle valve not fully opened.	Check bottle valve.	Open valve fully.
	Bottle mounted improperly.	Check bottle orientation.	Mount bottle properly.
	Plugged nitrous filter.	Inspect filter.	Clean/replace filter.
	Low bottle pressure.	Check bottle temperature.	Set bottle temperature to 80° to 85°F.
	Inadequate N20 supply.	Weigh bottle.	Fill bottle.
	EFI tuning too rich	Look at A/F ratio on datalog	Tune properly
	Excessive fuel pressure.	Check fuel pressure, make sure it was as intended	Adjust
	Loose N20 solenoid wiring.	Inspect the solenoid wiring.	Repair wiring.
	Malfunctioning nitrous solenoid.	**WARNING:** *Solenoid discharges nitrous at a high rate. Don't inhale nitrous; death may occur. Skin contact may cause frostbite.* Close bottle valve. Disconnect the solenoid outlet port. Disconnect the solenoid (+) lead. Open the nitrous bottle valve. Briefly connect the +12V to the solenoid. Solenoid should discharge N_2O at a high rate.	Rebuild solenoid.
No change in performance when system is activated.	System wired incorrectly.	Compare nitrous wiring to schematic.	Wire system per instructions.
	Loose ground wire(s).	Connect 12V test light to battery (+) terminal. Check for continuity at grounds noted in schematic.	Tighten/repair loose ground(s).
	Malfunctioning pushbutton.	Turn bottle valve off. Turn arming switch on. Connect 12V test light to battery (-). Turn pushbutton switch ON. Check for continuity at pushbutton output pole.	Replace pushbutton.
	No power to arming switch.	With vehicle ignition on, connect 12V test light to battery (-) terminal. Check for power at pole #1 on arming switch.	Repair wiring.
	Malfunctioning arming switch.	With vehicle ignition on, turn arming switch ON. Connect 12V test light to battery (-) terminal. Check for power at red wire on arming switch.	Replace arming switch.
	Malfunctioning throttle microswitch.	Temporarily disconnect power relay green wire from microswitch. Connect 12V test light to battery (+) terminal. Manually set microswitch ON. Check for continuity at microswitch positive terminal (see wiring schematic).	Replace throttle microswitch.
	Overly rich fuel condition.	Check for black smoke or backfiring through exhaust with system activated.	Install smaller fuel jet or decrease fuel pressure.
Engine detonates mildly when system is activated.	Excessive ignition timing.	Check ignition timing.	Reduce timing in 2° increments, up to 8° from non-nitrous conditions.
	Inadequate octane fuel.		Use higher octane fuel; up to 116VPC-16.
	Spark plug heat range too high.		Reduce spark plug heat range (maximum 2 steps).
	Too much nitrous flow.		Reduce nitrous jetting.

Engine detonates heavily when system is activated.	Inadequate fuel delivery due to: Plugged fuel filter.	Inspect fuel filter.	Clean or replace filter.
	Crimped fuel line.	Inspect fuel line.	Replace crimped line.
	Weak fuel pump.	Install fuel pressure gauge, or log with datalogger. Run engine under load at wide-open throttle, with system activated.	Repair/replace fuel pump.
High rpm misfire when system is activated.	Excessive spark plug gap.	Inspect spark plugs.	Set spark plug gap at 0.025” to 0.030”.
	Weak ignition/ignition component failure.	Inspect components (plug wires, distributor cap, etc.)	Replace worn components.
Surges under acceleration when system is activated.	Inadequate supply of nitrous.	Check bottle weight.	Replace with full bottle.
	Bottle mounted incorrectly.	Compare bottle position and orientation to instructions.	Mount or orient bottle correctly.