#40100, #40100-09
Chrysler 383, 400, 426,440c.i. Power Steering Bracket

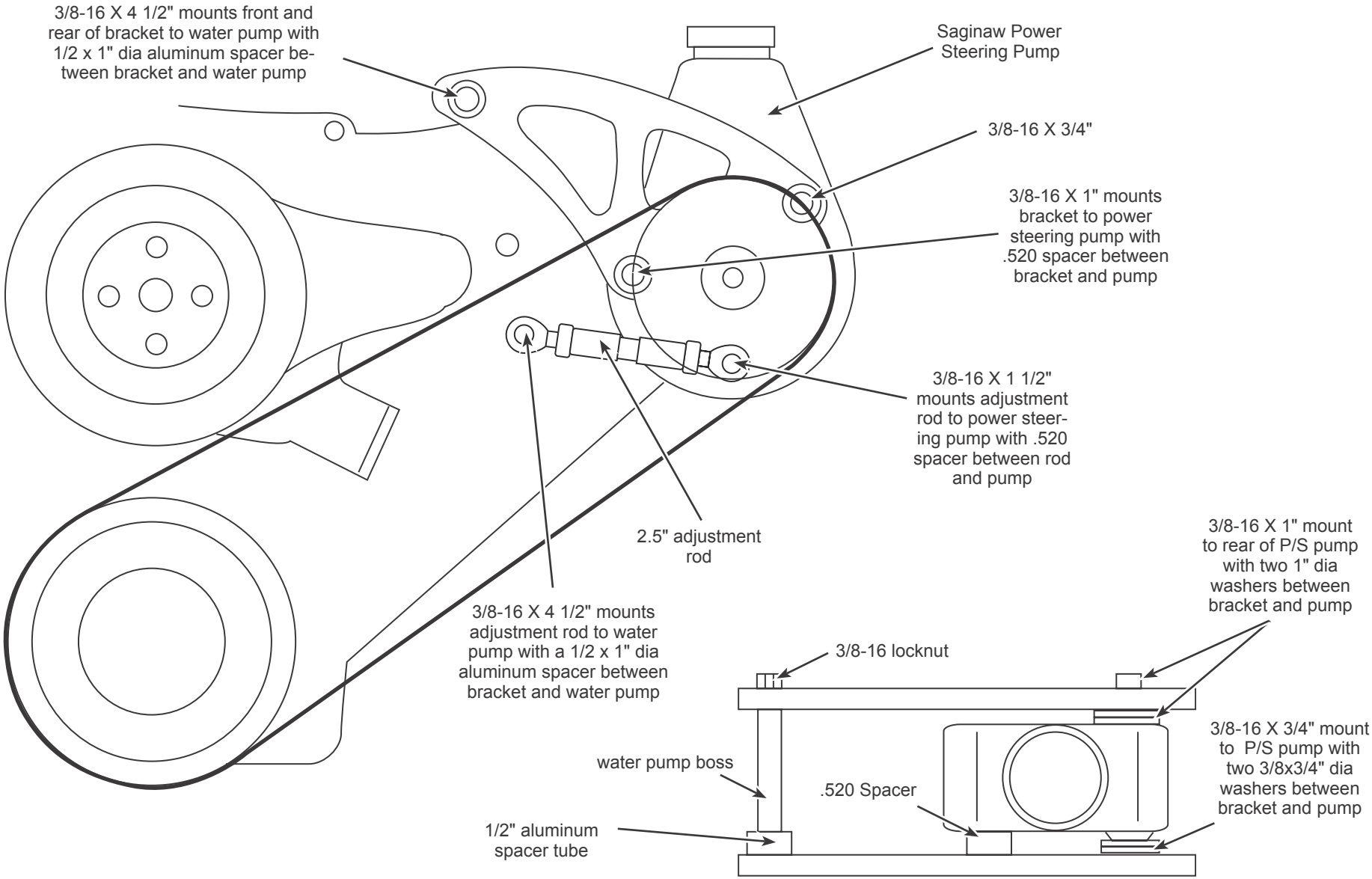

Top View Mopar Power Steering Braket