#40510 & 40515 Serpentine Kit
#40010 #40020 #40010-09 #40020-09
Chrysler 383, 400, 426,440c.i. Alternator Bracket

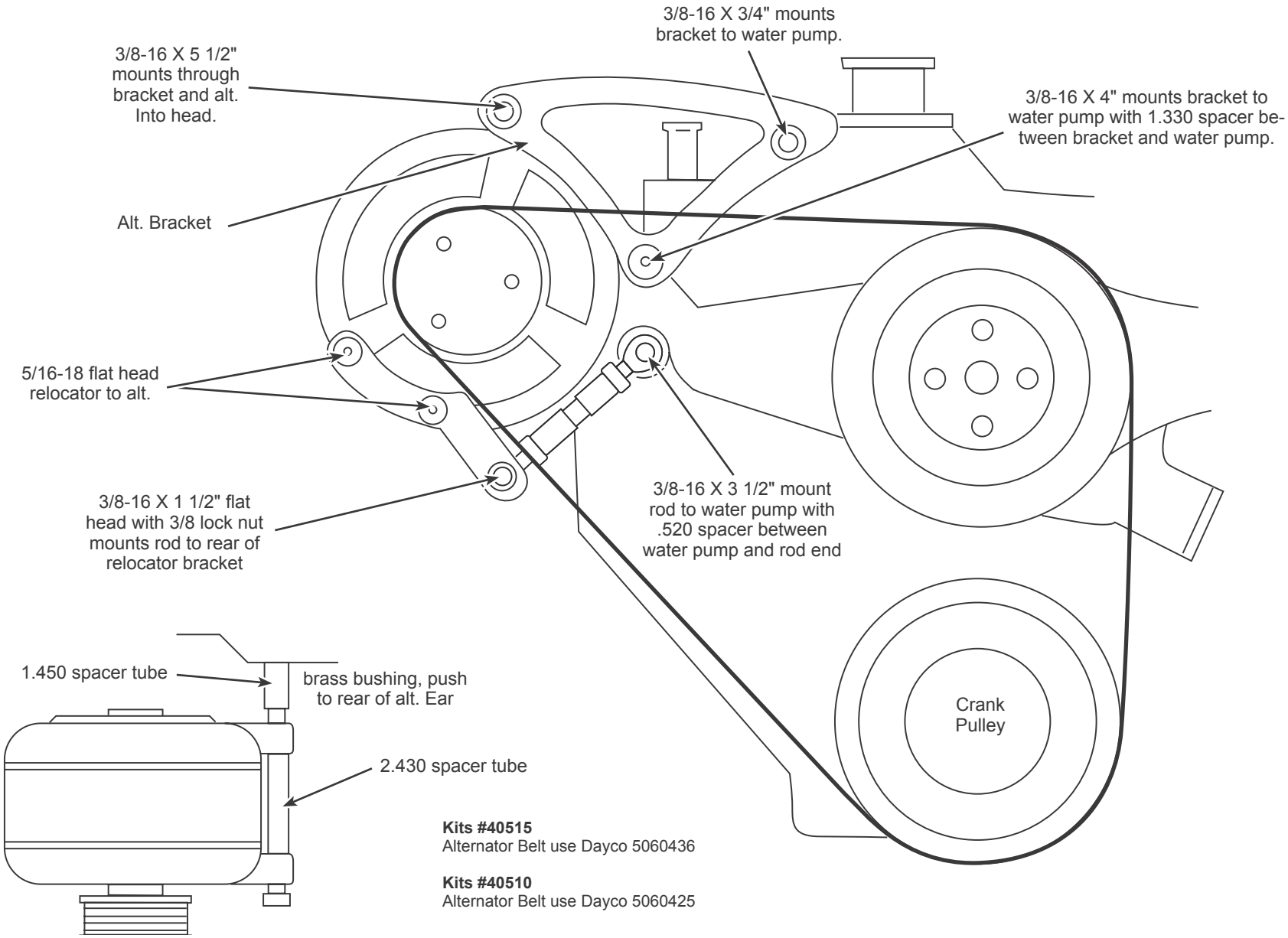

Kits #40515
Alternator Belt use Dayco 5060436

Kits #40510
Alternator Belt use Dayco 5060425

Check out the collection of performance starting and charging we offer.