MARCH
PERFORMANCE PULLEYS & BRACKETS

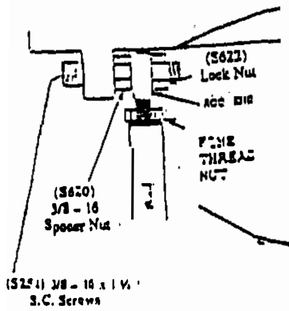

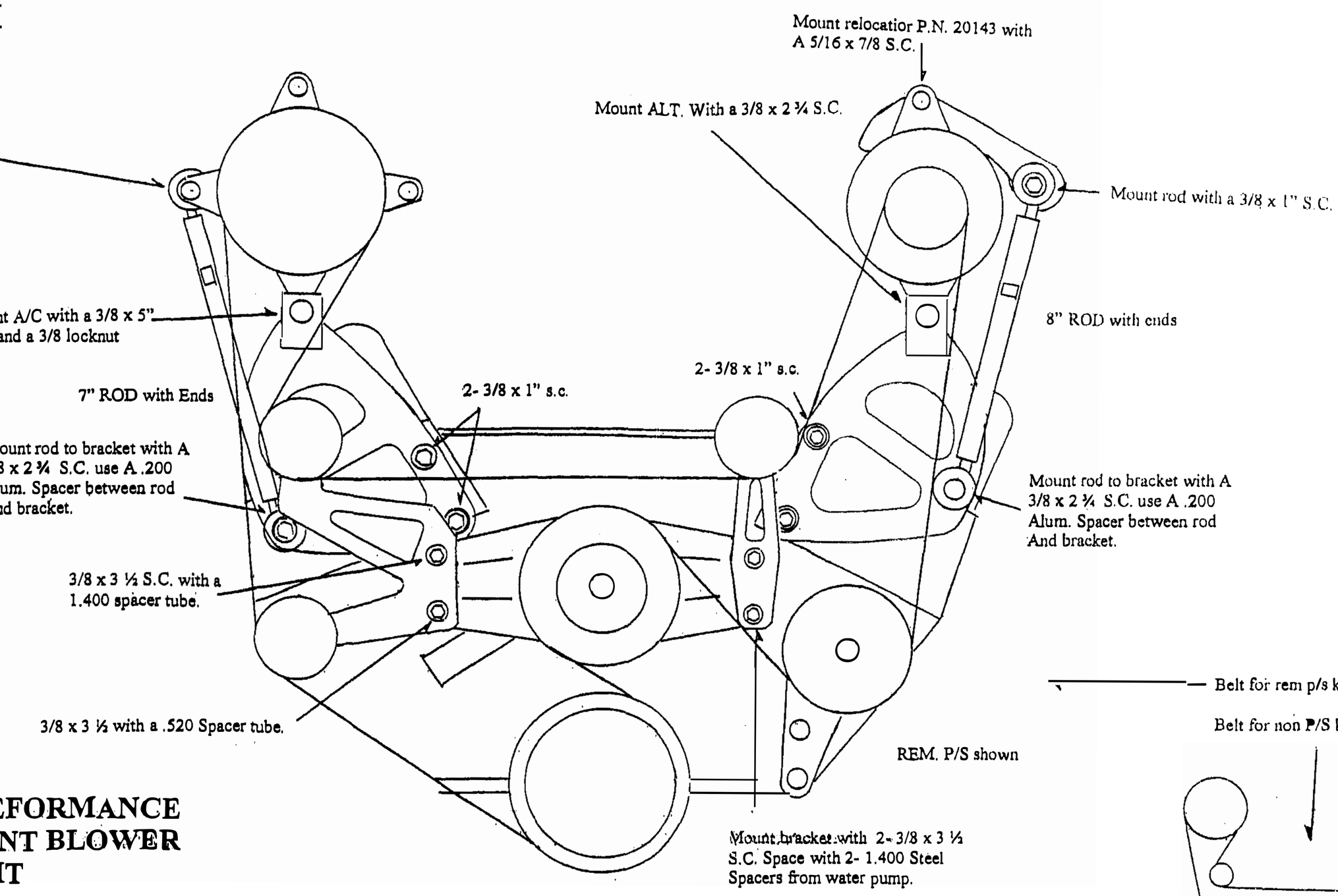

MARCH PEFORMANCE HIGH MOUNT BLOWER KIT

20830 – 20833

20184 / 20186