20315 Chevy Big Block Low Mount Alternator Bracket

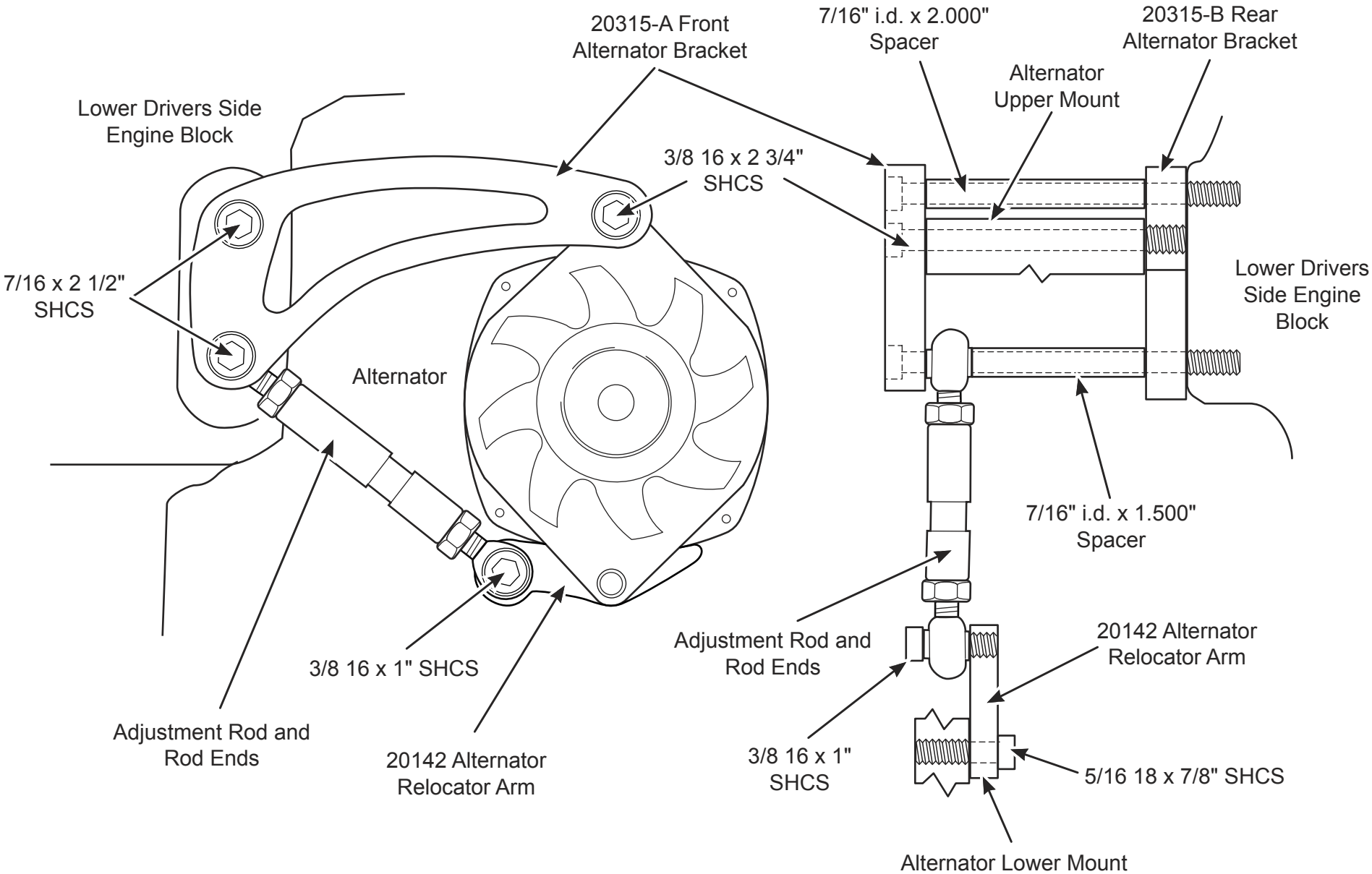

Check out the collection of performance starting and charging we offer.