Chevy Small Block Short Water Pump Alternator Bracket

Part# 20131, 20431, 20432

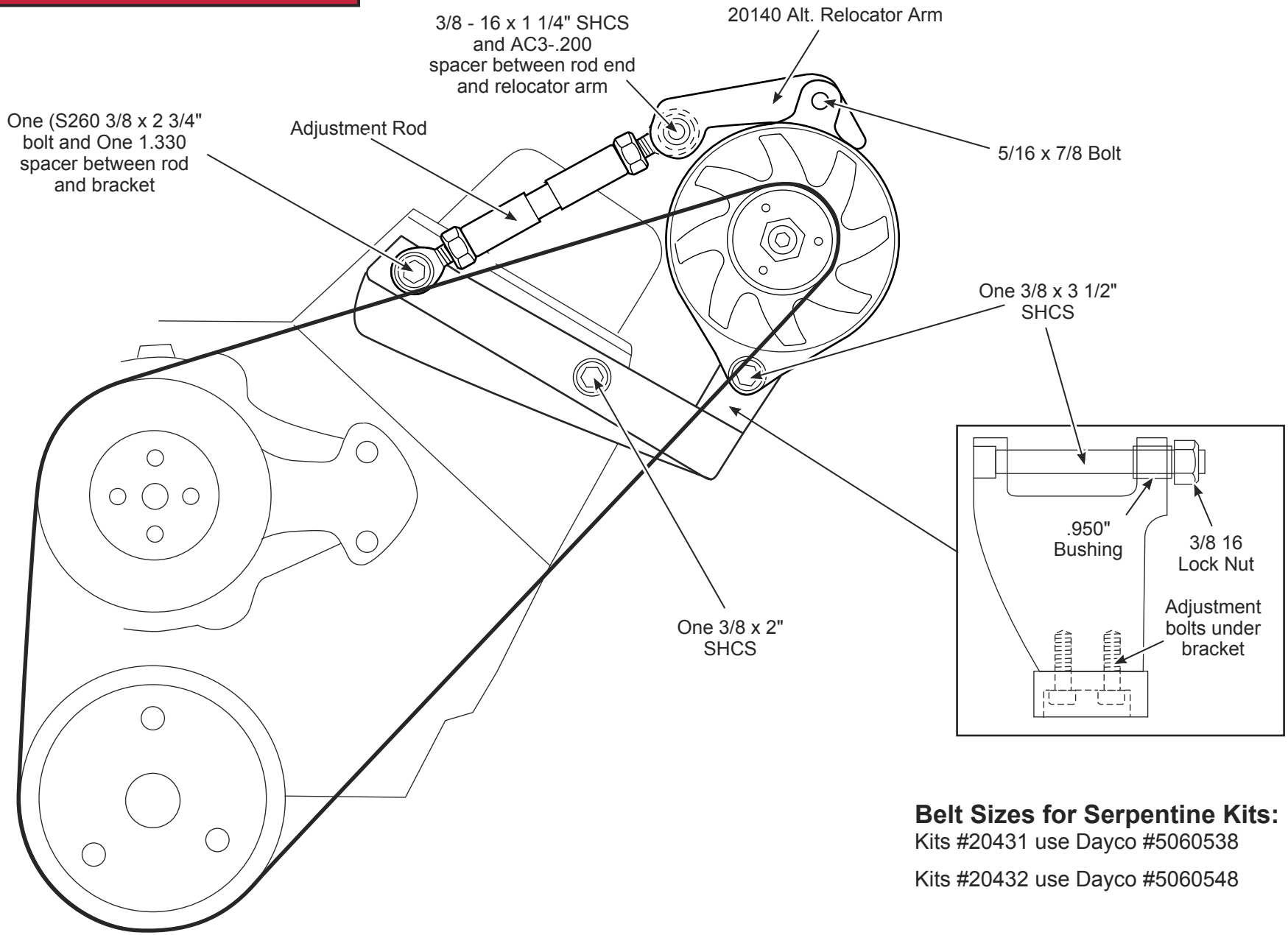

Belt Sizes for Serpentine Kits:

Kits #20431 use Dayco #5060538

Kits #20432 use Dayco #5060548