MARADYNE HIGH PERFORMANCE FANS

CHAMPION SERIES

Model M163K - 16”

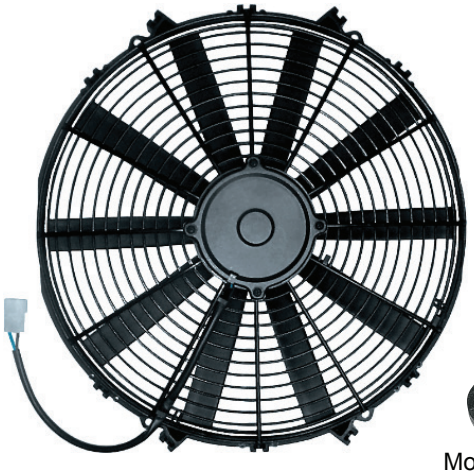

Mounting Feet

- Lowest profile high performance puller fan on the market
- Sealed motor tested in accordance with DIN EN 60529, dust and water proof to IP68
- Quiet, reversible S-blade design
- All glass-filled nylon construction
- Includes (4) 90° mounting feet
- Includes locking mating pigtail connector and rubber spacers for proper spacing off of heat exchanger
- Recommended wire harnesses* (sold separately)
  - Part No. MFA100 (adjustable thermostat)
  - Part No. MFA102 (185° temperature switch)
  - Part No. MFA103 (195° temperature switch)
- Optional brackets* (sold separately)
  - Part No. MFA104 (metal bracket strips)
  - Part No. MFA105 (aluminum brackets)

Fan Harness

Pigtail

TYPICAL PERFORMANCE DATA
M163K 16˝ LP PULLER CHAMPION 12V 130W

Static In H_20	Total Flow CFM	13.5 VDC AMPS
0.00	1408	8.5
0.10	1271	9.0
0.20	1112	9.3
0.30	921	9.5
0.40	686	9.5
0.50	458	9.5
0.60	286	9.5
0.70	STALL @ 0.75˝	9.4

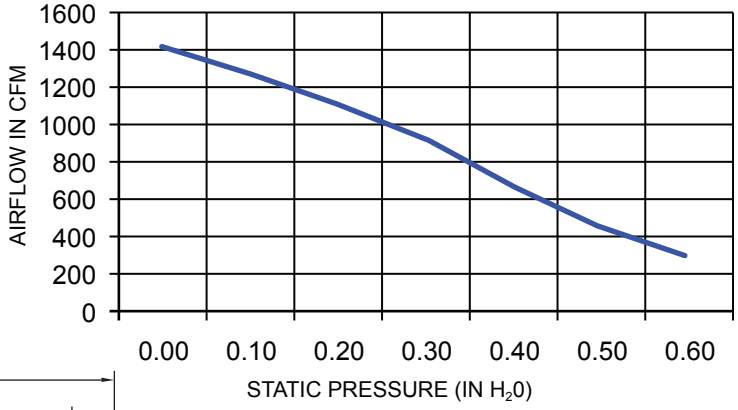

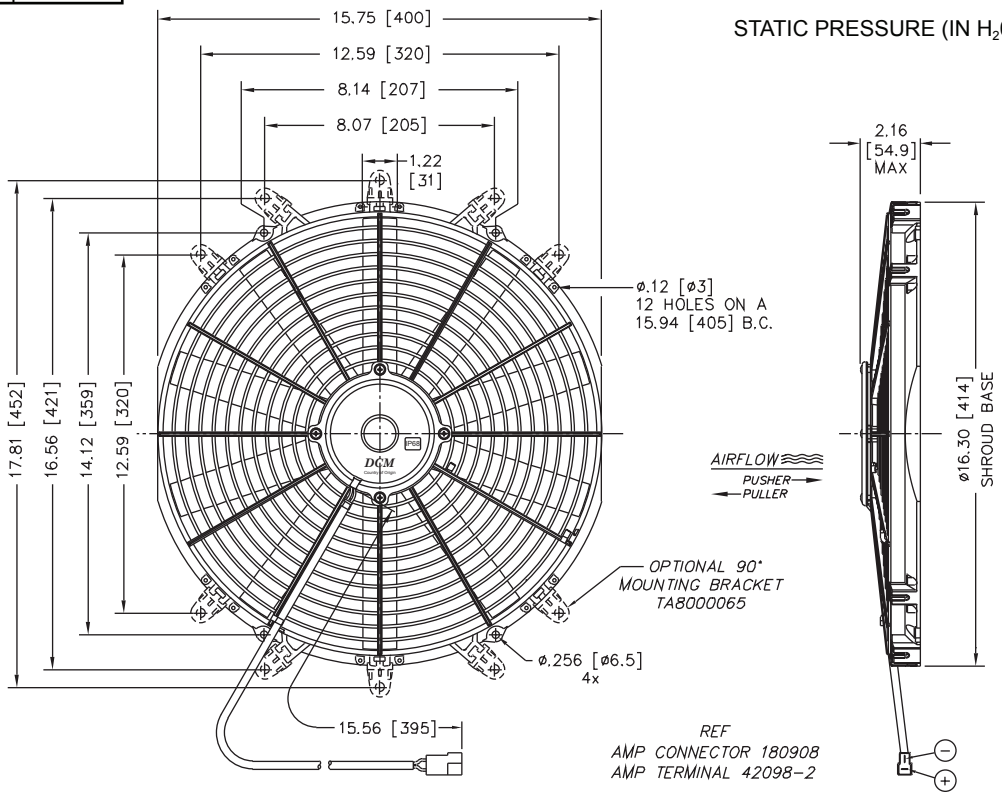

Learn more about performance engine cooling we have.