MARADYNE® HIGH PERFORMANCE FANS

CHAMPION SERIES

Model M143K - 14”

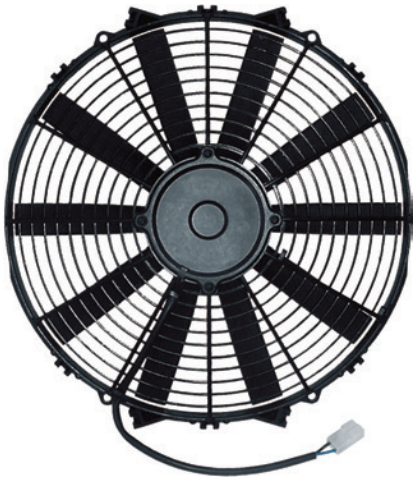

- Lowest profile high performance puller fan on the market
- Sealed motor tested in accordance with DIN EN 60529, dust and water proof to IP68
- Straight blade design
- All glass-filled nylon construction
- Includes (4) 90° mounting feet
- Includes locking mating pigtail connector and rubber spacers for proper spacing off of heat exchanger
- Recommended wire harnesses* (sold separately)
  - Part No. MFA100 (adjustable thermostat)
  - Part No. MFA102 (185° temperature switch)
  - Part No. MFA103 (195° temperature switch)
- Optional brackets* (sold separately)
  - Part No. MFA104 (metal bracket strips)
  - Part No. MFA105 (aluminum brackets)

Mounting Feet

Fan Harness

Pigtail

TYPICAL PERFORMANCE DATA
M143K 14˝ LP PULLER CHAMPION 12V 130W

Static In H_20	Total Flow CFM	13.5 VDC AMPS
0.00	1163	6.4
0.10	1032	6.8
0.20	890	7.1
0.30	731	7.2
0.40	527	7.1
0.50	349	7.1
0.60	191	7.0
0.70	STALL @ 0.7˝	6.9

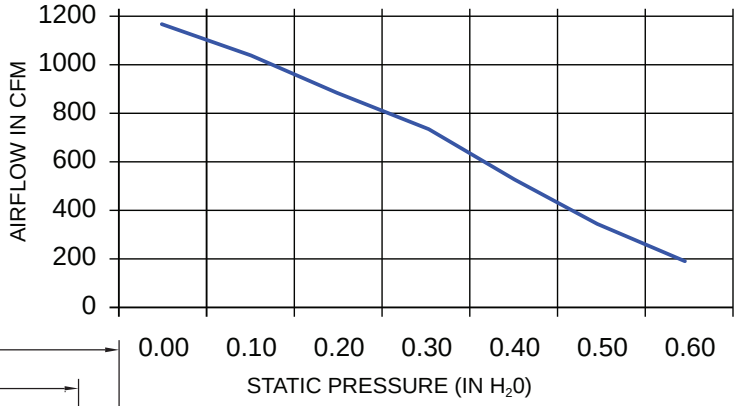

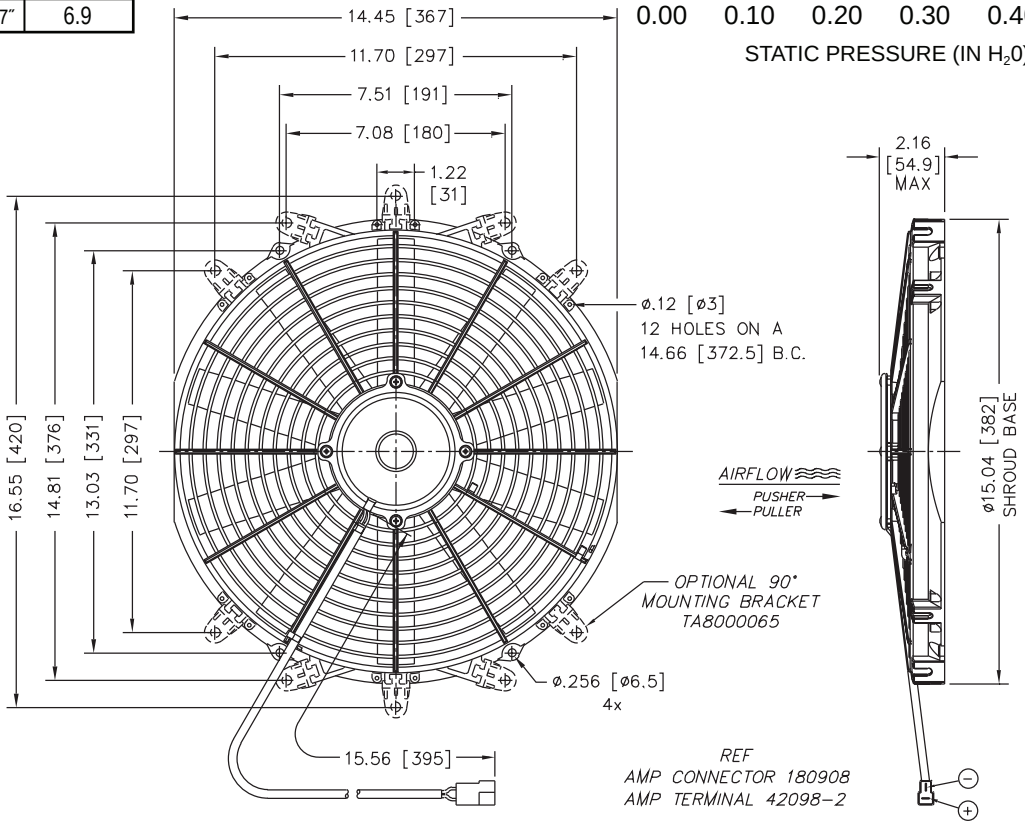

Learn more about performance engine cooling we have.