LuK clutch course

Introduction to clutch technology for cars and LCVs

SCHAEFFLER
AUTOMOTIVE AFTERMARKET

1 Development history of clutch technology

During the course of over 100 years of automotive history, almost all components have undergone enormous technological development. Reliability, production costs and ease of maintenance, as well as environmental compatibility have been and continue to be the criteria demanding new and better solutions from automotive engineers. Most of the basic designs were known early on, but only the availability of new materials and machining methods allowed them to be realized. It was not until the start of the 20th century that the internal combustion engine finally prevailed over the competing steam and electricity-based automotive drive concepts on a large scale. In 1902, a petrol engine vehicle broke the overall speed record for the first time; before that, electric and steam-powered vehicles had set the standards, and proponents of the three drive concepts continued to compete for the absolute speed record throughout the first decade of the 20th century. Steam and electric drives have a decisive advantage over motorized vehicles with liquid fuels – as they used to be called: Thanks to the almost ideal torque band, they required neither clutches nor transmissions, and so were easier to operate, less susceptible to malfunction and simpler to maintain. As an internal combustion engine only delivers its output at engine speed, there must be a division between engine and transmission. The speed-dependent drive principle of the petrol engine requires a mechanical aid for starting, as sufficient output (torque) is available only after certain engine speeds have been attained. Besides the function of a start-up clutch, however, that of a dividing clutch is equally important, since it allows load-free gear changing while driving. Due to the complexity of the related problems, many smaller vehicles in the early years of automotive design did not have a start-up clutch. The motor car had to be pushed into motion. The operating principles of the first clutches originated in the mechanized factories of early modern industry. By analogy with the transmission belts used there, flat leather belts were now introduced into motor cars. When tensioned by a tensioner pulley, the belt transmitted the drive power of the engine's belt pulley to the drive wheels. When loosened, it slipped through – i.e. disengaged. However, this procedure caused the leather belts to wear out fast. So a new tactic was adopted of installing an idler pulley of the same size in addition to the drive belt pulley. By moving a lever, the transmission belt could be guided from the idler pulley onto the drive pulley. The motor car patented by Benz in 1886, which Bertha Benz used to make the first long distance journey in the history of motor vehicles – from Mannheim to Pforzheim – already operated using this clutch concept. The disadvantages of a belt drive, such as low efficiency, high susceptibility to wear and inadequate running characteristics especially under rainy conditions on the one hand, and the necessity of variable-speed transmissions for the gradually increasing engine outputs on the other, motivated engineers to seek better alternatives to transmission clutches.

Transmission belt clutch on the patented Benz motor car from 1886

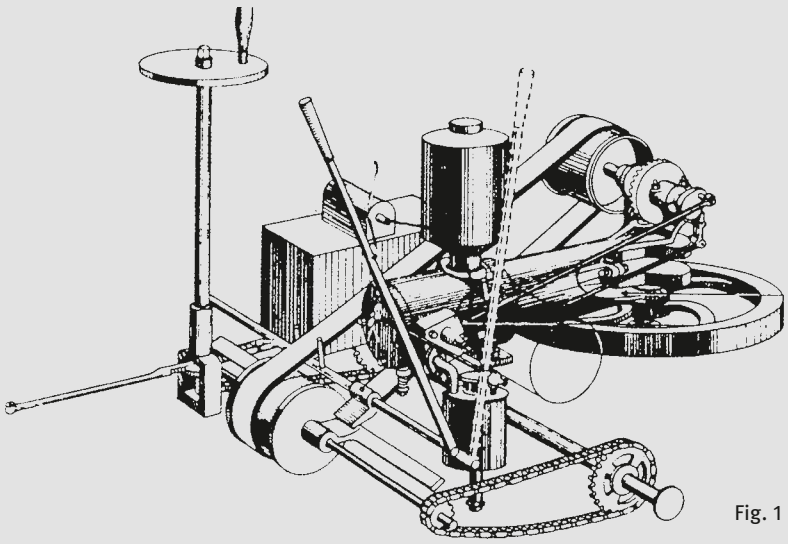

Fig. 1

The result was a broad range of clutch types, including the forerunners of our present day clutches – all based on the principle of the friction clutch. Here a disc located on the end of the crankshaft approaches a second, stationary disc to allow the discs to engage. When the two make contact, friction is produced and the non-driven disc is set in motion (Figure 2).

As the clamping pressure is increased, the driving disc carries along the driven disc with increasing speed until force transmission is reached, and both discs have the same peripheral speed. In the period up until the discs are fully engaged, the main driving energy is converted into heat as the discs slide across one another. This arrangement meets the two chief demands – gradual and gentle engagement so that the engine is not cut off and there are no jerks in the engine or power transmission during start-up, and loss-free power transmission when the clutch is engaged.

The basic form of this design principle was employed as early as 1889, in the steel wheel cars from Daimler, which had a cone/bevel friction clutch (Figures 3 and 4). A free moving frictional cone, located on the engine driving shaft and connected to the clutch shaft via the clutch cover, engages in the conically machined out flywheel. A spring presses the cone into the flywheel recess so that pressure on the foot pedal pulls the cone back against the spring pressure via the free-moving clutch release sleeve. This interrupts the power flow.

Basic principle of the friction clutch

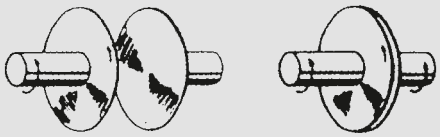

Fig. 2

The driven disc is pushed onto the driving side until force transmission is attained

Design of the cone/bevel friction clutch dominant throughout the 1920s

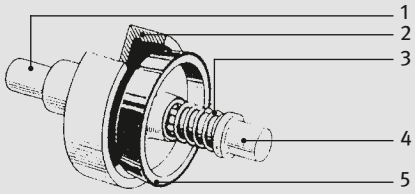

Fig. 3

1 From the engine
2 Engine flywheel with hollow cone
3 Coil spring
4 To the transmission
5 Driver cone with leather lining

Cross section of a tapered clutch showing the typical components: tapered clutch cone and correspondingly machined flywheel

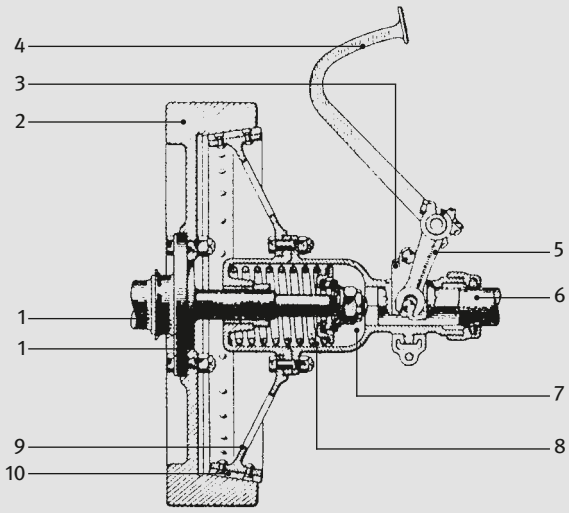

Fig. 4

1 Crankshaft flange
2 Flywheel
3 Release sleeve
4 Clutch pedal
5 Release lever
6 Clutch shaft
7 Clutch cover
8 Clutch spring
9 Tapered clutch cone
10 Clutch lining

Camel hair belts originally functioned as friction linings on the cone surface. But these were soon replaced by leather belts, which were soaked in castor oil to protect against moisture, grease and oil (Figure 5).

However, the advantages – self adjustment, no strain on the drive or transmission shaft – were outweighed by the disadvantages. The friction lining wore out fast and replacement was complicated. So, the car makers switched to designs with spring-loaded pins or leaf springs under the leather lining. Another drawback was that the flywheel and tapered clutch cone were very large, and so, owing to its high mass moment of inertia, the clutch part came to rest much more slowly than was required after the release for gear changing. This was because the transmission had not yet been synchronized.

To remedy this problem, from around 1910 onwards an additional clutch brake or transmission brake was installed which had to be actuated via a second foot pedal – usually in conjunction with the clutch pedal and located together with the latter on a common pedal shaft. The habit of many drivers of allowing the clutch to slip instead of changing gear to control the vehicle speed heated the flywheel more than it did the friction cone, which was thermally insulated by the leather lining. After a spell of rugged driving, the cone was prone to engaging more deeply in the flywheel as it had been expanded by the heat, leaving it jammed tight when it cooled down (Figure 5). By the end of the First World War, metallic friction linings were becoming increasingly popular.

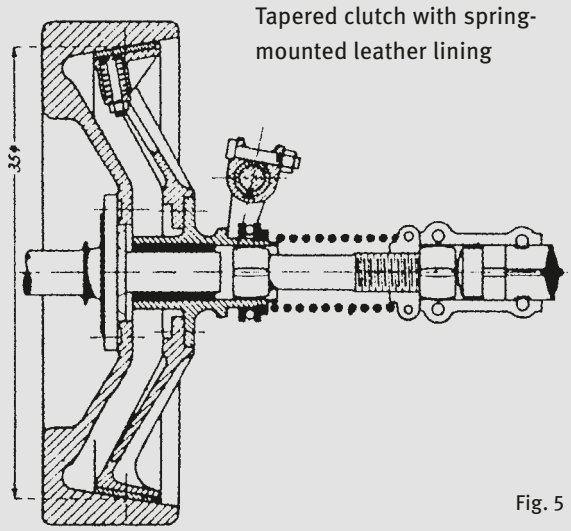

Tapered clutch with spring-mounted leather lining

Fig. 5

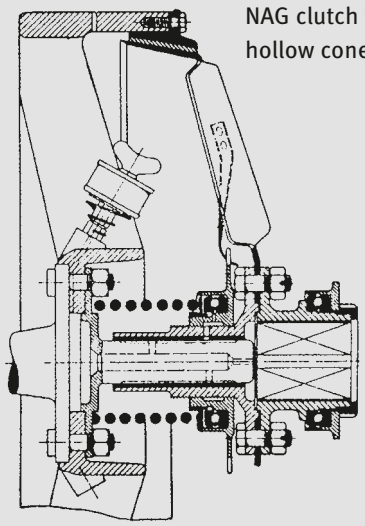

NAG clutch with two-part hollow cone ring

Fig. 6

Alongside this, experiments had been conducted with other solutions: For example, ‘Neue Automobil-Gesellschaft (NAG)’ designed a clutch (Figure 6) containing a camel hair lined cone, stamped from sheet metal and equipped with fan type blades for cooling, which engaged in a two-part, leather-lined ring screwed into the flywheel. The two-part construction allowed the ring to be easily removed, simplifying maintenance and reducing the frequency of jamming.

1 Engine
2 Clutch
3 Clutch pedal
4 Variable-speed transmission
5 Universal joint
6 Universal shaft
7 Rear left wheel
8 Universal shaft tube
9 Spring
10 Ring gear
11 Left rear axle shaft
12 Rear axle housing
13 Differential
14 Right rear axle shaft
15 Drive pinion
16 Rear axle differential
17 Torque ball for absorbing rear axle thrust and transferring it to chassis frame
18 Chassis frame
19 Right rear wheel

Daimler-Motoren-Gesellschaft developed an open friction clutch with a bare aluminum cone (Figure 8). For a soft release, oil had to be dripped onto the frictional surfaces at regular intervals. Cone clutches continued to dominate throughout the 1920s thanks to their simplicity. Metallic clutches with cylindrical friction surfaces did not win acceptance due to their poor modulation characteristics. Only the spring band clutch, a derivative of the cylindrical clutch that had been installed in Mercedes cars by Daimler since the turn of the century, was able to persevere until the First World War thanks to its ingenious design. In the spring band clutch, a sturdy, spiral-shaped spring band, which received the drum-shaped end of the transmission shaft, was fitted in a recess of the flywheel. One end of the spiral spring was connected to the flywheel, while the other was fastened to the cover of the spring housing. The actuation of the clutch pedal tensioned the spring band, which then coiled itself (self-reinforcing) more and more firmly around the drum, driving the transmission shaft – and engaging the clutch. The compression of the springs required only slight force and ensured a gentle engagement of the clutch (Figure 9).

Powertrain with tapered clutch

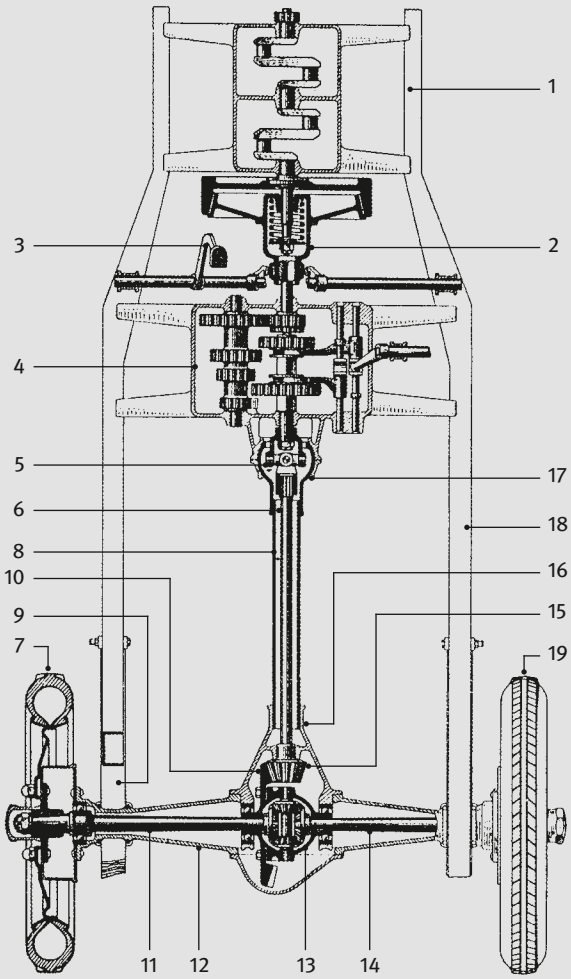

Fig. 7

The clutch is actuated via the foot pedal, which pulls the driver cone back against the spring force via a release lever, thus disengaging the clutch

Cone clutch with aluminum cone*

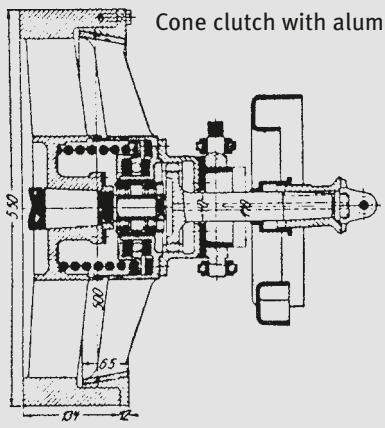

Fig. 8

Spring band clutch*

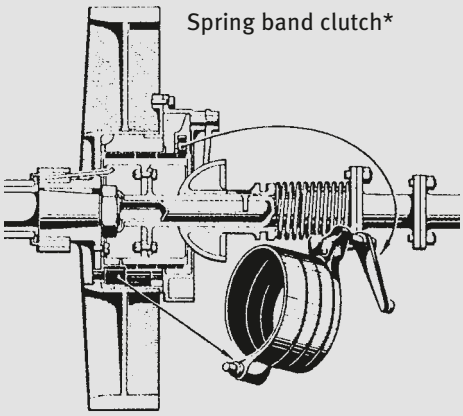

Fig. 9

Owing to its ingeniously simple design, this spring band clutch was built up until the First World War

* Daimler-Motoren-Gesellschaft

At about the same time that Daimler-Motoren-Gesellschaft was developing its spring band clutch, Professor Hele-Shaw from England was already experimenting with a multi plate or multiple disc clutch. This can be regarded as the forerunner of today's conventional dry single-disc clutch. Multi-disc clutches, named 'Weston clutches' after the first large-scale producer, had a decisive advantage over the cone friction clutch: much larger friction surfaces with a lower space requirement and constant engagement (Figure 10).

In the case of the multi-disc clutch, the flywheel is connected to a drum-shaped housing that has grooves on the inside corresponding to the shape of the outer edge of the plate, allowing it to turn with the crankshaft or flywheel and at the same time to move longitudinally. An identical number of discs with matching inner recesses are centered on a hub connected to the clutch shaft. These discs can move on the hub in the longitudinal direction of the clutch shaft. During installation, inner and outer clutch discs are alternately combined to form a disc packet, so that a driving and driven disc always follow one another. The disc pairs thus formed, originally with a bronze disc always turning against a steel one, were pressed together by a thrust washer under the force of a clutch spring. All clutch discs were thus constantly engaged. This gradual increase of frictional power enabled the multi-disc clutch to engage very gently. As the spring pressure eased off, the discs disengaged again, in part supported by the spring-mounted strips bent out from the plane of the disc. By varying the number of disc pairs, a basic clutch type could be adjusted to each engine output. Multi-disc clutches operated either immersed in oil/petroleum or dry, in which case, however, special riveted friction linings were used (Figure 11).

Multi plate or multiple disc clutch

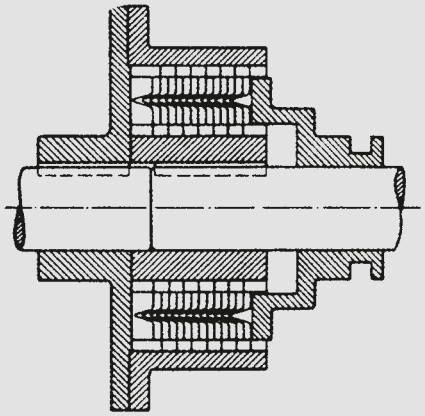

Fig. 10

Professor Hele-Shaw from England was the first to experiment with multi-disc multiple disc clutches

Plate pair from a multi-disc clutch

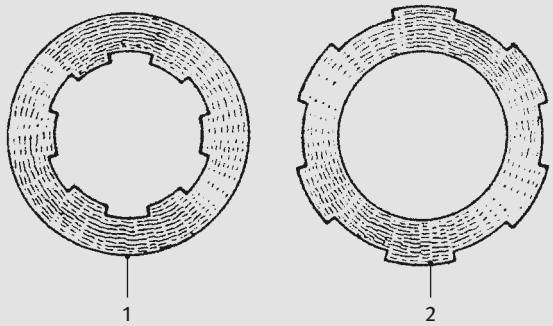

Fig. 11

1 Inner clutch disc
2 Outer clutch disc

Multiple disc clutch in an oil bath

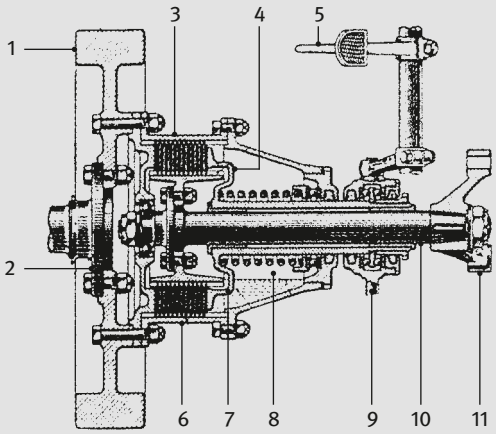

Fig. 12

1 Flywheel
2 Crankshaft flange
3 Clutch cover
4 Clutch hub
5 Clutch pedal
6 Clutch discs
7 Thrust washer
8 Clutch spring
9 Release sleeve
10 Clutch shaft
11 Rod end bearing

The greatest drawback of the multi-disc clutch was certainly the drag effect, especially in the oil bath. This allowed only partial disengagement, thus making gear changing difficult (Figures 12 and 13).

Dry multiple disc clutch with riveted lining

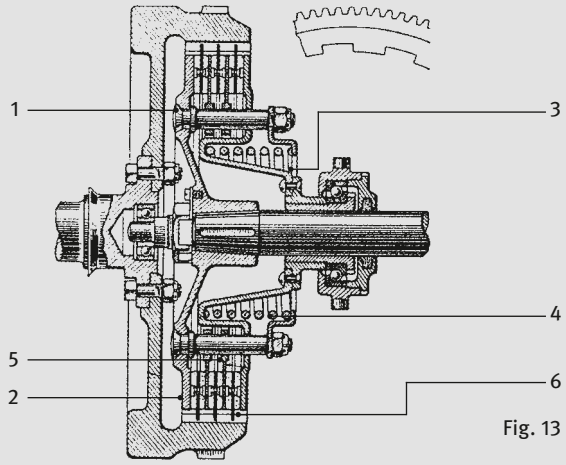

Fig. 13

1 Guide pin
2 Driving disc for clutch shaft
3 Thrust plate with release sleeve
4 Clutch spring
5 Inner clutch discs
6 Outer clutch discs with clutch lining

By 1904, De Dion & Bouton had introduced the single-disc clutch principle (Figure 14). However, due to the initially inadequate materials, this only came into widespread use in the US during the 1920s – largely on demand from the supply industry, who towards the end of that decade granted licenses to European manufacturers. Within a few years, the single-disc had superseded cone and multi-disc clutches. While De Dion & Bouton still lubricated the friction surfaces of their multi-disc clutches with graphite, clutch technology was greatly advanced with the advent of Ferodo-asbestos linings, which were used from about 1920 to the present day, only being replaced by asbestos-free linings late in the 20th century.

The advantages of the dry single-disc clutch were clear: the low mass of the clutch disc allowed it to come to rest more quickly when released, making changing gear much easier. The initial design of the dry single-disc clutch was relatively complicated. The clutch housing was flanged onto the flywheel, and the clutch cover screwed into the housing. This cover held lug levers that were pressed inwards by springs and which transmitted pressure from an intermediate disc via the friction plate and hence the force transmission from the flywheel.

Single-disc clutch*

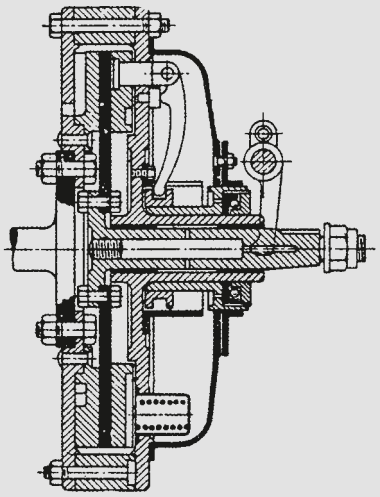

Fig. 14

* According to the findings of De Dion & Bouton

The friction disc was connected to the connecting or transmission shaft by a driver. The clutch was engaged and disengaged by a slip-ring disc that moved a cone back and forth. The sides of the cone accordingly actuated the lug levers under spring pressure, which loaded or released, i.e. engaged/disengaged, the intermediate disc. As the cone rotated about the slip-ring disc at rest, lubrication was required at regular intervals.

The coil spring clutch, in which the clamping pressure is produced by coil springs, proved successful, however (Figure 15). At first, experiments were carried out with centrally arranged springs. However, only the version with several smaller coil or clutch springs distributed along the outer edge of the clutch housing went into large-scale production (Figure 16).

The levers compress the coil springs via a release sleeve that moves freely on the clutch shaft, releasing the pressure plate and thus disengaging. The clamp load could be varied by using different spring assemblies but this had the crucial disadvantage that, as the engine speed increased, the coil springs located outside on the pressure plate were pressed further outwards against the spring pots by centrifugal force. The friction arising between the spring and the pot then caused the pressure characteristics to change. As the engine speed increased, the clutch became progressively heavier. In addition to this, the bearings for the release levers were constantly under load, making them susceptible to wear, and the spring pots quickly wore through, particularly when changing gear at high engine speeds (Figures 17 and 18). To overcome these systematic drawbacks, the diaphragm spring clutch (Figure 19) was developed, created in the research laboratories of General Motors in 1936 with mass production starting in the US in the late 1930s. In Europe, it became particularly familiar in the form of the American GMC military trucks used after the Second World War, and by the mid-1950s it began to be used by European manufacturers. The Porsche 356, the Goggomobil, the BMW 700 and DKW Munga were the first German-made vehicles to be equipped with this clutch. The clutch went into mass production in 1965 when it was fitted to the Opel Rekord.

As the diaphragm spring clutch is rotationally symmetric and therefore not sensitive to speed, its hour of triumph occurred in the 1960s, when high-speed engines with overhead camshafts (Glas, BMW, Alfa Romeo) largely superseded the push-rod designs. By the end of the 1960s, nearly all manufacturers had moved over to diaphragm spring clutches. Here LuK played a pivotal role in making the diaphragm spring clutch ready for high-volume production.

The replacement of the complete lever/coil spring system by a diaphragm spring that assumed both functions brought many advantages. The simple mechanical construction, constant clamp loads, the smaller space required for relatively high clamping pressures – very important with transversely installed engines – and high speed strength led to the diaphragm spring clutch being almost the only type used, and it is also being increasingly used in utility vehicles – long since a domain of coil spring clutches.

First design of the coil spring clutch with clutch springs arranged perpendicular to the center axle

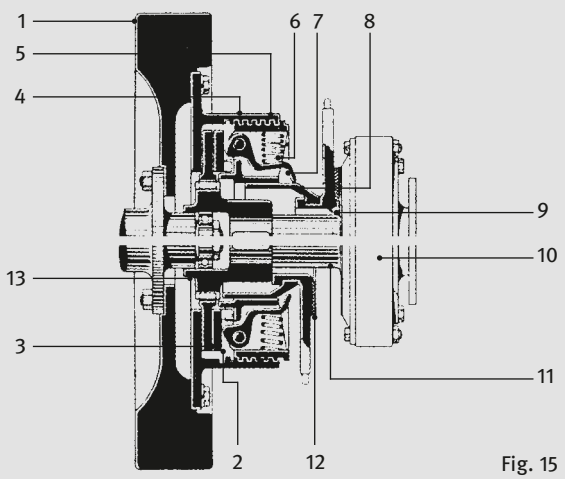

Fig. 15

1 Flywheel
2 Intermediate disc
3 Friction disc
4 Clutch cover
5 Clutch cover
6 Spring
7 Lug lever
8 Ball
9 Slip-ring disc
10 Spring joint
11 Connecting shaft
12 Leather lining
13 Driver

This form of coil spring clutch, with the clutch springs arranged parallel to the central axis, predominated through the 1960s.

Coil spring clutch

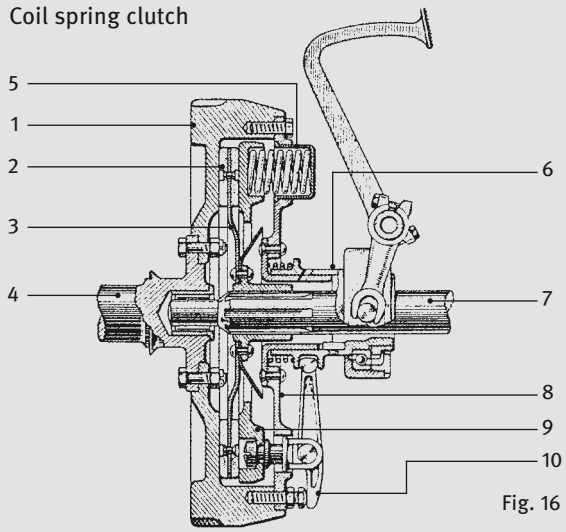

Fig. 16

1 Flywheel
2 Clutch lining
3 Clutch disc
4 Crankshaft
5 Clutch springs
6 Release sleeve
7 Clutch shaft
8 Clutch cover
9 Thrust washer
10 Operating lever

In Britain and the US, the Borg & Beck clutch model with springs located under the clutch basket was the most popular.

Borg & Beck model

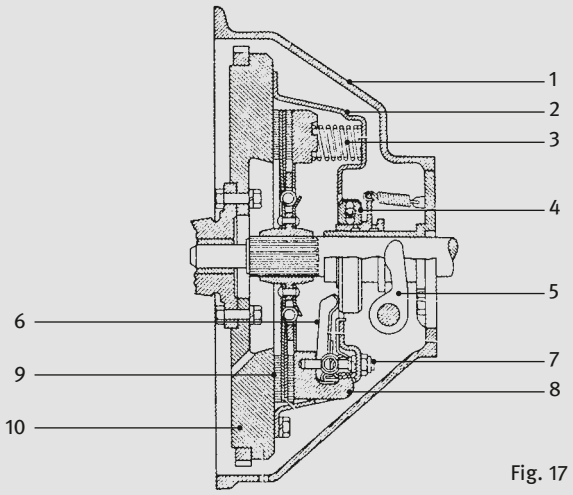

Fig. 17

1 Clutch cover
2 Clutch basket (clutch cover)
3 Clutch pressure spring
4 Release bearing (permanently lubricated)
5 Clutch fork
6 Release lever
7 Adjustment nut
8 Pressure plate
9 Driving disc (spring-mounted and damped)
10 Flywheel

On the European continent, the version with springs externally located above the clutch cover prevailed.

Clutch with external springs

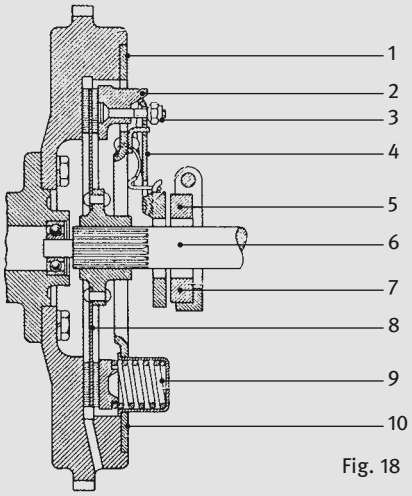

Fig. 18

1 Flywheel
2 Thrust plate
3 Adjustment nut
4 Release lever
5 Release ring
6 Clutch shaft
7 Release bearing with graphite ring
8 Driving disc
9 Clutch pressure spring
10 Clutch cover

Parallel to this development, the clutch disc was optimized. The continually changing speed and fluctuating torque of an internal combustion engine produce vibrations that are transmitted from the crankshaft, clutch and transmission input shaft to the transmission. Noise and severe tooth profile wear are the result. The lower flywheel mass and lightweight construction in modern vehicles amplify these effects. For this reason, clutch discs were provided with torsional dampers and cushion deflection.

For a long time clutch operation required strong legs, as pedal loads had to be transmitted via the linkage and shafts, however comfort was improved in the 1930s with the use of control cables, and in the 1950s with the use of hydraulic actuation.

Easier operation was also promoted by various attempts to automate the clutch process. In 1918, Wolseley had the first idea of an electromagnetic clutch. In the early 1930s, the French firm Cotal built a preselector transmission with an electromagnetic clutch, which was used in luxury cars.

Best known were the centrifugal force clutch, which regulated its clamping pressure by the centrifugal force, and automatic clutches such as Saxomat (Fichtel & Sachs), LuKomat (LuK), Manumatik (Borg & Beck) and Ferlec (Ferodo) – none of which of these was successful. The competition from manual and automatic transmissions with torque converters was too great.

Multi-disc clutch by Chevrolet*

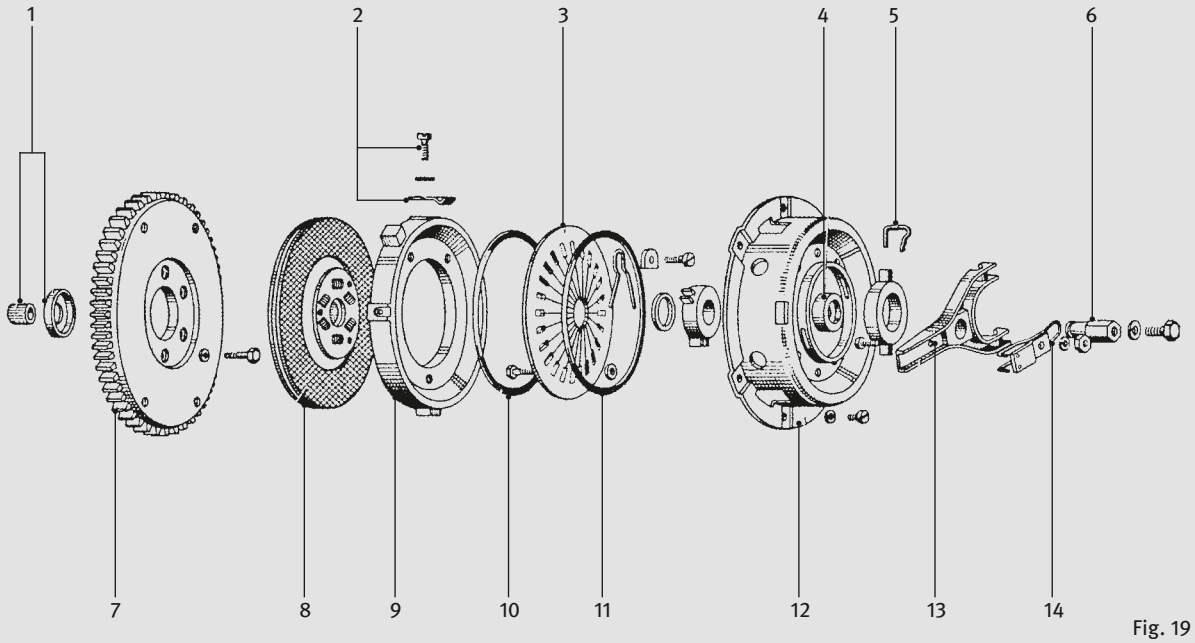

Fig. 19

With the multi-disc clutch developed by Chevrolet, the coil springs were replaced by a diaphragm spring. This clutch type is therefore also known as the Chevrolet or inboard clutch

1 Front guiding bearing of the clutch shaft
2 Retaining spring with screw
3 Disc or diaphragm spring with Finger-shaped release discs
4 Release bearing
5 Retaining spring
6 Ball pin for mounting the clutch fork
7 Flywheel
8 Driving disc
9 Thrust plate
10 Inner guiding ring
11 Outer guiding ring
12 Clutch basket
13 Clutch fork
14 Return spring of release fork

* With the kind approval of "Markt" magazine for classic cars and motorcycles

2 Clutch system

2.1 Functional diagram

Internal combustion engines only provide useful output within a certain speed range. To be able to use this range for various driving conditions, vehicles must have a transmission. Today, the transmission is generally connected to the engine via a 'dry single-disc clutch'. Dry twin-disc clutches are used whenever extremely high engine torques are transmitted at low actuation forces – mainly in sports cars and heavy-duty commercial vehicles. Unlike 'dry' clutches (i.e. clutches operating with air as the cooling medium), wet clutches operate immersed in oil or oil mist. They are typically used as multi-disc clutches in automatic transmissions, building machinery, special vehicles and in most motorcycles.

A clutch must satisfy the following requirements:

- Transmit engine torque
- Isolate and connect the power flow between engine and transmission
- Allow fast gear shifting
- Enable soft starting
- Dampen vibrations
- Serve as overload protection
- Remain maintenance-free over the entire service life
- Operate without wear
- Be easy to replace

Dry single-disc clutch

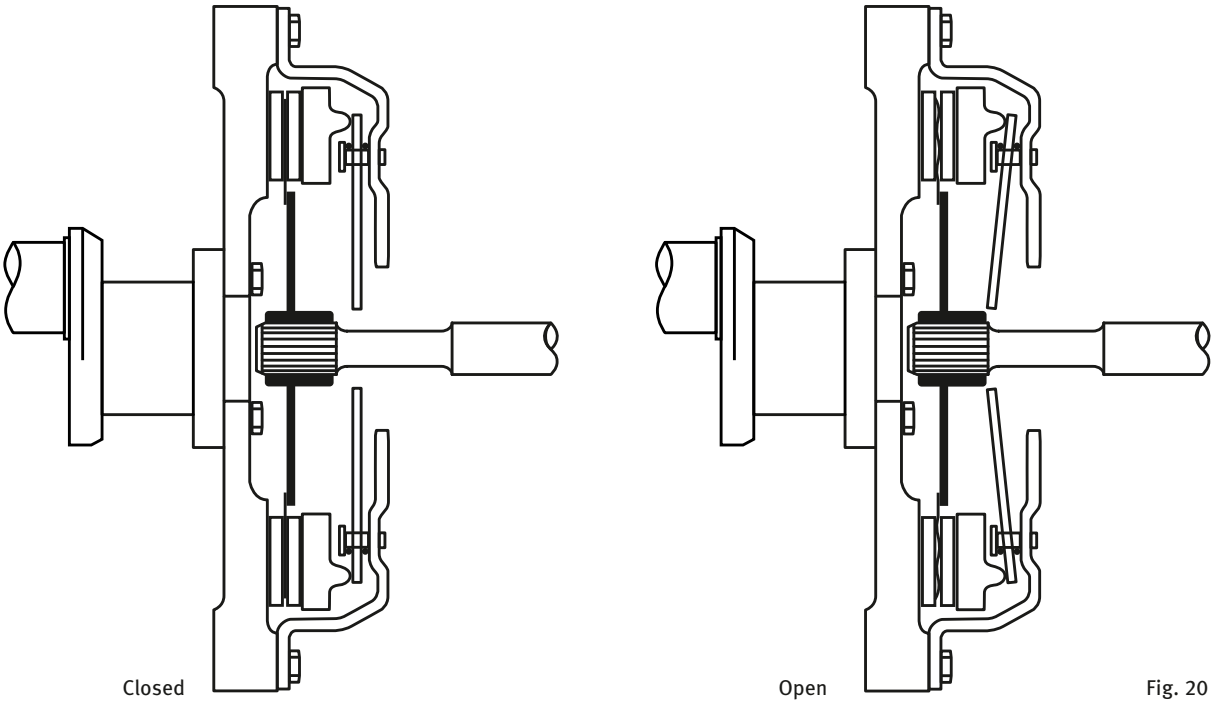

Fig. 20

2.2 Calculating the transmittable torque

One of the primary tasks of a clutch is to transmit the engine torque to the transmission input shaft. The transmittable torque of a clutch is calculated using the formula below:

$$M_d = r_m \cdot n \cdot \mu \cdot F_a$$

Where:

M_d transmittable torque
r_m mean friction radius of the clutch lining
n number of friction surfaces
μ frictional coefficient of the linings
F_a clamp load of the diaphragm spring

Example:

Lining inside diameter d^i = 134 mm
Lining outside diameter d_a = 190 mm
Clamp load F_a = 3,500 N
Frictional coefficient μ = 0.27 – 0.32 (organic linings)
0.36 – 0.40 (inorganic linings)

Calculation of r_m

$$r_m = \frac{d_i + d_a}{4}$$

$$r_m = \frac{134\ \text{mm} + 190\ \text{mm}}{4}$$

$$r_m = 81\ \text{mm}$$

For the next calculation, the result is shown in meters.

$$81\ \text{mm} = 0.081\ \text{m}$$

$$M_d = 0.081\ \text{m} \times 2 \times 0.27 \times 3{,}500\ \text{N}$$

$$M_d = 153\ \text{Nm}$$

Clutches are essentially designed with a safety factor. As a result, the transmittable torque is always greater than the maximum engine torque.

Depiction of the calculation parameters

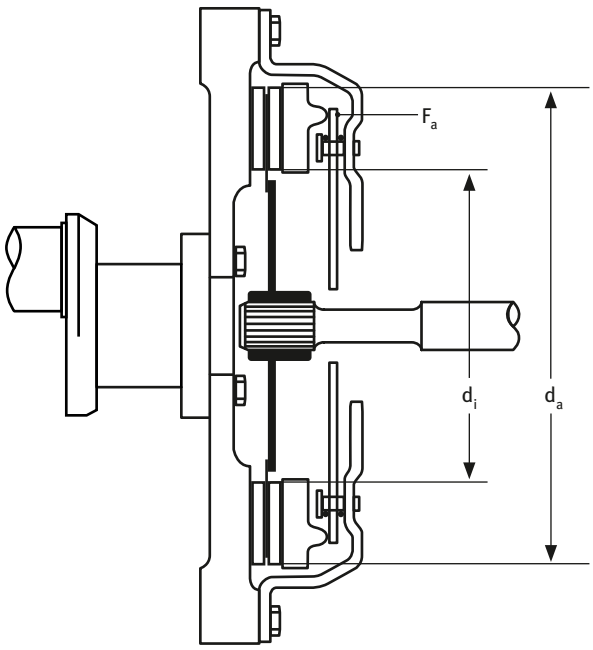

Fig. 21

2.3 Structure

In the clutch cover, diaphragm springs, spacer bolts, support rings, tangential leaf springs and the pressure plate form a mechanism that permits a friction lock-up connection that can be modulated. The diaphragm spring generates the clamp load and forms the lever between release bearing and pressure plate. Support rings guided via spacer bolts act as the support point. The pressure plate is centrally guided by several tangential leaf springs in the clutch cover. Power is transmitted by the clutch disc with the clutch linings. The clutch disc creates a friction lock-up connection with the engine via the linings, and a form-fit connection with the transmission input shaft through the hub.

1 Tangential leaf spring
2 Clutch housing/clutch cover
3 Pressure plate
4 Support ring (also pivot ring)
5 Diaphragm spring
6 Torsional damper
7 Hub
8 Guiding sleeve
9 Transmission input shaft
10 Release bearing
11 Pilot bearing (also guiding bearing)
12 Clutch disc
13 Spacer bolts
14 Segments for cushion deflection
15 Friction lining
16 Flywheel

Dry single-disc clutch (closed), components

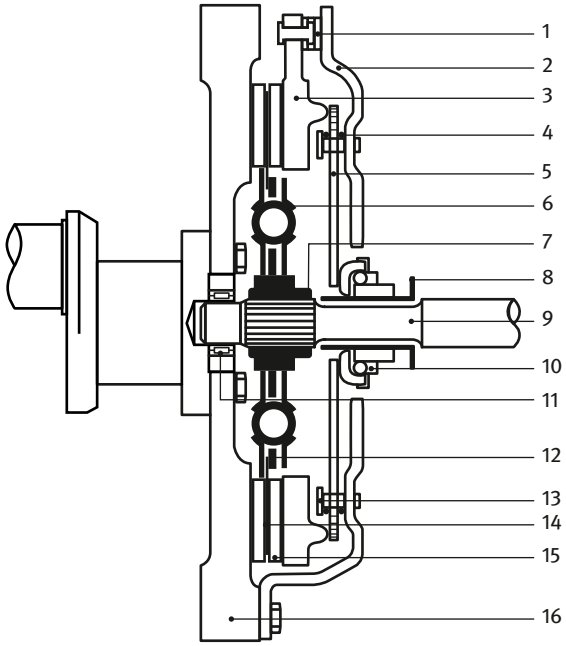

Fig. 22

2.4 Function

Clutch closed (Figure 22)
In the engaged state, the force of the diaphragm spring acts on the pressure plate. This pushes the axially movable clutch disc against the flywheel. A friction lock-up connection is created. This allows the engine torque to be directed via the flywheel and the pressure plate to the transmission input shaft.

Clutch open (Figure 23)
When the clutch pedal is pressed, the release bearing is moved against the diaphragm spring load in the direction of the engine. At the same time, the diaphragm springs are deflected over the support rings, and the force on the pressure plate is reduced. This force is now so low that the tangential leaf springs are able to move the pressure plate against the diaphragm spring load. This creates play between the friction surfaces, allowing the clutch disc to move freely between the flywheel and the pressure plate. As a result, the power flow between the engine and transmission is interrupted.

Dry single-disc clutch (open)

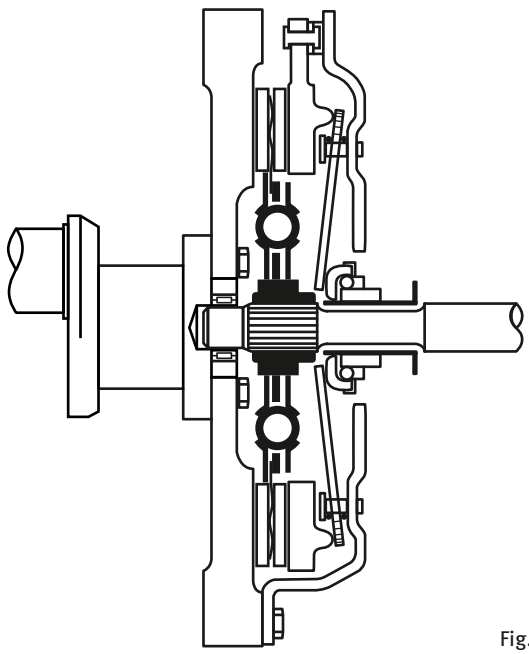

Fig. 23

3 Clutch cover

3.1 Tasks

The clutch cover together with the flywheel and clutch disc form a friction system. It is connected to the flywheel and induces the transmission of the engine torque via the clutch disc to the transmission input shaft.

The diaphragm spring

The core component of the clutch cover is the diaphragm spring. Unlike the coil springs used in earlier PC clutches, it has the advantage that it can have a much flatter and lighter design. Especially important is the characteristic curve of the diaphragm spring, which differs substantially from the linear characteristic curve of a coil spring. Precise modeling of the diaphragm spring's outside and inside diameters, its thickness, rise angle and material hardness allows a characteristic curve to be produced as shown by the continuous curve in the first diagram in Figure 24.

While the clamp load with a coil spring clutch decreases linearly as the lining thickness decreases as a result of wear, here it increases initially and then drops again. This force profile is perceptibly more comfortable than the version with coil springs. The clutch is designed to begin to slip before the wear limit of the lining is reached. The necessity of a clutch replacement is thus signaled in due time, so that further damage, e.g. by the scoring of the lining rivets, is avoided. Moreover, because of the diaphragm spring characteristic curve, the requisite pedal forces are lower than with coil spring clutches.

Figures 24 to 26 show some examples of clutch characteristic curves and force diagrams. They do not directly refer to the designs pictured above them, but apply generally. The vertical axes on the left represent the forces. The release travel and, in Figure 24, the release bearing travel are shown at the bottom on the horizontal axes. The lift of the pressure plate is clearly shown on the vertical axes on the right.

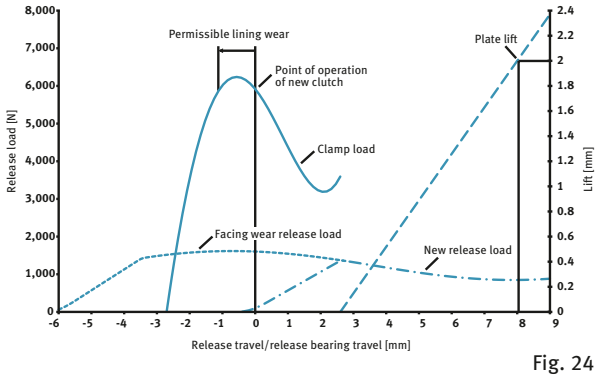

Fig. 24

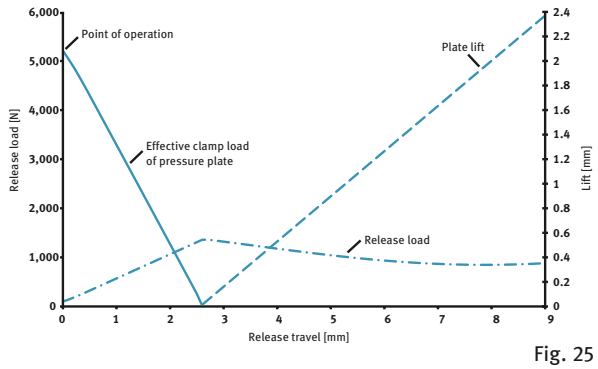

Fig. 25

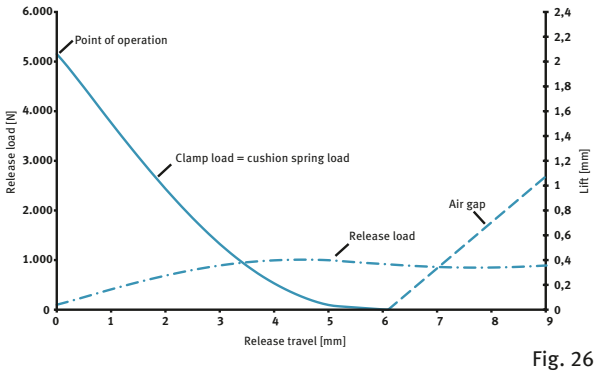

Fig. 26

3.2 Clutch characteristic curves and force diagrams

The solid line in Figure 24 shows the development of the clamp load. With a newly installed clutch disc, the position of maximum spring force of the diaphragm spring is exerted (point of operation of new clutch). As the lining thickness begins to decrease, the clamp load of the diaphragm spring first increases to the peak load, then gradually drops again to around the load level of the newly installed clutch when the lining is worn to the wear limit. The clutch disc thickness decreases by about 1.5 - 2.0 mm during its service life. The clamp loads are calculated in such a way that the clutch begins to slip shortly before the rivets of the clutch lining score the pressure plate or flywheel causing additional damage. The dashed/dotted line shows the development of the release load, i.e. the load required to actuate the clutch when the clutch is new and – shown by the dotted line – the load required after lining wear. The release load initially rises until the point of operation is reached, and then slowly drops again. The curve for the release load with lining wear has been moved to the left to illustrate more clearly the ratio of clamp load to release load. The higher clamp load at the point of operation with lining wear is reflected by a correspondingly higher release load. The dashed line shows the development of the pressure plate lift above the release bearing travel. The diagram clearly shows the lever ratio in the clutch: 8 mm release travel corresponds to 2 mm lift, i.e. to a transmission ratio of 4:1 (excluding the elasticities of the clutch). This also applies to the aforementioned ratio of clamp load to release load. In the center (Figure 25) and lower (Figure 26) diagrams, the measurements are compared for clutches including and excluding the cushion deflection of a clutch disc. The advantages of cushion deflection are a smoother clutch engagement and more favorable wear characteristics. Without cushion deflection, the effective clamp load (solid line) falls linearly and relatively sharply during disengagement. Conversely, it increases just as steeply and suddenly during clutch engagement. In the diagram on the right, however, we see that the available release travel along which the clamp load diminishes is around twice as great. On the other hand, as the clutch is engaged, the clamp load slowly increases along a curve, as the cushion springs must first be compressed. Thanks to the relatively gentle decline and/or increase in the clamp load curve (solid line), the pronounced peak in the required release load is reduced. As long as the pressure plate is still making contact with the clutch disc, the clamp load and cushion spring load are balanced in relation to each other.

3.3 Designs

Depending on the design and actuation system of a clutch, a distinction is drawn between:

Push-type diaphragm spring clutches
(Opened by pushing on the diaphragm spring tips)

Fig. 27

Pull-type diaphragm spring clutches
(Opened by pulling on the diaphragm spring tips)

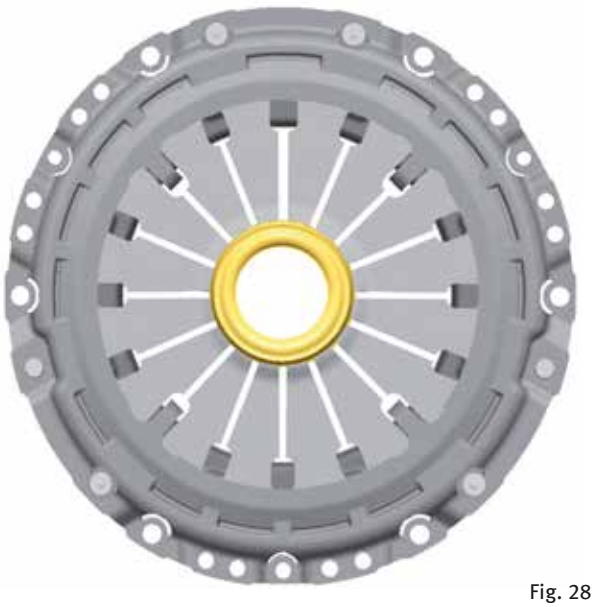

Fig. 28

3.3.1 Standard diaphragm spring clutch

With this design, the diaphragm spring is guided via distance bolts and support rings. The pressure plate is linked to the clutch cover via tangential leaf springs and lies on the outer edge of the diaphragm spring.

Tangential leaf springs perform three basic functions:

- Lifting the pressure plate during disengagement
- Transmitting the engine torque
- Centering the pressure plate

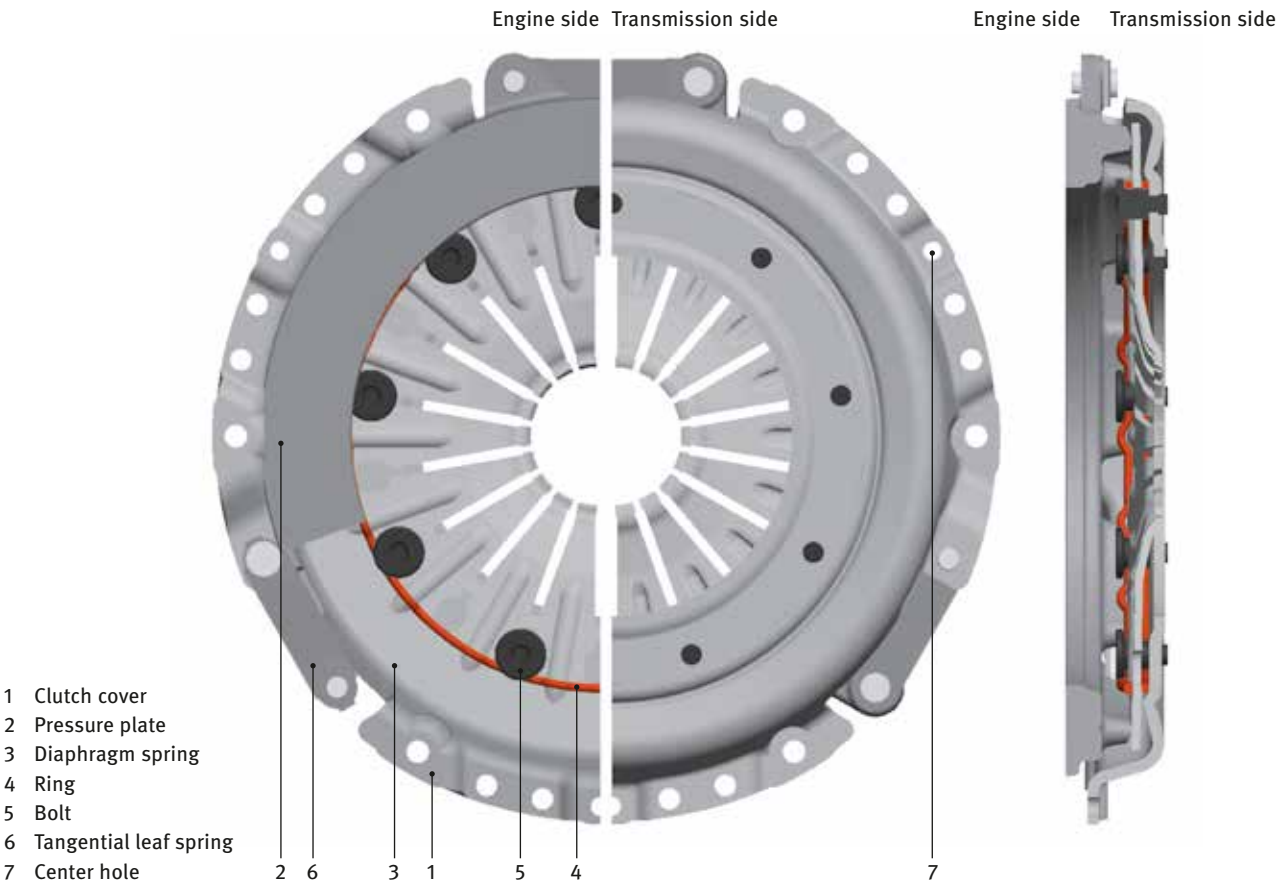

Fig. 29

The diaphragm spring is clamped between the pressure plate and the clutch cover in order to produce the clamp load required to clamp the clutch disc with friction lock-up between the flywheel and pressure plate. In doing so, it is supported by a ring, which is fixed by bolts, in the clutch cover. As an option, this ring can be replaced by a bead in the cover. The outside diameter of the diaphragm spring is seated on the pressure plate. If the clutch is actuated, the release bearing pushes onto the tips of the diaphragm spring fingers. The pressure plate lifts and the clutch disc is disengaged by means of the tangential leaf spring.

3.3.2 Diaphragm spring clutch with spring shackles

The diaphragm spring clutch with spring shackles is a further development of the standard design. The spring shackles are modeled in such a way that they pull the pins in the clutch cover outwards. This compensates for the wear in the bearing arrangement of the diaphragm spring. The advantage of this design is a uniform lift throughout the entire clutch life.

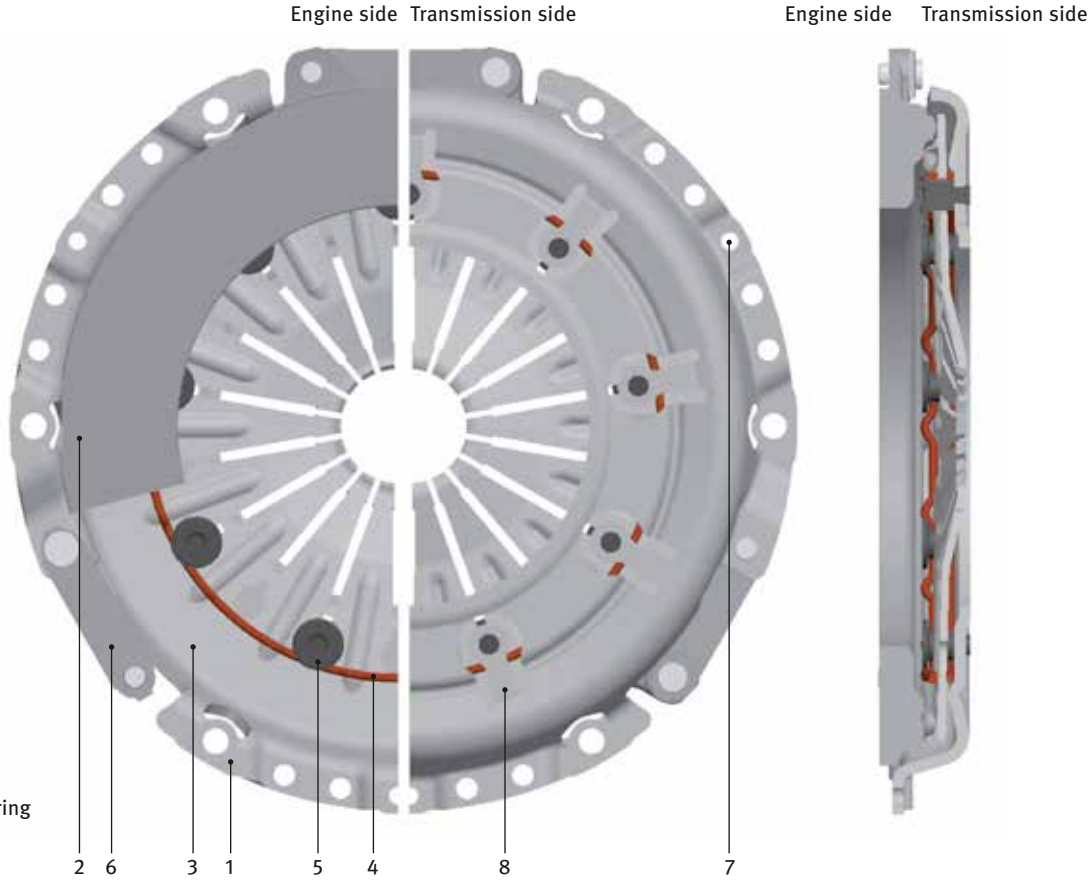

1 Clutch cover
2 Pressure plate
3 Diaphragm spring
4 Ring
5 Bolt
6 Tangential leaf spring
7 Center hole
8 Spring shackle

Fig. 30

3.3.3 Diaphragm spring clutch with support spring

The diaphragm spring clutch with a support spring is a special version. The diaphragm spring is supported against the cover by a ring, which can optionally be replaced by a bead in the clutch cover. The support spring serves as a mating bearing surface.

This design allows for clearance-free and loss-free mounting of the diaphragm spring with automatic wear adjustment. Otherwise, this type does not differ from those described above.

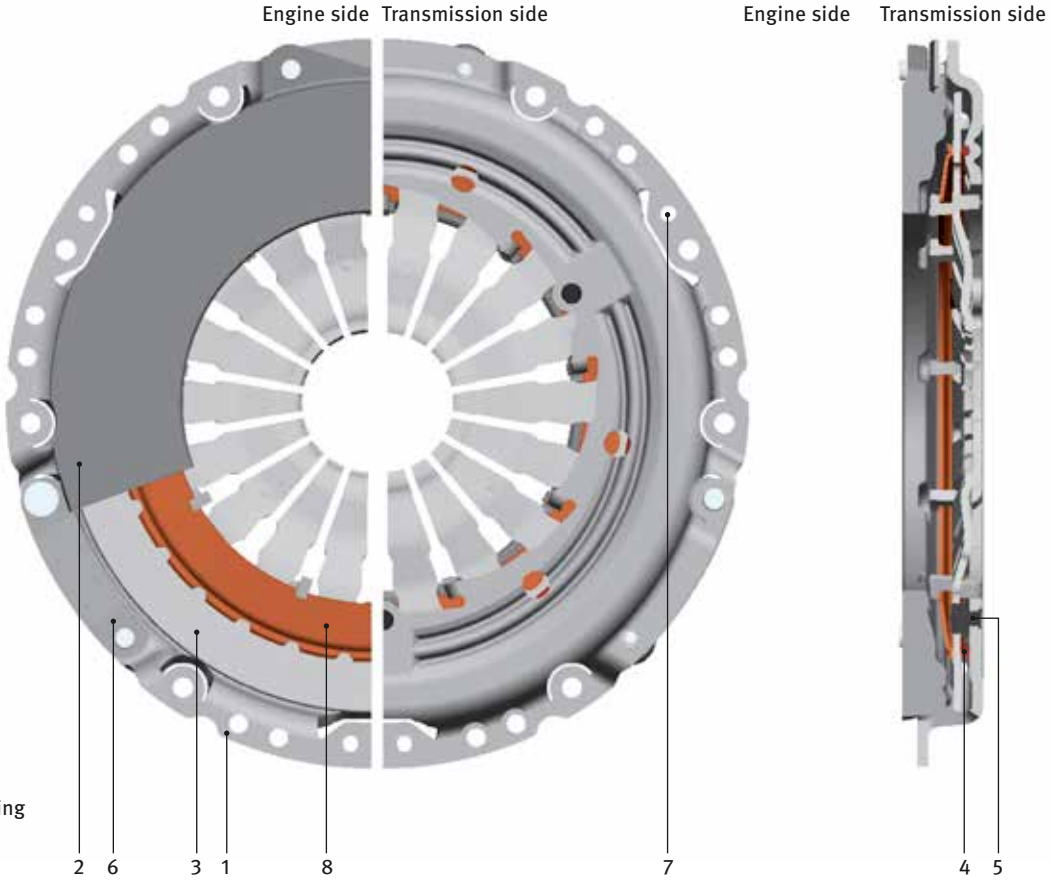

1 Clutch cover
2 Pressure plate
3 Diaphragm spring
4 Ring
5 Bolt
6 Tangential leaf spring
7 Center hole
8 Support spring

Fig. 31

3.3.4 Bolt-free diaphragm spring clutch

Another special type is the bolt-free diaphragm spring clutch. Similar to the design with support spring, the diaphragm spring is supported against the cover by a ring, which can optionally be replaced by a bead in the clutch cover. As with a pin clutch mechanism, a wire ring serves as the bearing mating surface. As a special feature, however, the ring is retained by shackles formed from the clutch cover. Similar in design to the spring shackle clutch, the shackles are again preloaded here in order to provide automatic compensation for the wear occurring at the diaphragm spring mount and to prevent clearance of the diaphragm spring mount throughout the entire clutch life.

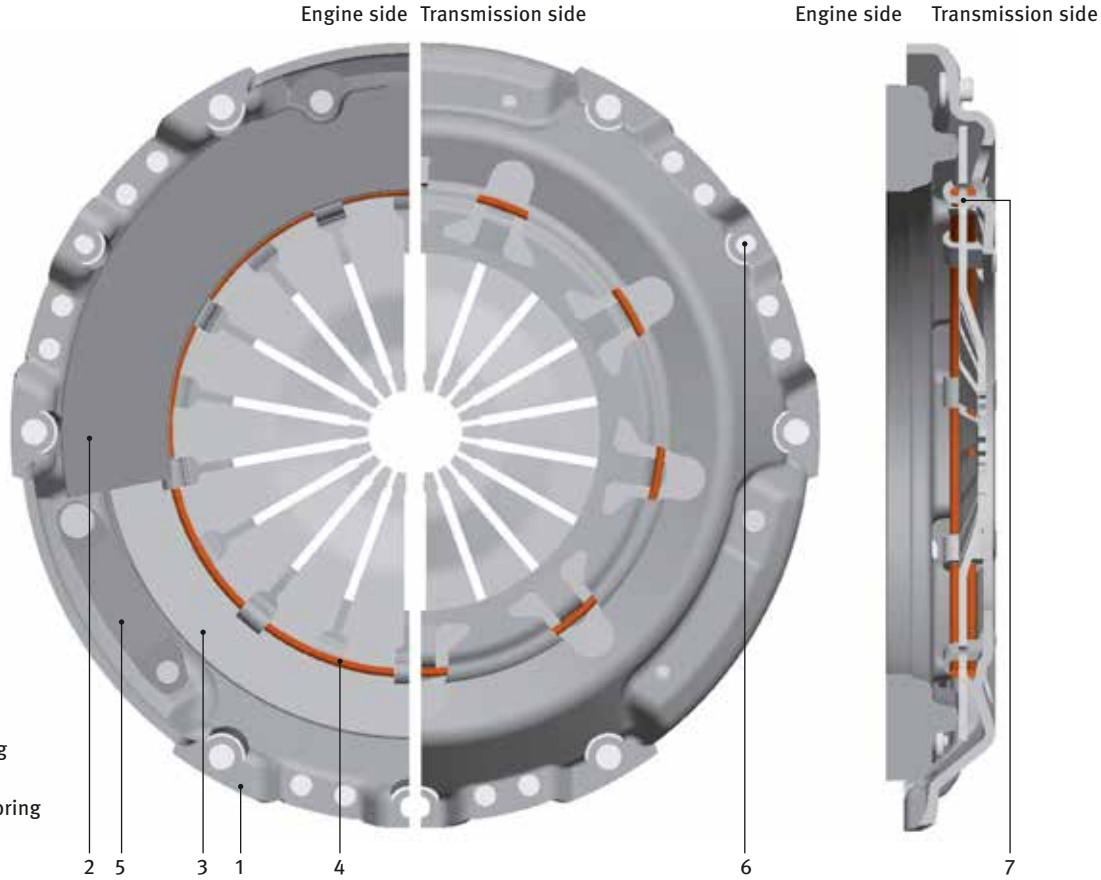

1 Clutch cover
2 Pressure plate
3 Diaphragm spring
4 Ring
5 Tangential leaf spring
6 Center hole
7 Shackles

Fig. 32

3.3.5 Pull-type diaphragm spring clutch

The diagram below shows a pull-type diaphragm spring clutch. Contrary to a push-type diaphragm spring clutch, this design is characterized by the reversed installation of the diaphragm spring. With this design, the clutch is actuated by pulling on the tips of the diaphragm spring clutch. The outer edge of the diaphragm spring is supported by the clutch cover and the inner edge by the pressure plate. The benefit of this design is the possibility, on the basis of the leverage ratio yields, of reducing release forces compared with a push-type diaphragm spring clutch – whilst requiring the same clamp load. In addition, pull-type clutches are more efficient than push-type diaphragm spring clutches because the diaphragm spring is supported at the outside diameter of the clutch cover. Unlike the push-type version, the pull-type clutch is more difficult to install and remove. This is partly due to the more complex design of the release bearing.

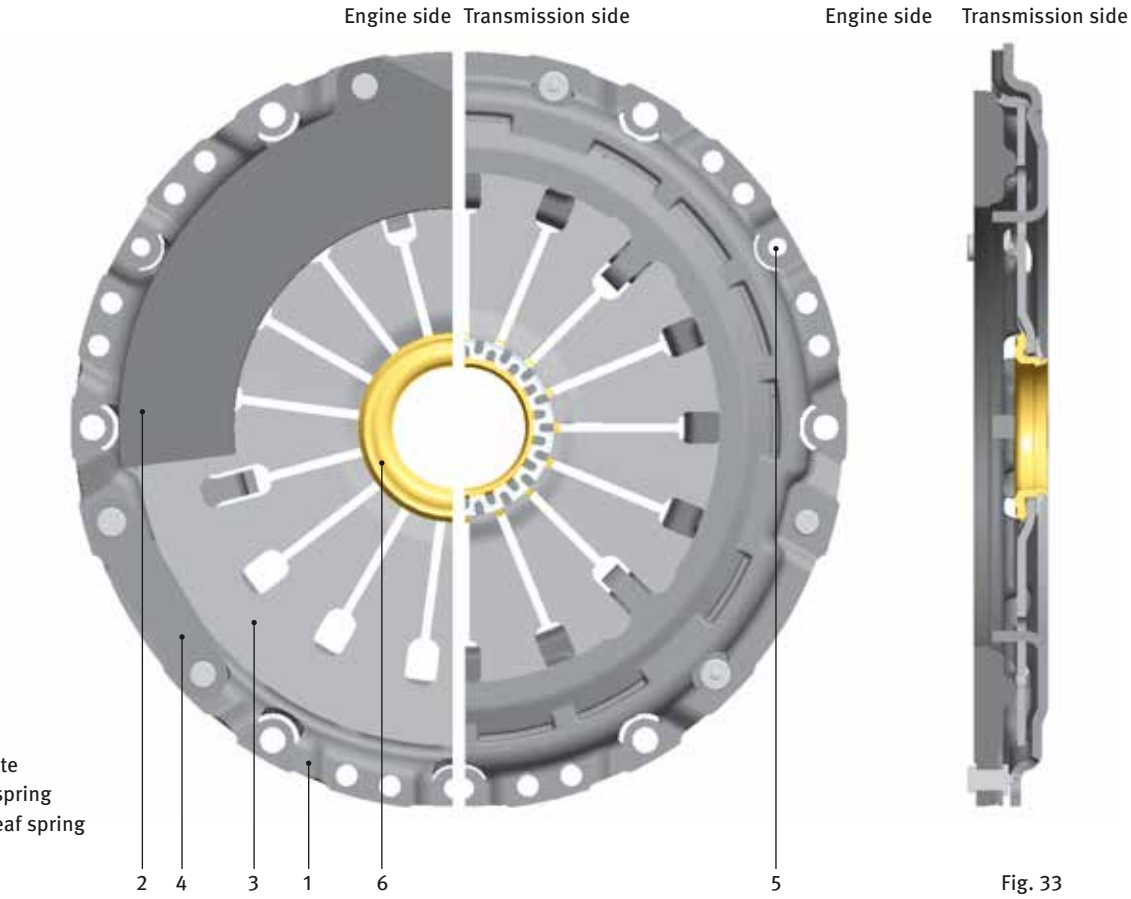

1 Clutch cover
2 Pressure plate
3 Diaphragm spring
4 Tangential leaf spring
5 Center hole
6 Thrust piece

Fig. 33

3.3.6 Self-adjusting diaphragm spring clutch SAC I (force controlled)

In recent years, the increase in torque in new engines has developed at a remarkable pace. This has inevitably led to clutch systems with increased clamp loads, which in turn results in higher actuation forces. The resulting compromise on comfort is effectively countered by the Self-Adjusting Clutch (SAC).

Operating principle of the SAC self-adjusting clutch
On a clutch with wear adjustment, a sensor detects the increased release load due to wear and correctly compensates for the reduction in lining thickness (wear compensation with force control). The key difference between this and a conventional clutch is that the (main) diaphragm spring is supported by a sensor diaphragm spring instead of being riveted to the cover. In contrast to the strongly regressive main diaphragm spring, the sensor diaphragm spring provides a sufficiently wide range of almost constant load. As soon as the amount of force rises slightly above the release load, the sensor diaphragm spring deforms. As long as the release load is smaller than the load of the sensor spring, the pivot point of the main diaphragm spring remains stationary when the clutch disengages. When lining wear increases, the release load increases, the counterforce of the sensor diaphragm spring is overcome and the pivot point moves toward the flywheel to a position where the release load again falls below the sensor load. When the sensor spring deflects, a gap develops between pivot point and cover, which can be compensated by a ramp ring.

Wear adjustment function
The force sensor with the thickness adjustment wedge can be realized in a simple and elegant manner with ramps that move towards each other. In comparison to a conventional clutch, the only additional parts required are a sensor diaphragm spring (red) and an adjuster ring (yellow). The sensor diaphragm spring is suspended in the cover and supports, together with its inside fingers, the main diaphragm spring. The ramps bring about the self-adjustment effect. Due to the centrifugal forces, they are arranged in a circumferential direction. The ramp ring runs on opposing ramps in the cover. It is preloaded in the circumferential direction via pressure springs that force the ring to fill the gap between the diaphragm spring mount and the cover when the sensor spring deflects.

Schematic representation of the SAC system

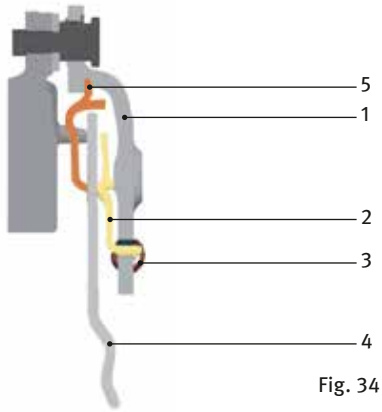

1 Clutch cover
2 Ramp ring
3 Pressure spring
4 Diaphragm spring
5 Sensor diaphragm spring

Fig. 34

Figure 35 shows the release load profiles for a conventional clutch with new and worn linings. In contrast, the characteristic curve of the much lower release load of the self-adjusting clutch (SAC) remains virtually unchanged over its service life. An additional advantage is the higher wear reserve, which no longer depends on the length of the diaphragm spring curve (as in conventional clutches), but rather on the ramp height, which can easily be increased to 3 mm for small and up to 10 mm for very large clutches. This represents a decisive step toward the development of clutches with longer service lifetimes.

Comparison of release loads of a conventional clutch with those of the SAC

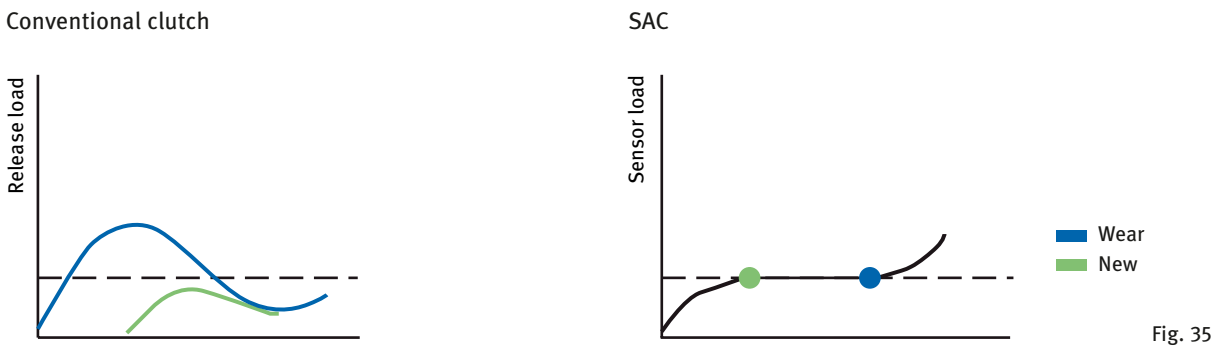

Fig. 35

The key features of this design compared to the previous versions are:

- Lower release loads remaining virtually constant over the clutch life
- This increases driving comfort over the entire life of the clutch
- Increased wear reserve and consequently extended service life thanks to automatic wear adjustment

This results in a number of advantages:

- No further need for servo systems (e.g. CSA, page 43)
- Simplified release systems
- Shorter pedal travel
- Constant pedal forces across the entire engine model range
- New ways of reducing the clutch diameter (torque transfer)
- Smaller release bearing working range throughout the service life

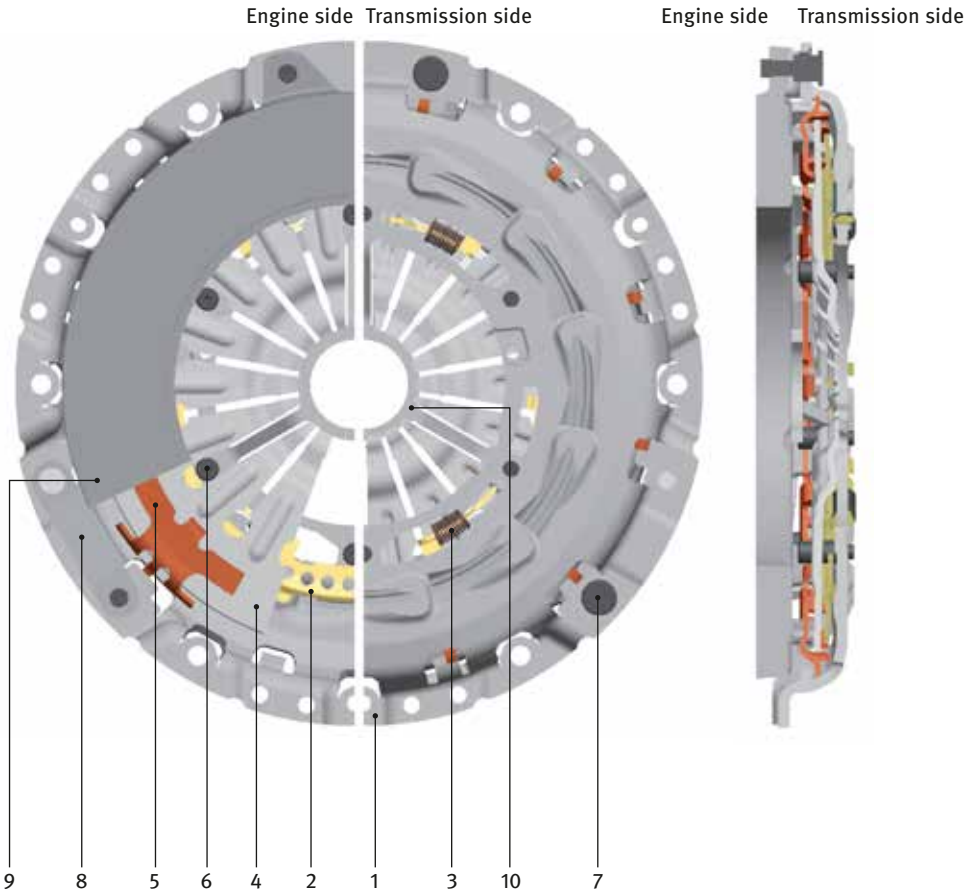

1 Clutch cover
2 Adjuster ring
3 Pressure spring
4 Diaphragm spring
5 Sensor diaphragm spring
6 Bolt
7 Bolt
8 Tangential leaf spring
9 Pressure plate
10 Cover stop

Fig. 36

3.3.7 Multiple-disc self-adjusting clutch (force controlled)

More powerful engines with torques › 500 Nm also require clutches with higher transmitted torques. This involves an almost inevitable increase in pedal forces despite the use of self-adjusting clutch systems.

A variety of technological approaches (e.g. improved release systems) helped to keep the increase within reasonable limits; however, calls for a clutch with reduced actuation forces grew louder.

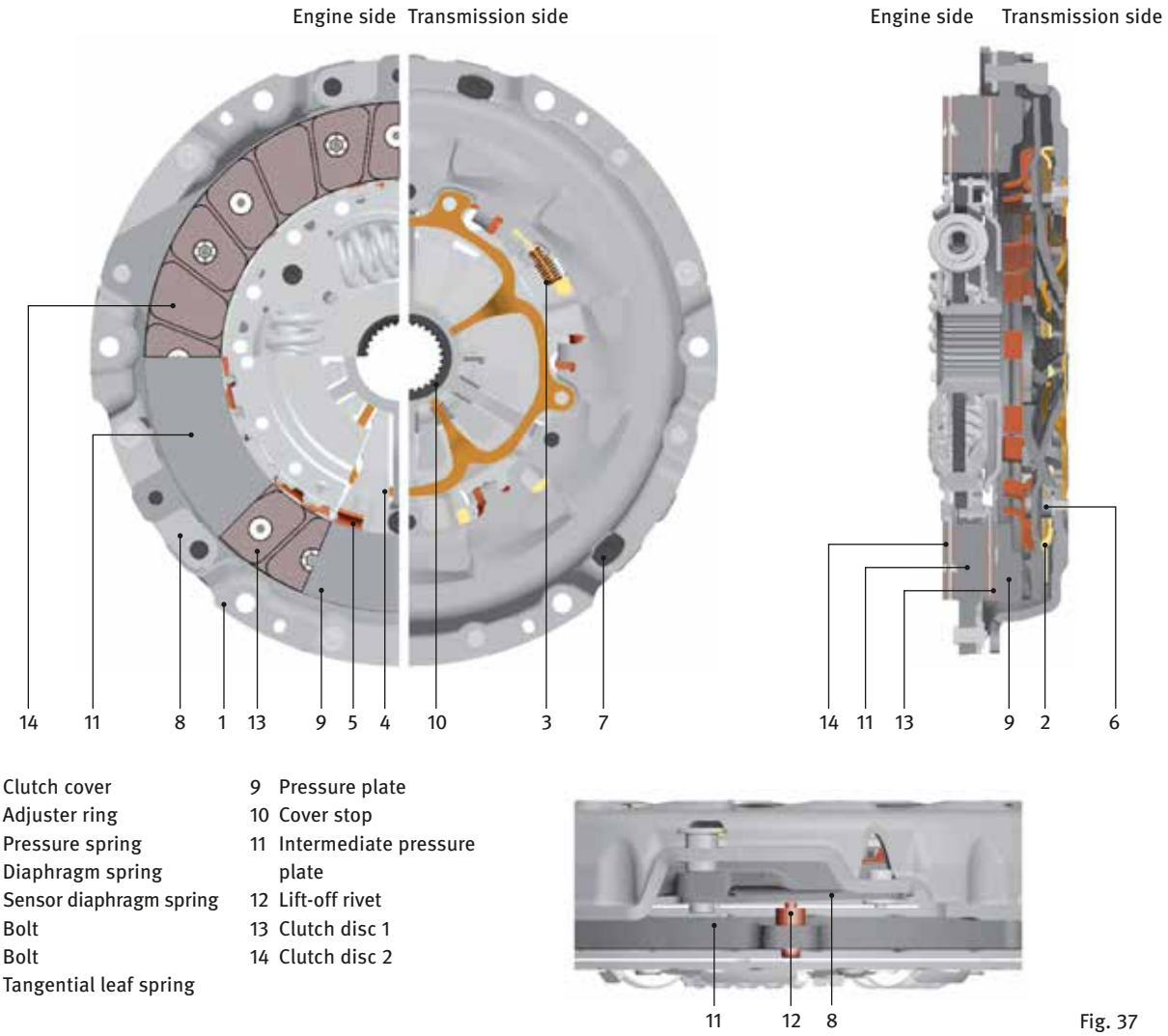

1 Clutch cover
2 Adjuster ring
3 Pressure spring
4 Diaphragm spring
5 Sensor diaphragm spring
6 Bolt
7 Bolt
8 Tangential leaf spring
9 Pressure plate
10 Cover stop
11 Intermediate pressure plate
12 Lift-off rivet
13 Clutch disc 1
14 Clutch disc 2

Fig. 37

Two clutch discs increase the transmittable torque. The main difference compared to the single-disc version is the addition of an intermediate pressure plate and three further tangential leaf spring assemblies to the SAC to guarantee the lift of the intermediate pressure plate. To ensure even wear of both clutch discs, so-called lift-off rivets are used to control the intermediate pressure plate. They make sure that the lift of the intermediate pressure plate is half as much as the lift of the pressure plate. A special version of the clutch disc can be modeled to suit vehicle applications that require a damped clutch disc to provide better insulation. The benefit of the multiple-disc SAC is that it allows a reduction in release load for the same engine torque or, conversely, an increase in engine torque transfer at the identical release load level. With engine concepts where high engine torque is accompanied by high engine speeds, the multiple-disc SAC also offers the option of decreasing the outside diameter of the lining, which in turn improves the burst speed characteristic of the clutch disc. Furthermore, the downsizing of the clutch disc helps to stabilize or even slightly decrease the disc's mass moment of inertia compared to a single-disc system of the same size.

3.3.8 Self-adjusting diaphragm spring clutch SAC II (force controlled)

One approach to reducing the actuation forces, or optimizing the actuation force profile, is the refinement of the previous SAC I design. With this clutch type, the force sensor has altered so much in terms of its characteristic curve that with large actuation strokes, the clutch is less sensitive to self-adjustment. This is achieved by leaf springs with a regressive characteristic curve and a sensor diaphragm spring with a linear characteristic curve that attacks outside the pivot point of the main diaphragm spring. In many cases, this sensor diaphragm spring can also be formed directly from the diaphragm spring in the form of sensor fingers. This completely eliminates the need for the sensor diaphragm spring. The SAC II is able to reduce actuation forces by up to 15% with the same transmittable torque. Alternatively, the maximum actuation force can be left at the original level and the ensuing potential used to optimize the characteristic curve slope.

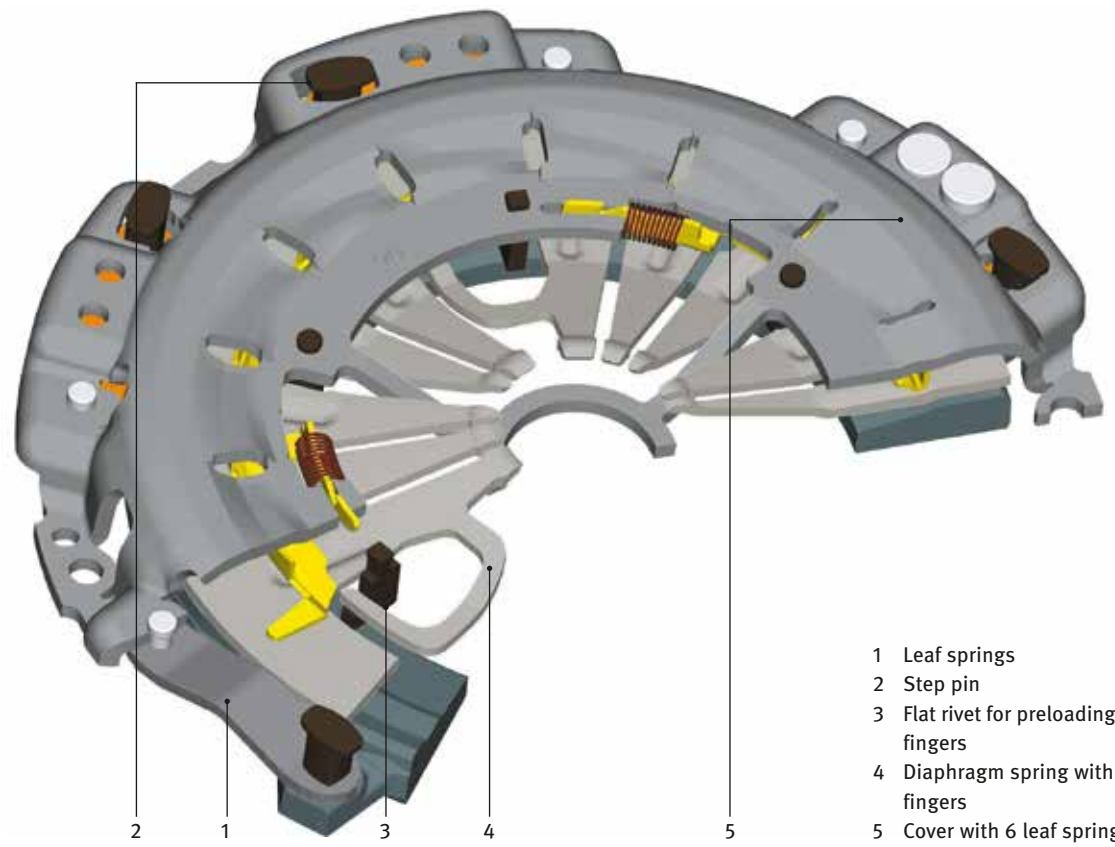

1 Leaf springs
2 Step pin
3 Flat rivet for preloading the sensor fingers
4 Diaphragm spring with sensor fingers
5 Cover with 6 leaf spring shackles

Fig. 38

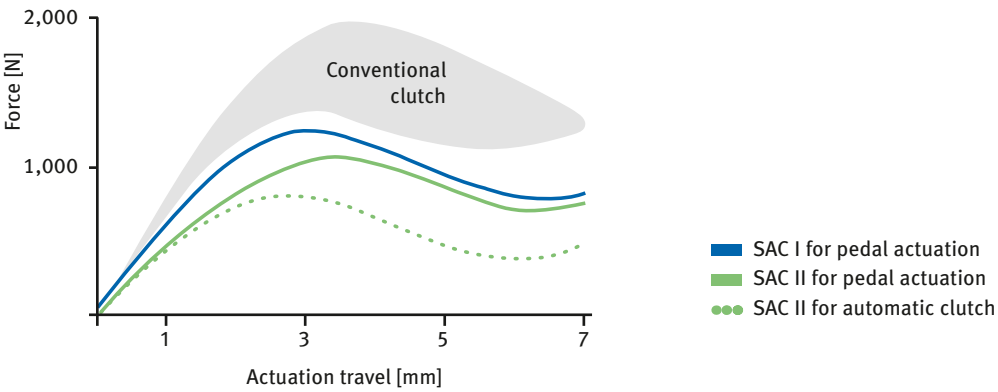

Fig. 39

3.3.9 Self-adjusting diaphragm spring clutch SAC III (force controlled)

The SAC III is a further step in the development of the self-adjusting clutch. To further reduce the difference between the maximum and minimum operating force (Figure 41), certain aspects of the earlier SAC II design were changed to achieve a more uniform force profile in the clutch pedal. Consequently, this version meets even the toughest comfort requirements of the premium segment.

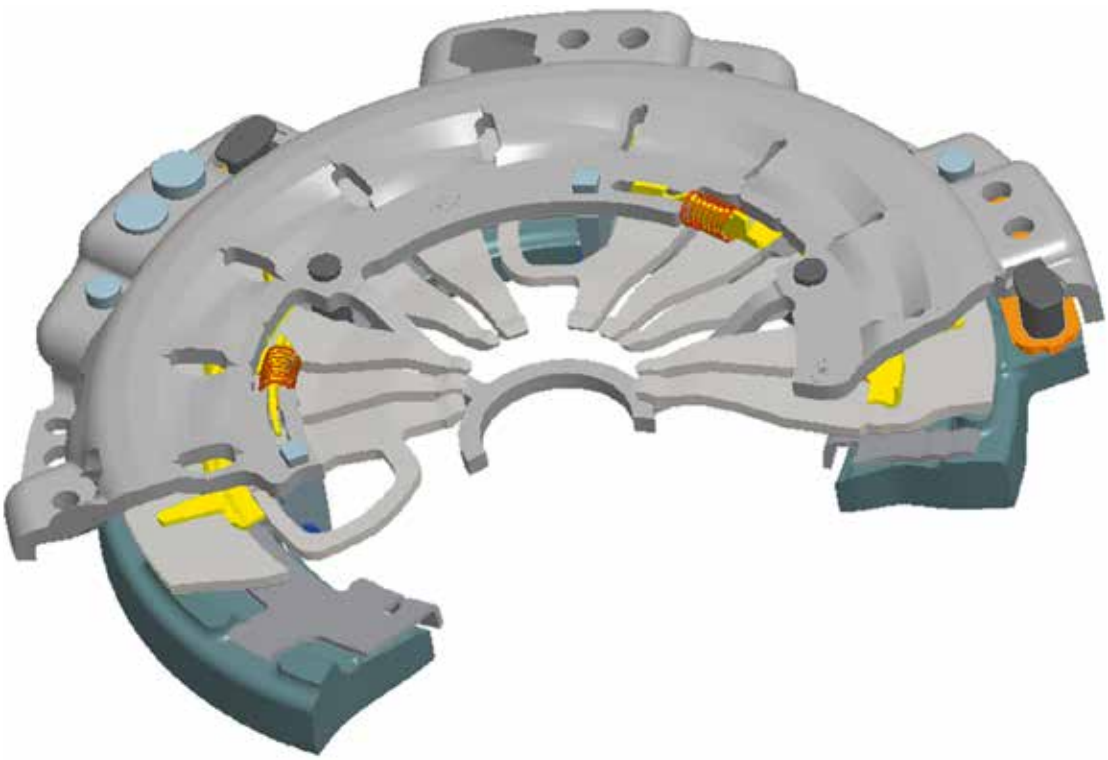

Fig. 40

SAC III with reduced force difference

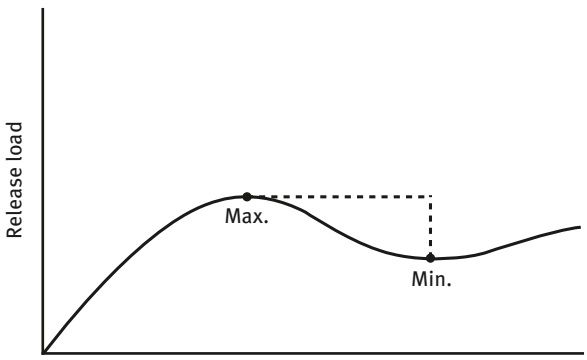

Fig. 41

3.3.10 Self-adjusting diaphragm spring clutch (travel controlled)

Unlike the force controlled wear compensation function of the SAC clutch, the adjustment process with this version is effected by the travel measurement during engagement and disengagement. If the distance between the pressure plate and flywheel changes, the axial travel change is converted into a radial movement of the adjuster ring by a pinion with a directly coupled spindle. The distance is then compensated by the ramp system known from the SAC.

Components of the self-adjusting clutch with travel control

1 Pressure plate with adjuster unit
2 Ramp ring
3 Rivet
4 Support spring
5 Step pin
6 Diaphragm spring
7 Centering bolt
8 Support ring
9 Cover with adjuster spring

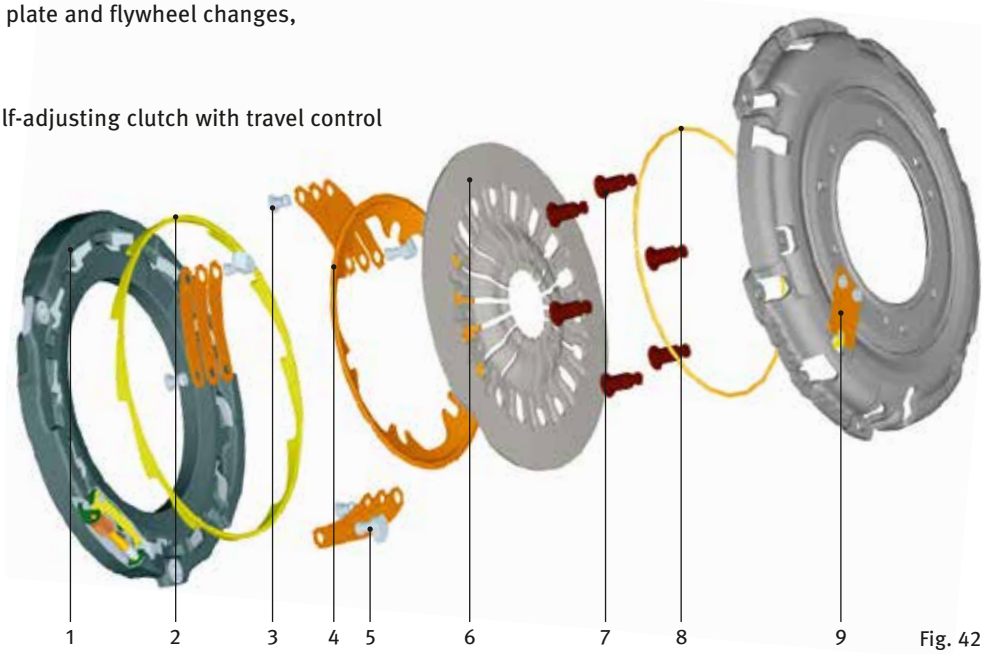

Fig. 42

Function

The diaphragm spring (Figure 43) is connected to the drive pawl/adjuster spring (3) of the self-adjustment mechanism via a spacer bolt (1). Owing to the lift of the diaphragm springs, the spacer bolt is raised further as wear increases; the drive pawl is therefore also achieving a higher lift. This movement is transferred from the drive pawl/adjuster spring to the pinion. A detent (2) stops the pinion in the opposite direction. If the thickness of the friction lining and hence the travel changes, the pinion turns and the clutch adjusts.

In order to achieve finely tuned self-adjustment (Figure 44), there is also a detent (2) split into interim phases, as well as the drive pawl. This allows the pinion (3) to be turned in very small increments. The torsion of the pinion drives the spindle (4) and induces an axial movement of the nut (5). This is fitted with a driver, which engages into the ramp ring (1). The transmission ratio between pinion and nut effectively compensates the height at the ramp ring in 2/1000 mm increments. As a result, a lining wear of 0.2 mm over the course of 100 clutch actuations is adjusted. There is no other system with such a sensitive self-adjustment mechanism. As a result, the operating comfort of the clutch remains at a constant high level from the start through to the wear limit.

Sectional view of adjustment mechanism

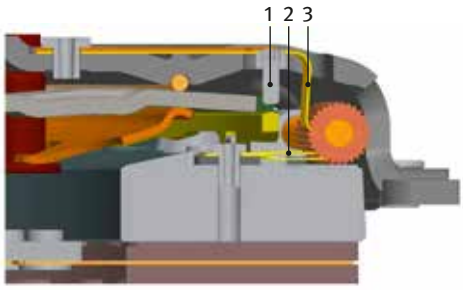

Fig. 43

Components of the adjuster unit

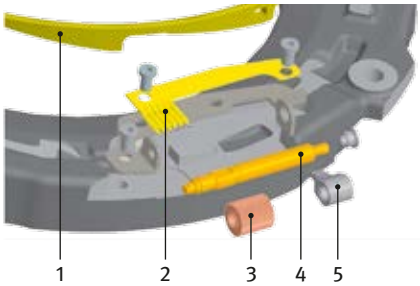

Fig. 44

4 Clutch disc

4.1 Function

The clutch disc is the mating component between the flywheel and pressure plate and as such transfers the engine torque to the transmission input shaft. Friction linings are used to synchronize the engine and transmission speeds and to transfer the engine torque. The materials used must not only fulfill high technical requirements of low wear, a constant frictional coefficient and smooth torque build-up, but also comply with current environmental standards. LuK clutch linings are developed and produced by the company itself.

Clutch discs can be designed to meet the particular requirements of the vehicle model concerned. The cushion deflection influences both the torque build-up when moving away and also the ergonomically synchronized pedal force curve as the clutch engages. As well as the standard version with individual segments, multiple-wave double segments (Figure 45) are used for demanding applications. A uniform bearing area is achieved by supporting the linings effectively. This reduces the running in and sagging under temperature and minimizes changes in cushion deflection throughout the life of the disc.

Individual segments

Double segments

Fig. 45

4.2 Clutch disc with torsional damper

Torsional dampers are used to reduce the rotational irregularities induced by internal combustion engines that create resonance in the transmission and lead to undesirable noise emissions. A clutch disc with a torsional damper is the ideal solution where use of a dual mass flywheel (DMF) is impossible due to the costs involved or the lack of mounting space.

Meeting current comfort requirements, despite weight and fuel-efficient powertrains, calls for ingeniously designed spring damping systems with friction controls (Figure 46). The challenge is to align separate torsional damper characteristics with defined spring stiffness and a friction damper (hysteresis) for each operating condition or load. The torsional damper characteristic curve (Figure 47) can be adapted to the vehicle manufacturer's specific requirements.

These range from a multi-stage design with the best fit in terms of all vibration characteristics and cost-effective compromise solutions with first stage dampers for idle speed to single-stage characteristic curves. The cone centering device developed by LuK compensates the potential axis offset between the engine and the transmission. This guarantees accurate functioning of this damper (first stage damper), which is specifically designed for this load condition, even at idle speed. First stage dampers also allow good vibration isolation at lowered idle speeds and thus help to reduce fuel consumption and emissions.

Clutch disc with various spring damping systems and friction controls

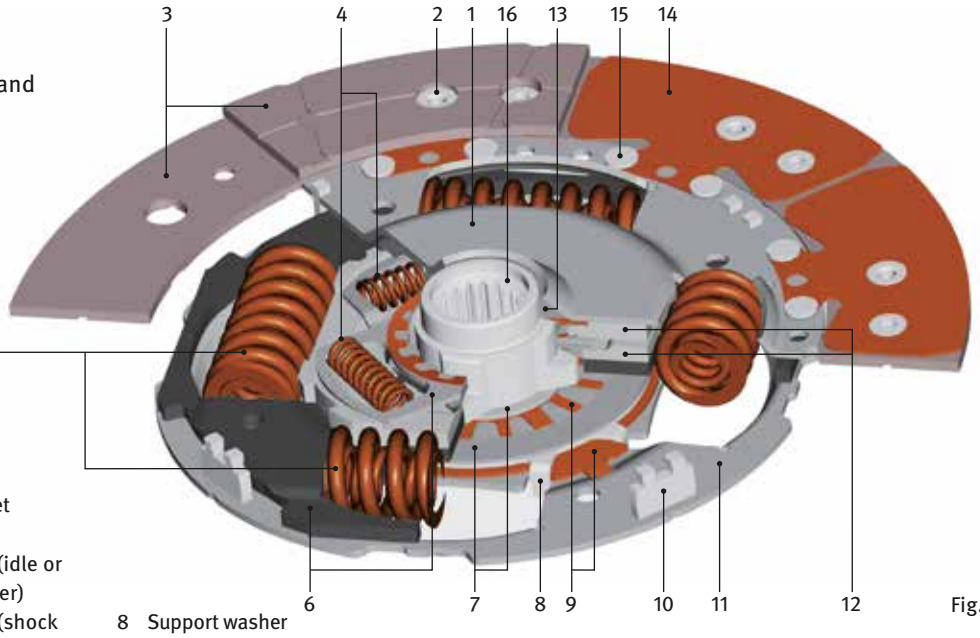

1 Driving disc
2 Friction lining rivet
3 Friction linings
4 Pressure springs (idle or low shock absorber)
5 Pressure springs (shock absorber)
6 Hub flanges
7 Friction rings
8 Support washer
9 Disc springs
10 Distance plate
11 Cover plate
12 Damper cages (idle or low shock absorber)
13 Centering cone
14 Axial spring segment
15 Spring segment rivet
16 Hub

Fig. 46

Torsional damper characteristic curve and driving conditions

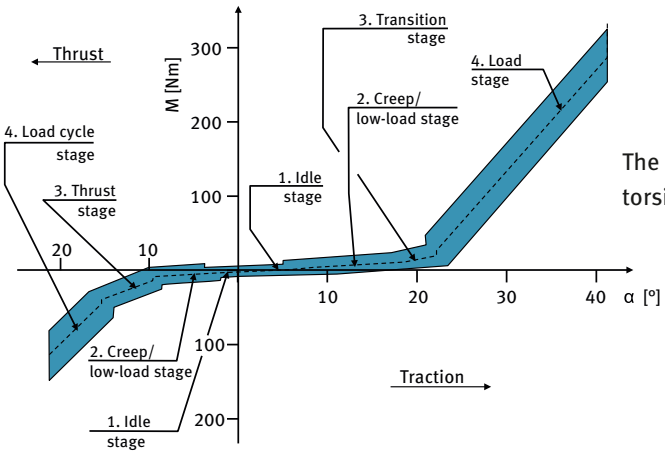

The torsional damper characteristic curve displays the torsion angle relative to the transmitted torque.

Fig. 47

4.3 Clutch disc with anti-judder damper

In the case of all powertrains with friction lock-up transmission elements, alternating torques can be transmitted in the slip phase. These are sensed at high intensity as vibrations or grabbing. This leads to a loss of comfort, which is often associated with the clutch. However, other factors may also induce the excitation of the powertrain. For example, the arrangement of the engine and transmission and the configuration of the accessory drive bearing supports, but also the design of the entire powertrain will significantly influence the grabbing of the vehicle.

The clutch disc with anti-judder damper compensates for grabbing that is not caused by the clutch. In this case, depending on the relative torsion angle, the vibration is variably converted to friction via a slipping clutch, in such a way that it increases along with the increasing excitation torque. In terms of design, this system has opposing rotatable ramps that operate on a diaphragm spring with a linear characteristic curve. This means the clamp load in the friction control device, and therefore the friction, is able to increase exactly as required, once the absorber mass is rotating in relation to the clutch disc.

Structure of a clutch disc with anti-judder damper

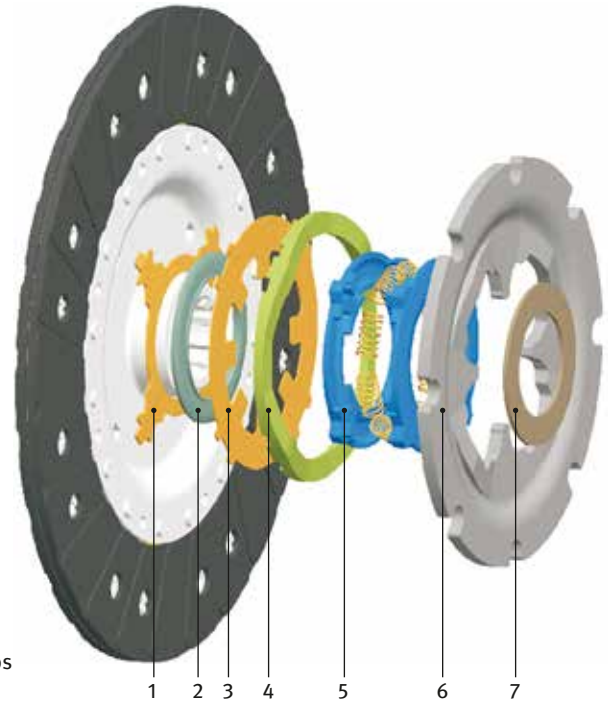

1 Disc spring
2 Friction ring
3 Diaphragm spring
4 Friction ring with ramps
5 Spring cage
6 Absorber mass with ramps
7 Cover plate

Fig. 48

Frequency absorber working range

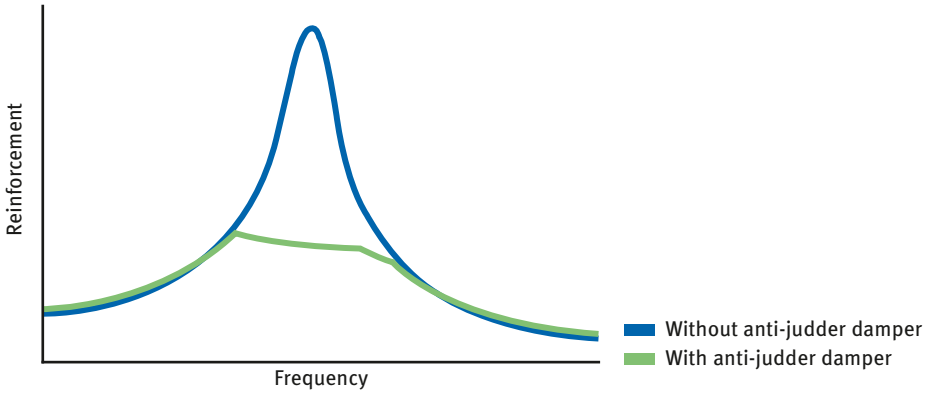

Fig. 49

4.4 Designs

Rigid clutch discs

Features:
- Specially tuned cushion deflection
- For vehicles with a dual mass flywheel

Fig. 50

Advantages:
- Smooth build up of torque when starting
- Safe torque transmission through partial compensation of the temperature deformation of flywheel and pressure plate
- Enables ergonomic pedal forces

Clutch disc with offset correction function

Features:
- Specially tuned cushion deflection
- Single-stage torsional damper for idle speed
- Cone centering device for offset correction
- For vehicles with a dual mass flywheel

Fig. 51

Advantages:
- Smooth build up of torque when starting
- Safe torque transmission through partial compensation of the temperature deformation of flywheel and pressure plate
- Enables ergonomic pedal forces
- Compensation of the offset between transmission input shaft and crankshaft without functional impairment
- Improved vibration damping at idle speed

Clutch disc with single-stage torsional damper

Features:
- Single-stage torsional damper with custom spring stiffness and friction damping
- Specially tuned cushion deflection
- For vehicles with single or dual mass flywheel

Fig. 52

Advantages:
- Reduction of vibration and noise in the powertrain
- Smooth build up of torque when starting
- Safe torque transmission through partial compensation of the temperature deformation of flywheel and pressure plate
- Enables ergonomic pedal forces

Clutch disc with multi-stage torsional damper and separate first-stage damper and main damper

Features:

- Multi-stage torsional damper with separate first-stage damper and main damper
- The individual stages are adapted to the load conditions and can be defined independently of each other
- Specially tuned cushion deflection
- Cone centering device for offset correction
- For vehicles with a single mass flywheel

Fig. 53

Advantages:

- Reduction of vibration and noise in the powertrain, designed specifically for weight-optimized and fuel-efficient transmissions
- Improved vibration damping
- Smooth build up of torque when starting
- Safe torque transmission through partial compensation of the temperature deformation of flywheel and pressure plate
- Compensation of the offset between the transmission input shaft and the crankshaft without functional impairment
- Enables ergonomic pedal forces

4.5 Clutch discs for dual mass flywheels

If a dual mass flywheel (DMF) is used to reduce the torsional vibrations in the powertrain, clutch discs can be used with or without a torsional damper. The combination of a DMF and a clutch disc with a single-stage torsional damper is always used when the highest requirements for comfort need to be met. For lower requirements, rigid clutch discs or clutch discs with offset correction are a more cost-effective alternative. Engine and transmission tolerances, especially on transmission input shafts without pilot bearings, may cause an offset between the crankshaft and transmission. In conjunction with rigid clutch discs, in extreme cases, this offset may result in idling noise and increased tread wear. One solution to this problem is a clutch disc with offset correction. At idle speed under low-load conditions, this enables a radial movement of the hub that compensates for centrifugal forces. The clutch disc springs with an offset correction function only operate under low-load conditions.

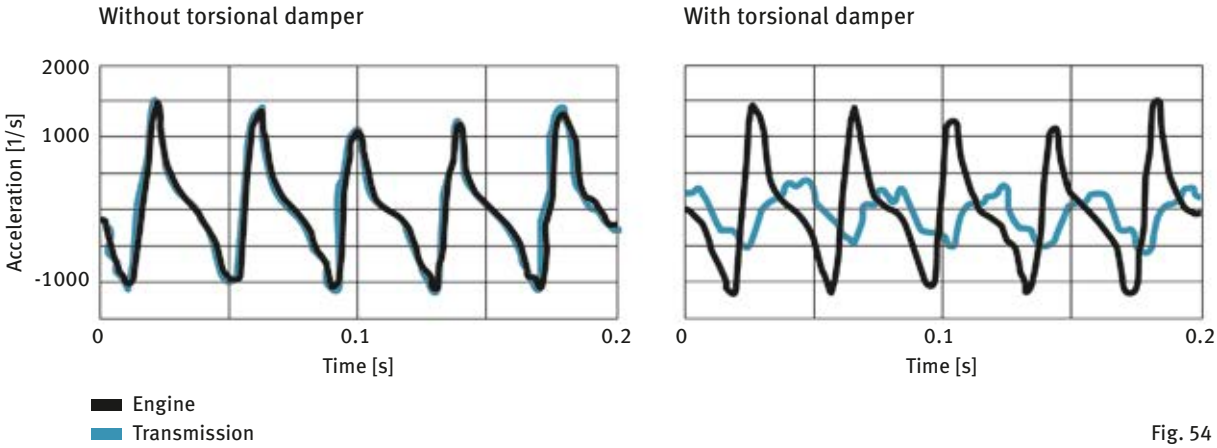

Fig. 54

The diagrams (Figure 54) show the torsional vibration behavior of the engine and transmission at idle speed. Without a torsional damper, the vibrations are directly transmitted to the transmission. Some of the vibration is absorbed by a torsional damper.

5 Clutch lining

The clutch lining is one of the most heavily stressed power transmission components. In most cases, it is riveted to the clutch disc and, in connection with the clutch pressure plate and flywheel, it first creates a sliding followed by an adhesive friction system. The main challenge is to transfer the engine torque to the transmission with maximum comfort in all operating states.

Dry couplings were already in use in early motor vehicles. Linings made of beech or oak were used as a friction material. The invention of phenolic resin at the beginning of the 20th century laid the foundations for the organic clutch lining technology that is standard today.

The benefits of phenolic resins were quickly recognized and they were used as a binder for brake and clutch linings. For the first time, it was possible to produce parts from an easily malleable mass that retained its shape after hardening, even in extreme heat.

There are two main types of clutch lining:

- Non-organic linings
- Organic linings, wrapped or pressed

Non-organic linings, also known as sintered or Ceram linings, are mainly used in the tractor sector. The advantage of these linings is a higher frictional coefficient μ ~ 0.4 at temperatures of up to 600°C. By contrast, organic pads have a frictional coefficient of μ ~ 0.3 and are able to withstand thermal loads of up to 350°C. The advantage of organic linings is the much better levels of comfort (less likely to judder). That is why they are still essential for the PC sector and most commercial vehicle applications.

Manufacturing processes

Organically wrapped clutch linings as we know them today have been manufactured since 1930, with an impregnated ribbon providing the basis. Raw materials such as rubber, resins or extenders are dissolved in an organic solvent (e.g. Toluene or water) to manufacture solvent-based ribbon. Self-produced yarn made from glass, copper, aramid and synthetic fibers are first passed several times through a tank containing dissolved raw materials (friction cement), where the yarn absorbs the friction cement. The impregnated yarn is then routed through a drying tower, where the solvent is evaporated and recovered in a complex process. The raw materials used have a major influence on the properties of the friction lining.

Solvent-based ribbon production

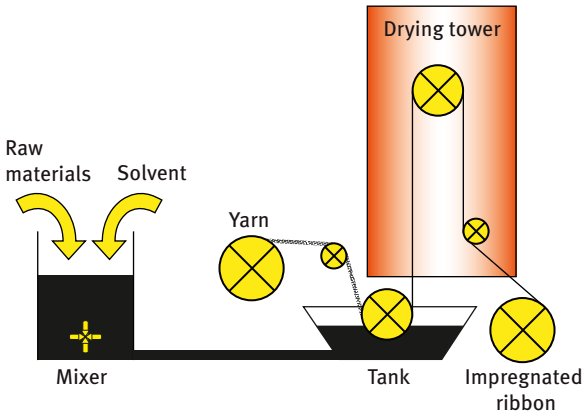

Fig. 55

Solvent-free ribbon production

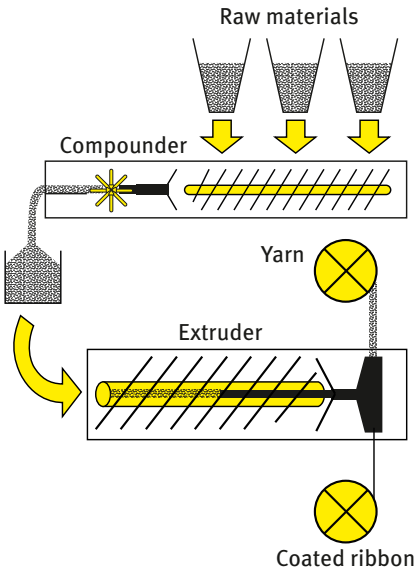

Fig. 56

Looking back at the history of clutch linings, it should be noted that technical advances in clutches have had only a minimal impact on clutch lining manufacturing technology. This changed with the newly developed LMF process (solvent-free manufacturing).

Impregnated or coated ribbons (Figure 58) are used to automatically produce wrapped parts in the next process step. Hydraulic presses then form the pressed parts using pressure at high temperatures. Special furnaces with different temperature programs control the hardening process, which lasts up to 30 hours. Finally, the pressed parts are ground to the required size, drilled and impregnated against dust or corrosion.

In contrast to solvent-based ribbon manufacturing, in the solvent-free process the raw materials are kneaded to a friction cement (Figure 59) or compounded (mixed together) and then granulated. This has the advantage that, due to the extreme toughness of the kneaded mass, no settling or floating of the raw materials takes place, as happens when solvents are used. The granular friction cement is then softened again in an extruder (screw press) under high pressure and at a high temperature to coat the yarn. This ground breaking process, which dispenses with solvents, produces significantly less CO_2 than solvent-based production, thanks to the lower energy consumption. However, the main benefit is the much larger selection of raw materials that can be used as they are not determined by the solvent. This significantly improves the performance of the clutch linings. In addition to the frictional coefficient, wear, and ease of movement (tribological properties), which are improved by using the new, solvent-free ribbon, there are various design and material solutions that have a positive effect on the mechanical properties of the lining (strength and thermal resistance).

Different clutch lining designs

Fig. 57

Wrapped part

Fig. 58

Granular friction cement

Fig. 59

This manufacturing process created specific opportunities for developing the lining. One example is organic sandwich technology. The so-called sandwich design connects two different wrapped parts pressed together to form an inseparable unit.

The friction layer (first wrapped part) can be specifically optimized in terms of tribological properties without needing to consider strength. The strength is increased by using a special carrier layer (second wrapped part).

Stages of lining manufacture

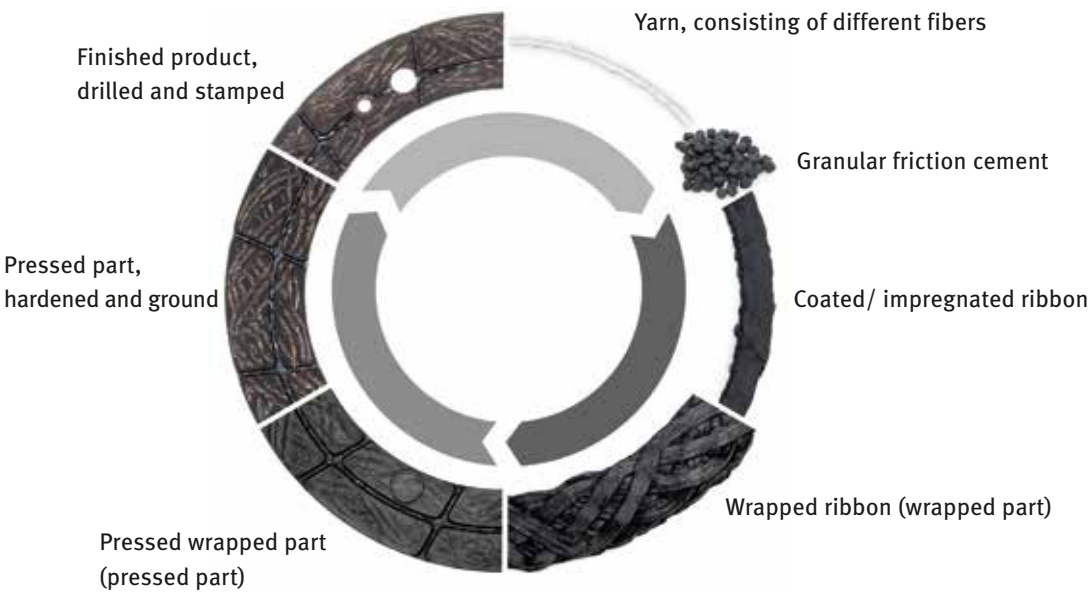

Fig. 60

A double clutch transmission places extremely high demands on clutch linings. This is exacerbated by the fact that it has to be implemented with minimum mounting space. A special slim disc design was developed to solve this problem.

The slim disc lining (Figure 61) is built up in several layers, and the second wrapped part is replaced by a metal sheet. This guarantees even higher strength, and the driven plate is also used to connect the clutch lining. The lining is secured by the rear plate connection of the disc assembly. For the same volume of metal worn away, approximately 2 mm of axial mounting space can be created.

Slim disc lining

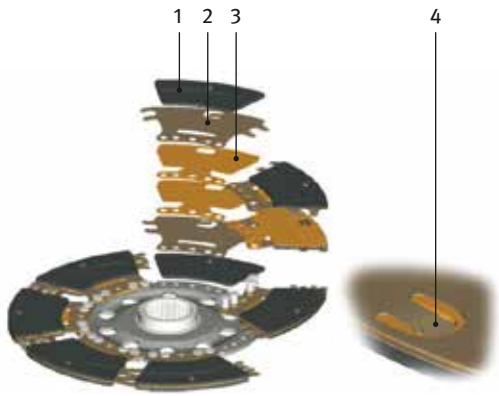

1 Segment
2 Carrier segment
3 Lining spring segment
4 Plate connection

Fig. 61

6 Hydraulic release system

For vehicles with manually operated dry clutches, the pedal force applied by the driver needs to be amplified before being transmitted to the clutch. Vehicle developers have come up with various solutions to perform this function. Originally the pedal force was transmitted via a cable from the pedal to a lever mechanism in the bell housing. The clutch was operated via the lever and a clutch release bearing. The market share of these systems is now negligible, because increasingly narrow engine compartments make it difficult to lay a cable between the pedal and the lever in as straight a line as possible. Tightly curving radii in a cable is not feasible because friction and wear increases to an unacceptable level and comfort during clutch operation is adversely affected.

Hydraulic clutch control is used in modern foot-actuated clutches. A distinction is made between two systems:

- Semi-hydraulic system
- Fully hydraulic system

In the semi-hydraulic systems, the cable is replaced by a hydraulic line consisting of a master cylinder on the pedal, a pipe and a slave cylinder on the outside of the transmission.

In a fully hydraulic system (Figure 62), the functions of the transmission side clutch release mechanism are taken over by a concentric slave cylinder (CSC). This is directly located in the bell housing between the transmission and the clutch.

Design of a fully hydraulic clutch system

1 Dual mass flywheel
2 Clutch
3 Transmission input shaft
4 Concentric slave cylinder (CSC)
5 Vibration damper/anti-vibration unit
6 Peak torque limiter
7 Hydraulic pressure line
8 Hydraulic fluid reservoir
9 Master cylinder

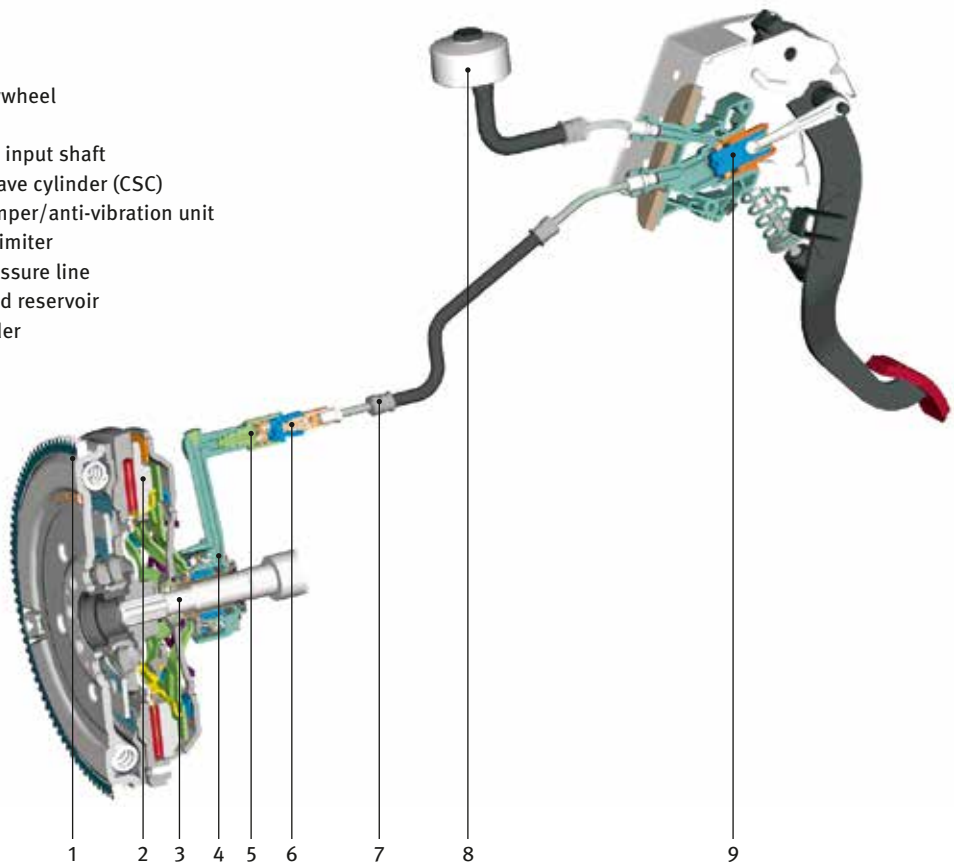

Fig. 62

6.1 Master cylinder

The master cylinder (Figure 63) consists of a housing, a piston with piston rod and a configuration of two seals (primary and secondary). It has a hydraulic connection to the slave cylinder pressure line, which is usually a quick connector, but in some applications there is also a screw connector as found in brake technology. The master cylinder also has a connection for supplying the system with hydraulic fluid. This is often via a hydraulic line connection to the brake fluid reservoir. There are also solutions in which the clutch cylinder has its own reservoir. The primary seal separates the reservoir from the hydraulic pressure chamber, which allows the pressure build-up required to actuate the clutch. The secondary seal separates the low-pressure area of the reservoir from its surroundings. When the pedal is released, a spring on the pedal or the master cylinder ensures that the piston fully retracts. The connection between the reservoir and the pressure chamber is open when the pedal is in the resting position. Trapped air in the system is now able to escape and liquid can flow in. This is where the self-adjusting mechanism of the hydraulic system comes into play.

Section view of master cylinder

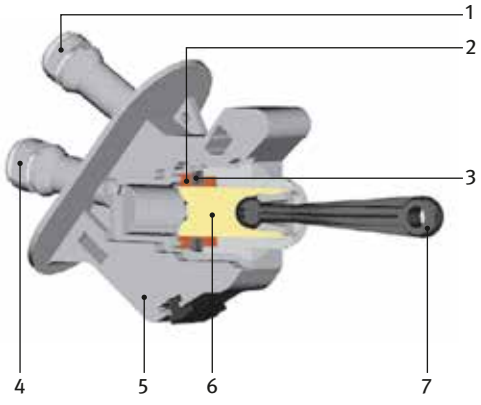

Fig. 63

1 Connection to the reservoir
2 Primary seal
3 Secondary seal
4 Connection to the pressure line
5 Housing
6 Piston
7 Piston rod

The housing of the first hydraulic clutch master cylinders used to be made out of metal, which often required a time consuming manufacturing process. The introduction of a plastic cylinder housing led to simpler production, but plastic compatible design processes were still at an early stage of development and far removed from the current possibilities. Both the piston and seal tracks were made of surface hardened metal. The connecting rods were usually made of steel and the cylinders had a large number of individual seals.

Ongoing development work made it possible to reduce the number of individual components by about half, and at the same time largely abandon the use of costly metal parts. Reliable plastic seal tracks were implemented using appropriate material combinations and glass fiber-reinforced thermoplastics are increasingly replacing the steel connecting rods. Combining the functions reduced the number of seals from the original five to two.

The disadvantage of the lightweight plastic housing of the master cylinder is its greater propensity to squeak, caused by the speed-dependent frictional coefficient between the elastomer seals and the seal track. Effective corrective measures such as coatings or special greases have now been developed to deal with this. Pistons made from duroplastic material in connection with an optimized grease are used in production. This means that irritating squeaking noises can reliably be prevented, even under critical climatic conditions and using different types of brake fluid.

6.2 Master cylinder with position sensor function

Anyone who has a vehicle with a start-stop system is familiar with the following behavior: The engine turns off automatically whenever it is not required. If the gear-shift lever is brought into the idle stage and the foot is removed from the clutch, the electronic system turns the engine off. All that is needed to restart is to press clutch panel; the engine starts in an instant with no further action.

This interim switch-off saves fuel and reduces CO_2 emissions For a start-stop function to work smoothly, the vehicle constantly requires information on the clutch pedal position. This task is performed by an installed extensometer. In a contactless process, it converts various piston positions in the cylinder into different electrical signals and passes them on to the engine and transmission control system.

Master cylinder with inductive path and position sensor

Fig. 64

6.3 Hydraulic pressure line

The pressure line is based on the brake lines in the vehicle. It consists of a hose and a steel or completely plastic tube. A hose is required for the steel tube to offset movements between the vehicle's powertrain and chassis. The prescribed progression of the line must be main-tained to ensure that there is no contact with other components in the engine compartment. Effective heat protection must be implemented for plastic lines and hoses that are placed in the vicinity of hot zones, such as turbo chargers or exhaust manifolds.

Fig. 65

6.4 Hydraulic vibration damper (anti-vibration unit)

In vehicles, the engine combustion process may give rise to amplitudes of vibration in the clutch, which continue through the release system to the pedal (Figure 66). The driver then senses these vibrations as an unpleasant tingling on the foot or perceives them as noise.

To prevent the transmission of vibrations, filter elements can be used in the line. These are either membrane dampers or anti-vibration units (Figure 67) with two non-return valves arranged opposite each other or one hose valve.

Vibrations on the clutch pedal

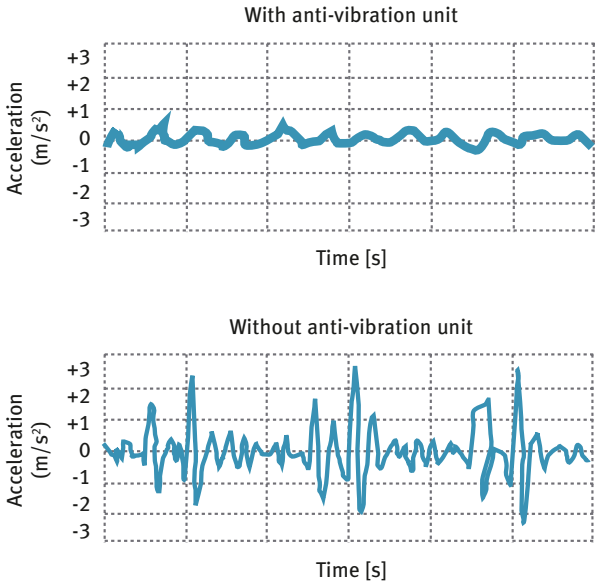

Fig. 66

Anti-vibration unit

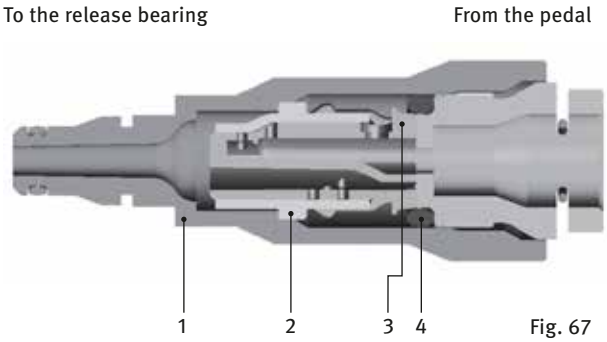

Fig. 67

1 Housing
2 Hose element
3 Hose retainer
4 Source ring

6.5 Peak torque limiter

The peak torque limiter (Figure 68) reduces the volume flow in the hydraulic system at high engagement speeds using movable faceplates. This should prevent an overload of the powertrain in case of sudden engagement, e.g. in case of slippage of the clutch pedal (Figure 69).

In the case of maintenance, peak torque limits must not be removed from the hydraulic system, otherwise this can result in damage to the transmission, drive shafts or the dual mass flywheel.

Peak torque limiter

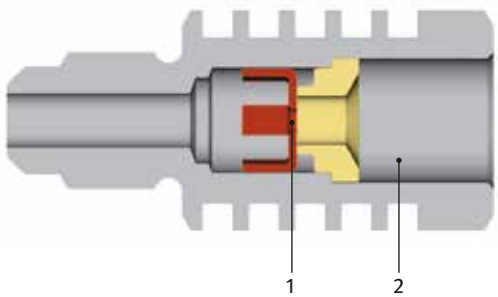

1 Movable faceplate
2 Housing

Fig. 68

Slippage of the clutch pedal

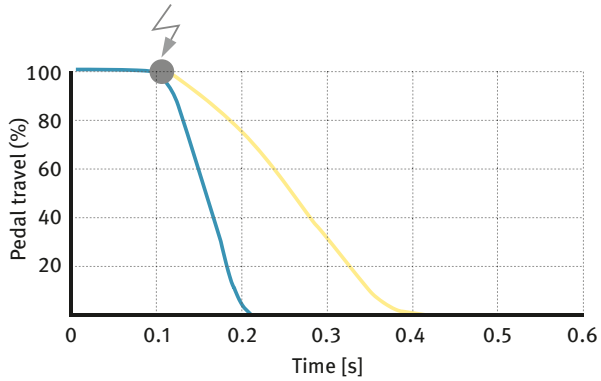

Fig. 69

Pressure releases in the release system in relation to the engagement speed

6.6 Slave cylinder

In a semi-hydraulic system, the slave cylinder is located outside the bell housing and is used to activate the release fork (Figure 71). In the example shown, the slave cylinder consists of a housing, a piston with seal, a preload spring and a vent bolt. The preload spring ensures a permanent preload of the release bearing, so that this also rotates reliably with the clutch in a pressure-free state of the release system, and disturbing noises between bearing and diaphragm spring fingers are prevented. A bleed screw allows for the filling and bleeding of the system during maintenance.

Concentric slave cylinder in installed position

Fig. 70

Slave cylinder in installed position

Fig. 71

6.7 Concentric slave cylinder (CSC)

Fully hydraulic systems are equipped with a concentric slave cylinder. This consists of a ring-shaped hydraulic cylinder with a built-in release bearing located in the bell housing between the transmission and the clutch, centrally to the transmission input shaft. This means that the lever in the bell housing, as it is used for arrangements with a cable pull or slave cylinder, is omitted. Additionally, this system has a high degree of design flexibility in terms of the placement of the hydraulic line in the engine compartment.

Concentric slave cylinder

1 Preload spring
2 Piston
3 Seal
4 Housing
5 Dust protection bellows
6 Release bearing

Fig. 72

6.8 Clutch servo assistance (CSA)

Electrohydraulic clutch servo assistance is used to reduce pedal effort by supplying an external source of power. An electric motor drives a hydraulic pump, which if necessary supplements the pressure exerted by the driver in the release system. As a result the maximum pedal effort is reduced by half.

Clutch servo assistance

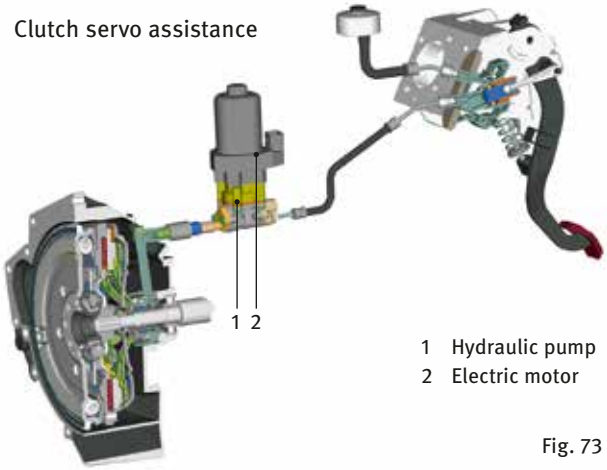

1 Hydraulic pump
2 Electric motor

Fig. 73

6.9 Release bearing

The release bearing forms the link between the rotating diaphragm spring on the engine side and the immovable ejection mechanism on the transmission side. It is operated on a flange-mounted sleeve in the bell housing. The guide sleeves from release bearings and concentric slave cylinders are designed so that the thrust ring can be moved radially by a defined amount. As a result, a central position in relation to the diaphragm spring tips of the clutch is achieved at all times in drive operation. This self-centering reduces the wear in the area of the diaphragm spring fingers and thereby counterbalances a possible misalignment between engine and transmission.

To transmit release loads to the clutch pressure plate, angular contact ball bearings are used. This design can transmit high axial forces, is resistant to high speeds and can be used up to an operating temperature of 150°C. Release bearings have a high rating life and are maintenance-free thanks to permanent lubrication.

Standard release bearing

Fig. 74

Release bearing for pull-type clutch
In contrast to a standard clutch, the power flow for this design is interrupted by pulling on the diaphragm spring tips. A pre-tensioned snap ring serves as a connection element, which engages in the diaphragm spring during assembly. This ring is locked in position by an assembly aid when new. When the release system and clutch combine, the assembly aid moves and the snap ring is released.

Locked snap ring

Fig. 75

If the assembly aid of the release bearing is moved by hand before installation, the snap ring is triggered. As a result, no connection to the diaphragm spring can be created and the release system is ineffective.

Snap ring triggered

Fig. 76

Additional functions
Release bearings can be equipped with additional functions to increase operating comfort. These include the aforementioned self-centering and the offset mechanism shown in Figure 77. Here the release bearing is connected with an axially movable thrust ring, which is in contact with the tips of the diaphragm spring. Possible component tolerances that can result in pedal vibrations are thus effectively prevented.

Release bearing with axially movable thrust ring

Fig. 77

6.10 Work on the release system

Sensors
Increasingly, master and slave cylinders are equipped with sensors to measure the actuation travel and to forward this to the engine and transmission control unit. As a rule, systems equipped with sensors can be recognized by the fact that a small housing with a plug or cable connection is attached to the master or slave cylinder. Each sensor is coordinated individually to the master or slave cylinder and therefore forms a unit with it. Sensors must not be removed from one cylinder and attached to another one. In the case of a malfunction of one of the components, a new cylinder/sensor combination must always be installed.

Hydraulic fluid
Fully hydraulically actuated clutches can be equipped with closed or externally supplied release systems. In the case of a closed system, there is no connection to other hydraulic systems eg. brakes. The system is maintenance-free, so there is no to top-up or change the hydraulic fluid. An externally supplied system is connected to the brake fluid reservoir via a hose. Brake fluid absorbs water as a result of being used in the vehicle, which can result in damage to the seals or to the development of noise in the master cylinder. To prevent this it is necessary to replace the brake fluid at least every two to three years. When choosing replacement fluid, it is strongly recommended that the recommendations of the respective vehicle manufacturer are followed. The maintenance of a hydraulic release system is normally limited to the replacement of the brake fluid. Similarly to the brake system, the fluid is refilled by pumping on the pedal and synchronous opening and closing of the bleed screw. So that the rinsing process is carried out as completely as possible and no air bubbles can enter the system, the specific recommendations of the vehicle manufacturer should also be considered in such cases. Cleanliness is imperative during all work on the hydraulic system. Even the slightest dirt contamination can result in leakage and malfunctioning. For systems that are designed to use brake fluid, mineral oil should under no circumstances enter the system. For this reason, the cylinders and the connectors should not be relubricated. Even the smallest amounts of mineral oil can result in the destruction of the seals. For clutch systems that have a common reservoir with the brake, there is a definite risk of contamination right into the brake system.

Release shaft
The release shaft must always be removed to assess damage, because a test whilst installed is impossible. A run-in or worn bearing arrangement leads to tilting of the release shaft and therefore to stiffness and/or grabbing. The bearing arrangement must always be lubricated.

Release lever/bearing arrangement
Professional corrective maintenance of a clutch should include an inspection of the clutch release lever and its bearing arrangement. During this inspection, the supporting surfaces of the lever and the counter bearing in the transmission must be examined carefully for signs of wear. If there is pronounced wear, the components must be replaced.

Guide sleeve
The guide sleeve must be positioned absolutely centrally and exactly parallel to the main transmission shaft. Pressure or wear points on the sleeve can interfere with the sliding of the release bearing and result in grabbing or slipping of the clutch. Damaged or worn guide sleeves must always be replaced, as this is one of the main causes of stiff clutch operation.

Release bearing
A functional test of the release bearing in the workshop is not possible. Even a worn thrust ring inevitably leads to noise. It must therefore generally be replaced when the clutch is replaced. After installation it must slide easily on the guiding sleeve.

Concentric slave cylinder (CSC)
To prevent damage to the CSC, the following procedure is recommended during installation:

- Install CSC and fit screws manually to the support
- Mount adapter for hydraulic line (if present)
- Tighten screws to 2 Nm
- Attach screws according to vehicle manufacturer specifications and instructions

Clutch cable
Because a precise functional test of the cable is not possible in the workshop, it is recommended that it is replaced during every clutch replacement. Please note the correct assembly, a cable that is too severely bent or kinked will adversely affect operating comfort.

Lubricant
Thanks to modern materials, the current release system does not need much lubrication. It is only used on precisely defined points according to the vehicle manufacturer's specifications.

7 Dual mass flywheel (DMF)

In the past few decades, the rapid development of vehicle technology has resulted in more and more powerful engines, while at the same time the quality requirements of drivers have consistently increased. As a result of the reduction in vehicle weight and the optimization of body shapes in wind tunnels, other sources of noise are now more perceptible now wind noise has reduced. Other factors contributing to this are lean-burn combustion systems and engines that can be driven at extremely low speed or new generations of transmissions with low-viscosity oils.

In the middle of the 1980s, the decades-long further development of the classical torsional damper in the clutch disc reached its technical limits. Continuously enhanced engine outputs, and the resultant increase in engine torques – with the same or even smaller mounting space – could no longer be sustained to a sufficient extent. Extensive development work at LuK resulted in a simple but very effective solution: the dual mass flywheel (DMF). At the time it was a novel torsional damper concept for the powertrain.

Section model of DMF

Fig. 78

Vehicles equipped with DMF –
Inventory stock from 1990 to today

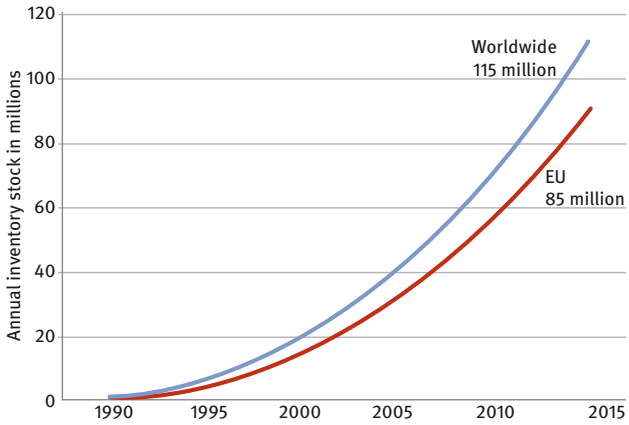

Fig. 79

Why DMF?

Due to the periodic combustion processes of a reciprocating piston engine, torsional vibrations are activated in the powertrain. The noises and vibrations that arise, such as gear rattle, boom and clunk, result in increased noise and reduced driver comfort. The objective during the development of the dual mass flywheel was therefore to uncouple the torsional vibrations generated in the engine from the rest of the powertrain as much as possible.

7.1 Design

A standard dual mass flywheel consists of the primary flywheel and the secondary flywheel. The two decoupled flywheel masses are connected to each other via a spring/damping system and positioned opposite each other via a deep groove ball bearing or a plain bearing so they can be turned. The primary flywheel has a ring gear assigned to the engine and is bolted to the crankshaft. Together with the primary cover, it encloses a cavity that forms the spring channel. The spring/damping system consists of arc springs that lie in guide shells in the spring channel and fulfill the requirements for an "ideal" torsional damper with extremely low project costs.

The guide shells ensure accurate guidance, and a grease filling in the spring channel reduces the friction between the arc spring and guide shell. Engine torque is transferred via the flange, which is riveted together with the secondary flywheel and grips between the arc springs with the tabs of the flange. The secondary flywheel increases the mass moment of inertia on the transmission side. For better heat dissipation, it is provided with air flow openings. Because the spring/damping system is located in the DMF, a rigid clutch disc design without torsional damper is generally used.

Standard DMF

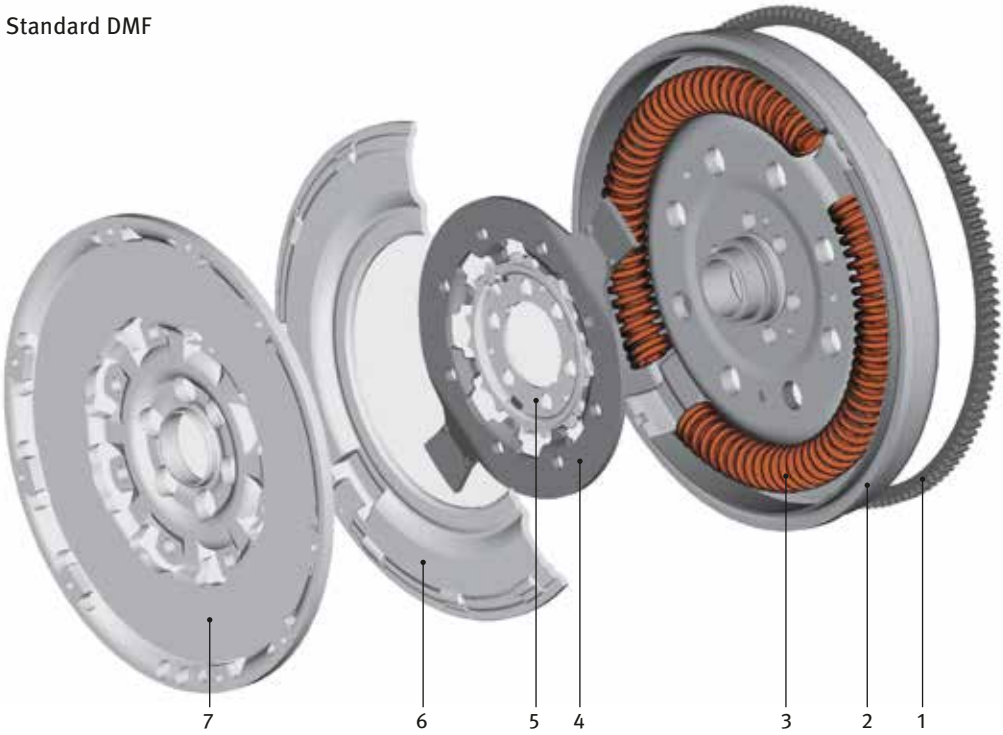

Fig. 80

1 Ring gear
2 Primary flywheel
3 Arc spring
4 Plain bearing
5 Flange
6 Floating pivoted reaming holder
7 Primary cover (cross section)
8 Secondary flywheel

The advantages of the dual mass flywheel at a glance:

- First-class driver comfort
- Absorbs vibrations
- Insulates against noise
- Fuel saving thanks to low engine speeds
- Increased shifting comfort
- Reduced synchronization wear
- Overload protection for the powertrain

7.2 Function

The basic principle of the DMF is simple and efficient. With a secondary spring mass system on the transmission input shaft, the resonance point, which lies between 1,200 and 2,400 rpm in original torsional dampers, is shifted to lower speeds. As a result, outstanding vibration isolation is already present from idle speed.

For the previously standard design with a conventional solid flywheel and torsionally damped clutch disc, the torsional vibrations in the idle range are passed on to the transmission largely unfiltered and cause the tooth flanks of the gearwheels to knock against each other (gear rattle).

By contrast, as a result of using a DMF, the torsional vibrations introduced by the engine are filtered out by the spring/damping system, and the transmission components are not burdened by them – there is no grabbing and the expectations with regard to comfort are fully met.

Comparison of design and function

With conventional flywheel

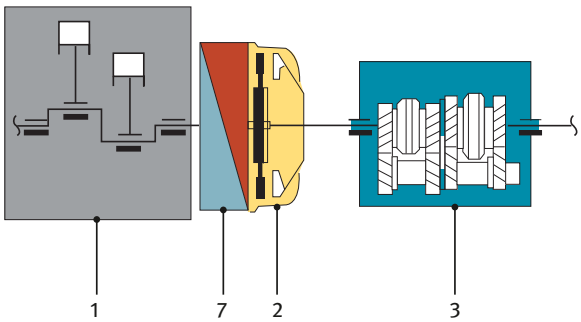

1 Engine
2 Clutch
3 Transmission
4 Torsional damper

With dual mass flywheel

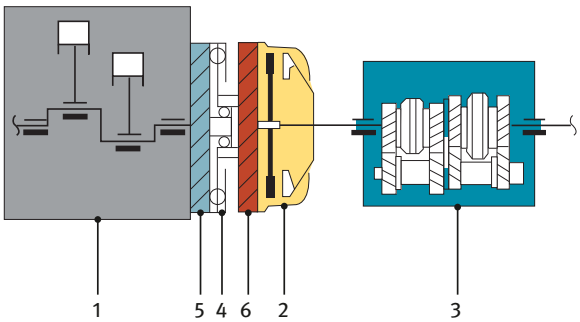

5 Primary flywheel
6 Secondary flywheel
7 Flywheel

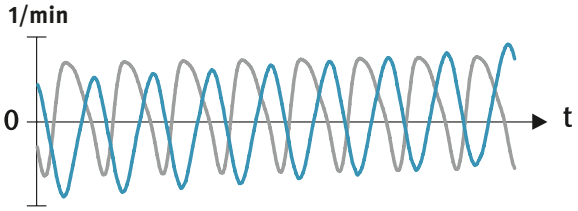

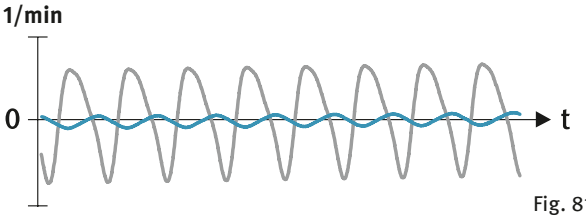

Fig. 81

7.3 Special designs

Special designs are intended specifically for use in CVTs (continuously variable transmissions) and double clutch transmissions (DCTs). The essential difference to the standard design lies in the changed design of the secondary mass. This is not designed as a flywheel mass with a built-in friction surface, but in the form of a flange. As a result the connection to various drive concepts can be realized with relatively minor changes.

DMF for double clutch transmission

Fig. 82

8 Auto-shift gearbox (ASG)

The auto-shift gearbox represents an extension of the proven manual transmission. All actions that the driver performs with a conventional manual transmission when changing gears are performed by actuators in the ASG. These properties make the technology interesting particularly for small to medium-sized vehicle classes, because the costs are significantly lower than for an automatic transmission with torque converter. No clutch pedal is required and the usual hand lever is replaced by a selector lever.

Similarly to a torque converter automatic transmission, the selector lever has neutral, reverse, automatic and manual gearshift positions. The lever is electronically connected to the transmission rather than mechanically. Because the auto-shift gearbox is based on the principle of a manual transmission, there is no parking gear like you would find on a torque converter automatic transmission. As with a manual transmission, when turning off the ignition the current gear is engaged and the clutch is automatically closed.

8.1 Technology

Electrical motors are arranged on the transmission, which take over the movements for declutching and shifting gear from the driver. They are controlled by the transmission control unit, which always generates the right time for the gear shift actions from a number of CAN BUS signals from the vehicle's systems.

In the ASG this control unit is located in a common housing with the electrical motor and the mechanics, which take care of the clutch control. If the control unit is replaced, the appropriate software for the vehicle variant must be installed and an adjustment must be performed.

ASG shift gate (source: Opel)

Fig. 83

A minimized actuation force of the clutch is required so that the electrical motors can be as small, light and fast-responding as possible. This is achieved by using a self-adjusting clutch (SAC). For the gear change, the manual transmission lever is replaced by an assembly with two electric motors. One electric motor is responsible for selecting the shift track, corresponding to the lateral movement of the hand during shifting. The second, larger electric motor takes over the engagement of the gears.

8.2 Functions

Creep function
When the brake is released the clutch is applied lightly. The vehicle rolls gently on the flat without any need to step on the gas. The torque is limited to protect the clutch; the applied torque is reduced at higher clutch temperature.

Determining the clutch touch point
Due to temperature fluctuations and other outside influences, the point at which the clutch begins to transfer engine torque to the wheels changes. This point is called the touch point. The auto-shift gearbox always adjusts this touch point when the vehicle is standing for a longer period of time with the brake applied and the engine running, for example at traffic lights. During the process, the clutch is closed repeatedly for a short period of time to such an extent that the light contact of the pressure plate with the clutch disc causes the engine to respond. The clutch then opens again immediately. This procedure is normally not noticed by the driver and requires stable idling of the engine. Also important for the correct function is that during a replacement of the control unit or the clutch a successful initial operation is performed with the diagnostic device. A correct touch point ensures that the engagement cycles are performed softly and without long slip times on the clutch.

Clutch protection
The auto-shift gearbox recognizes when the clutch, for example, is heated up due to a number of consecutive starts on an incline. To slow down the rise in temperature, the creep function is deactivated gradually. When starting, the clutch is closed faster to prevent extended periods of clutch slipping.

Advantages of the ASG:

- High efficiency and low consumption at optimal shift points
- Option of automatic or manual operation
- Easier maneuvering without stalling
- Small and light components
- Increased driver comfort
- Low price

Schematic representation of an ASG

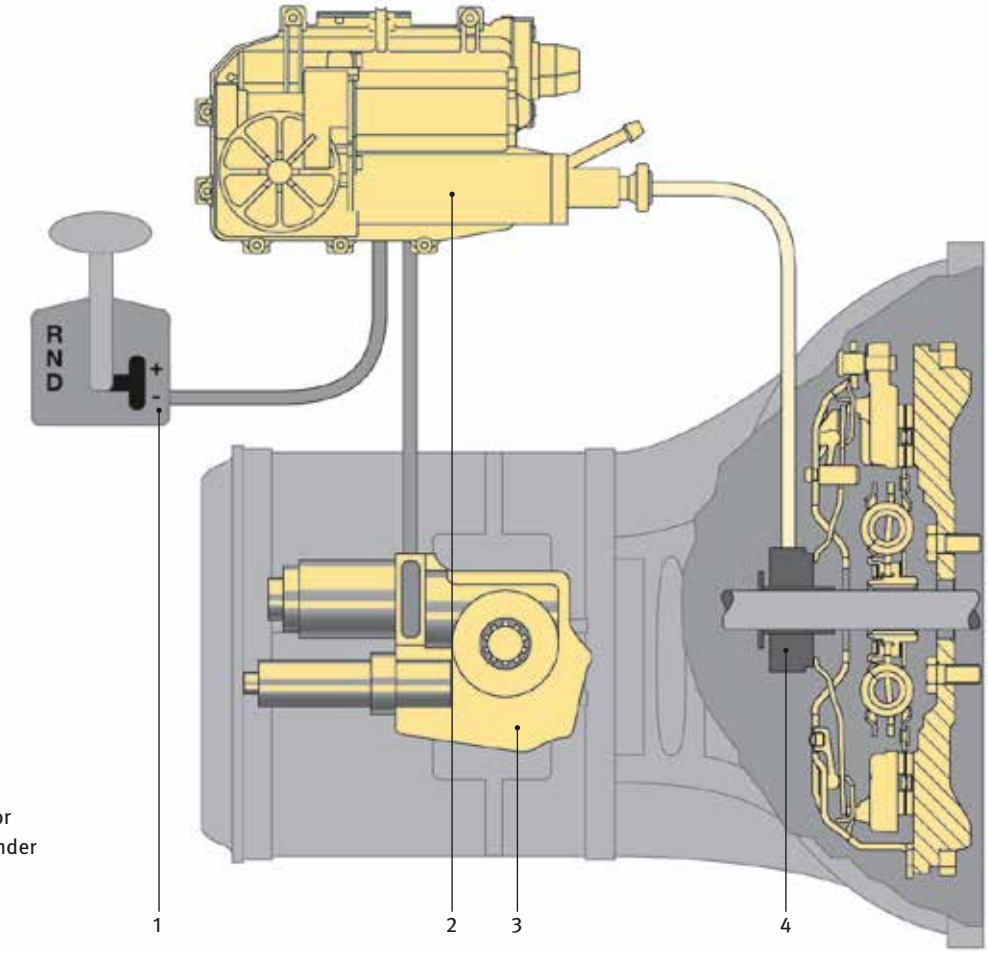

1 Selector lever
2 Clutch actuator
3 Transmission actuator
4 Concentric slave cylinder

Fig. 84

9 Double clutch transmission (DCT)

Since the torque converter automatic transmission has existed, its greatest benefit, shifting during driving mode, has been highly valued. However, compared to manual transmissions, automatic transmissions had a significantly worse efficiency record due to torque converter losses. Therefore, for some time engineers have been working on the development of a double clutch transmission (DCT). The objective was to combine the efficiency of a manual gearbox with the comfort of an automatic in a new type of transmission.

9.1 Basic principle

The DCT consists of two sub-transmissions that are located in one transmission housing but are independent of each other. Each sub-transmission is structurally designed like a manual transmission. It follows from this that each sub-transmission also has its own clutch assigned to it. Depending on the engine torque and mounting space, the clutches can be of either a wet or dry design.

While driving, all gear shift processes are regulated automatically. A control unit transmits the commands either to an electrohydraulic or electromechanical actuating mechanism. As a result, the clutches and gear shift forks can perform their work in a precisely defined time window. A sub-transmission is therefore always connected with the engine via a friction lock-up connection. In the other sub-transmission the next gear is preselected and is ready to be actuated. During driving the clutches are then activated alternately within milliseconds. For the driver this means, among other benefits, more driving comfort due to barely perceptible interruptions in traction during acceleration.

Representation of a double clutch transmission

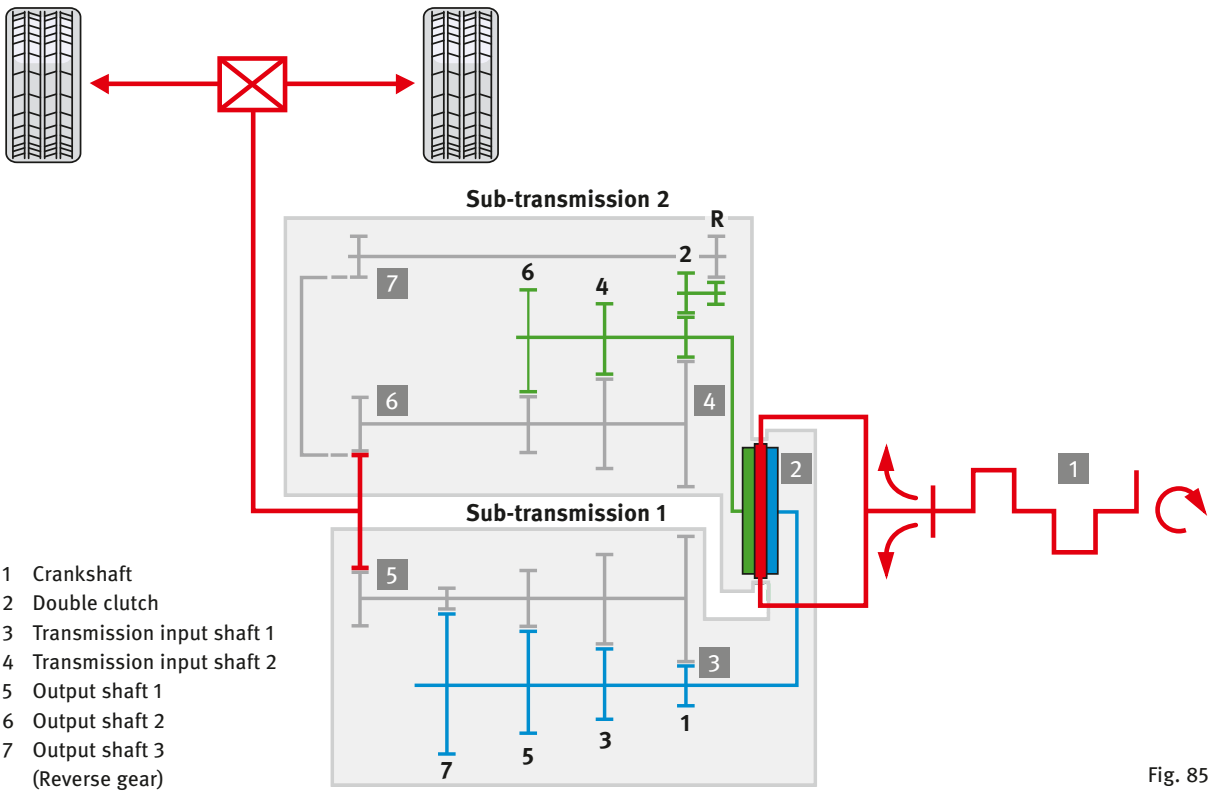

1 Crankshaft
2 Double clutch
3 Transmission input shaft 1
4 Transmission input shaft 2
5 Output shaft 1
6 Output shaft 2
7 Output shaft 3 (Reverse gear)

Fig. 85

9.2 Design

One of the main components of this transmission type is a dry double clutch, which must introduce the engine torque into both sub-transmissions. The clutches are arranged successively and drive the two interlocking transmission input shafts and their clutch discs. In contrast to a manual clutch, a double clutch is not incorporated together with the DMF on the crankshaft, but is mounted on transmission input shaft 2.

As already known from the LuK self-adjusting clutch, the double clutch also has an adjustment mechanism that compensates for the effects of clutch disc wear over time. For the controllability and adjustability of such a system, both the constant short actuation travels and the lower actuation forces over the entire life are of great significance.

An overview of all advantages of a double clutch system:

- Combines the comfort of an automatic transmission with the response characteristics of a manual transmission
- Similar properties to an automatic transmission, but with excellent efficiency
- Hardly perceptible interruption of tractive force during gear shift due to overlapping gearshift mechanisms
- Fuel saving
- CO_2 reduction

Dry double clutch (VW system)

Fig. 86

10 Continuously variable transmission (CVT)

Torque converter automatic, double clutch and manual transmissions have permanent gears that do not always allow the engine to operate within the optimal operating range. This can only happen when it is possible to vary continuously between the maximum and minimum transmission ratio. With the elimination of the gears, a significant gain in driving comfort and in driving performance is combined with simultaneously reduced consumption.

Since 1993 LuK has been involved with the development of components for continuously variable transmissions that use the so-called chain drive principle. Since then the transmitted engine torque of this system has risen continuously – with simultaneous improvement of driving performance and reduced fuel consumption.

CVT components

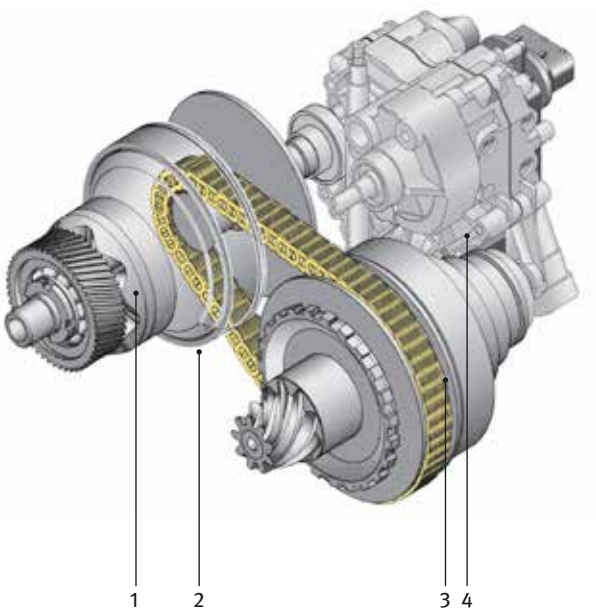

1 Primary pulley set
2 Link-plate chain
3 Secondary pulley set
4 Hydraulic control with pump

Fig. 87

In this principle, a link-plate chain runs between two pulley pairs, each of which consist of a so-called fixed disc and a displacement disc. The displacement disc is mounted so that it can be moved axially on the shaft with hydraulics. The axial displacement of the displacement disc is combined with a change of the running radius of the chain and therefore a corresponding transmission change. The torque is transferred analogously to the clutch by means of friction. It must therefore be ensured that the clamp loads acting on the pulleys are sufficiently large to reliably transfer the engine torque, but also to compensate for wheel-side torque shocks without the chain element slipping. The pulley sets are pressured and adjusted hydraulically in the process.

10.1 Design

In addition to the adjustment of the desired transmission, there is also a range of additional functions that must be ensured by the transmission. This includes, for example, the start-up function or the implementation of a reverse gear. Figure 88 shows the design of a CVT using the example of the Audi multitronic® system offered in various mass production models.

Furthermore, a planetary gear train with a forward clutch and reverse clutch is recognizable. This is a double planetary gear train, for which there is an equal transmission both forward and in reverse. In addition to the pressure and adjustment by hydraulic control, these functions are also represented by the corresponding clutches. In turn, the hydraulic system receives its commands from an electronic control system.

A wet multi-disc clutch was selected as the primary element for the Audi multitronic® system. However, hydrodynamic torque converters or hydraulic clutches can also be optionally used for CVT. The torque is transmitted to the primary pulley set via a gear wheel stage. This gear wheel stage allows the total reduction ratio to be adjusted to different engines. The primary pulley set is equipped with a dual stage torque sensor. The pulley sets are realized with the so-called double piston principle, i.e. with separate cylinders for the pressure and adjustment function. A link-plate chain is located between the two pulley sets. The secondary pulley set is built directly on the pinion shaft, which in turn drives the ring gear. From there the torque is transmitted via the differential to the flanges on the vehicle's drive shafts. For a hydraulic system with an electronic control system, the pump can be implemented as an internal gear pump or vane cell pump.

Audi multitronic®

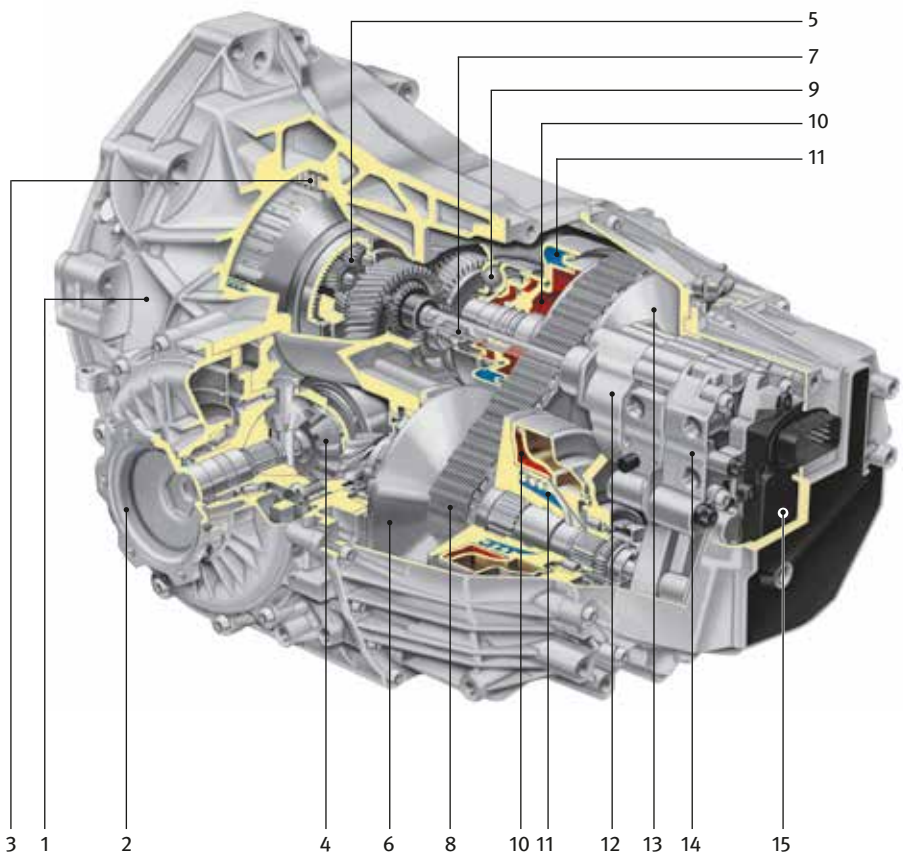

1 Light metal housing
2 Power take-off
3 Multi-disc clutch
4 Differential
5 Reversing planetary gear set
6 Secondary pulley set
7 Pump drive
8 Link-plate chain
9 Torque sensor
10 Pressure spaces
11 Adjustment spaces
12 Pump
13 Primary pulley set
14 Hydraulic control
15 Electronic control unit

Fig. 88

10.2 The continuously variable, friction lock-up power transfer

A continuously variable, friction lock-up power transmission can only work reliably if sufficient pressure can be ensured in all operating states. The optimal operating state is always a tightrope walk between a slipping link-plate chain and poor efficiency due to overpressure. Of particular significance in this connection, in addition to the variable engine torque, is the erratic introduction of torque from the wheel, e.g. ABS brake activation caused by ice on the road, or spinning the wheel off a kerb to the road level, which are associated with very high speed and torque differentials. These challenges are solved by using a hydrodynamic dual stage torque sensor.

Continuously variable friction lock-up power transmission

F_{ZT}: force on driving side
F_{ZT}: force on slack side

F_2: axial force on the secondary pulley set
T_1: input torque

i_{Var}: variator transmission

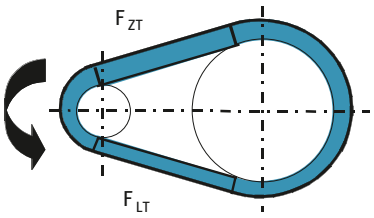

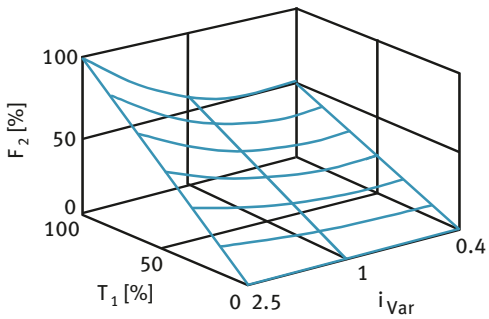

Fig. 89

10.3 Link-plate chain

PIV (positive infinitely variable) is the English designation introduced by the Englishman G. J. Abott for the mechanically adjustable variable transmission he invented in 1924. German-born Werner Reimers (1888–1965) bought the patent and, in 1928, founded the English-German transmission company in Bad Homburg vor der Höhe, which – solely owned by him since 1931 – was renamed P.I.V. Antrieb Werner Reimers KG in 1936.

Based on a rocker-pin chain design from P.I.V. Antrieb Werner Reimers KG, the link-plate chain was consistently refined for automotive applications. The focus was, and remains, taking measures to increase stability for maximum power transmission and optimizing acoustic behavior.

CVT transmissions are a fixed component in the automotive world, where the current focus clearly lies in Asia. Emanating from these markets and borne by new, interesting applications, a further increase in market share is expected for the future. The CVT cannot ignore current requirements for further improvement of efficiency. However, to be successful here, it is necessary to examine the entire system comprehensively.

It becomes apparent that even current CVTs – particularly in combination with pressure systems that are built on the dual stage torque sensor – still have adequate potential for optimizations with regard to efficiency. Compared to manual transmissions, further savings of more than 5% are realistic.

Properties of the link-plate chain:

- Due to the low-friction rocker joint design, with which small running radii on the pulleys and therefore a high gear ratio spread are achieved, low consumption and outstanding driving dynamics are possible
- High torque levels can be transmitted with a link-plate chain. Due to design adaptations, the distribution of the stress in the chain can be optimized
- The design reduces internal frictional losses as a result of the motion generated by the rocker pins and this guarantees good efficiency
- In connection with the crowned pulleys, the convex faces of the rocker pins and the link-type design reduce misalignment during adjustment
- Furthermore, the link-plate chain is not susceptible to deformations of the pulley set during driving mode, angular misalignment or relative torsions between the fixed and movable pulley

Link-plate chain

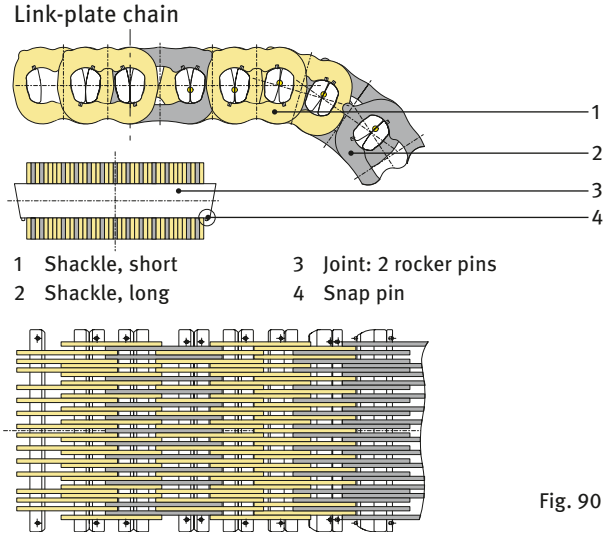

1 Shackle, short
2 Shackle, long
3 Joint: 2 rocker pins
4 Snap pin

Fig. 90

Figure 90 shows the link-plate chain for applications up to approx. 300 Nm torque. It consists of different link plates, which form a unit with the rocker pins and the locking elements.

Link-plate chain with pulley set

Fig. 91

11 Torque converter

11.1 Design

The torque converter, or Föttinger torque converter, serves as a hydrodynamic transmission. It was originally developed by the engineer Hermann Föttinger for marine propulsion systems and also later used in automobiles and locomotives.

Today, special Trilok torque converters serve primarily as a start-up element in vehicles with automatic transmissions.

The main components of a torque converter are:

- Impeller (securely connected to housing)
- Shroud impeller (securely connected to main transmission shaft)
- Stator wheel with one-way clutch

11.2 Function

In principle, the torque converter hydraulically transmits engine torque to the transmission input shaft. The pump, and therefore the entire torque converter housing, is connected with the engine in a torque-proof way, or the turbine is connected to the transmission input shaft via hub splines in a torque-proof way. The entire torque converter is filled with transmission oil. Blades are installed in the pump and the turbine. These cause a circular oil flow between the pump and turbine in the case of a slip speed differential. Oil is drawn in from the inside diameter of the pump and pressed outward by centrifugal force. Then the oil is centrifuged out of the pump into the turbine and redirected there by the turbine blades, which causes a torque to be generated in the turbine or transmission input shaft.

During start-up, or at high differential speeds between the pump and turbine, the oil flow in the turbine is redirected so that the stator would have to turn in reverse. However, a one-way clutch is installed in the stator, which causes it to be stopped by the stator shaft during reverse rotation. As a result, a stator torque is generated, which due to the balance of moments in the torque converter causes the transmission input shaft torque to increase by up to a factor of 3 compared to the engine torque. The efficiency of the torque converter is therefore particularly great, especially in start-up situations. It must be taken into account that the hydrodynamics of the torque converter can only transmit torque in case of a slip speed differential between the pump and turbine. Therefore, once the speeds in the pump and turbine are equal in running drive operation, a lock-up clutch engages, which is hydraulically controlled by the transmission. The slippage is eliminated and there is no power loss during operation of the torque converter, which consequently reduces fuel consumption.

Torque converter

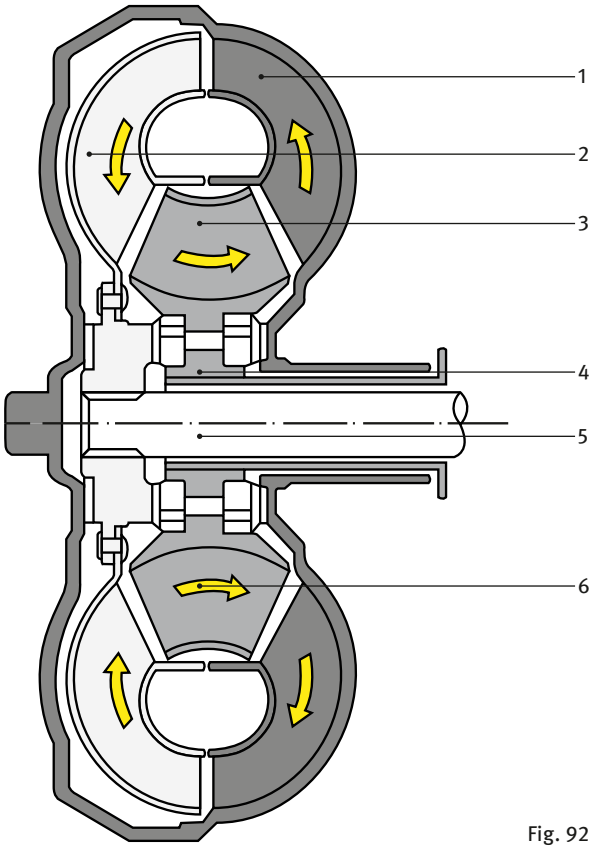

1 Impeller
2 Shroud impeller
3 Stator
4 Stator shaft
5 Transmission input shaft
6 Oil flow

Fig. 92

11.3 Torsional damper

As a torque converter can in principle only transfer torque with slippage, its operation always involves power loss. In order to avoid this situation, torque converters are equipped with a lock-up clutch. This is activated via the transmission control depending on the driving situation.

As soon as the lock-up clutch is closed, engine torsional vibrations are transmitted to the powertrain. These can cause noises or vibrations.

A solution to this is provided in the form of specially tuned, high-performance torsional dampers that compensates for existing vibrations through targeted damping and adjustment of the spring rates. Depending on the concept, slippage can be avoided to a broader extent than with conventional dampers thanks to the use of a turbine torsional damper, as well as special dual damper systems as well as in conjunction with centrifugal pendulum-type absorbers.

Another way of compensating for vibration is to control operation with low slippage. In this case, rotational irregularities are reduced through friction in the lock-up clutch. Innovative cooling technology protects the friction lining from high temperatures and ensures a long life.

Hydraulic torque converter with lock-up clutch

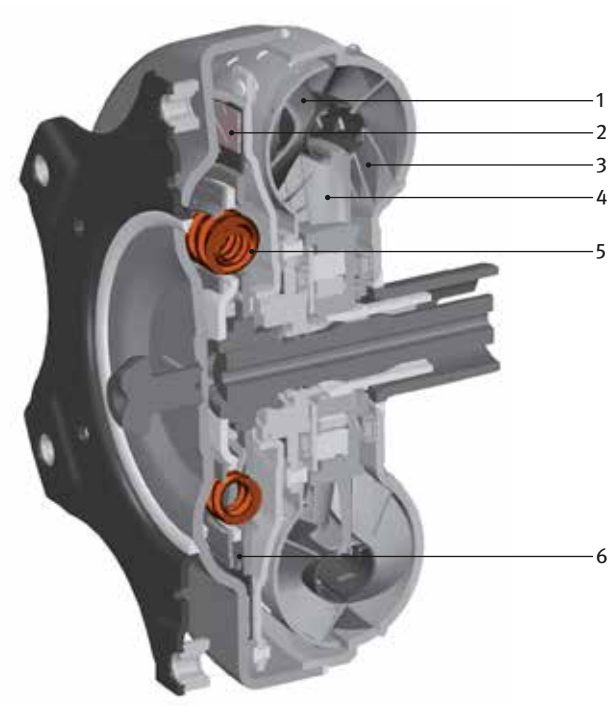

1 Turbine
2 Friction lining
3 Pump
4 Stator
5 Torsional damper
6 Lock-up clutch with torsional damper

Fig. 93

Hydraulic torque converter with expanded damping system

Fig. 94

12 General notes

Lubrication
When it comes to the clutch and release system, the message "less is more" basically applies. Thanks to modern materials, additional lubricants are no longer essential. However, there are still some older systems on the market that must be provided with lubricant at precisely defined points. The choice of medium depends on the information provided by the vehicle manufacturer. In the absence of any specification, a temperature and age resistant high-performance grease with MoS_2 (e.g. Castrol Olista Longtime 2 or 3) can be used. Professional greasing of the transmission input shaft and the clutch disc hub is recommended as follows:

- Apply grease to the clutch disc hub and gearing of the transmission input shaft
- Guide the clutch disc onto the transmission input shaft in three different angular positions, and then remove
- Remove excess lubricant from the hub and shaft

Note:
Chemically nickel-plated hubs (recognizable from the slightly silvery sheen of the surface) must not be greased!

Solid flywheel
When replacing the clutch, it is advisable to check the friction surface of the flywheel for wear marks, such as scores, hot spots or discoloration. It is crucial that these traces are removed, since they impair the function of the new clutch. The rework, i.e. the grinding/truing, must remain within the tolerances specified by the vehicle manufacturer. It is important to ensure that the clutch mounting surface is finished to the same dimensions as the contact surface. At the same time, the ring gear should also be visually inspected. The mounting screws must be replaced each time they are loosened.

Dual mass flywheel (DMF)
- DMFs that have fallen out must not be remounted, since the bearing race will have been damaged as a result of the drop
- The friction surface of the DMF must be degreased before the clutch pressure plate is installed. A cloth moistened with degreasing agent is used for this purpose. Direct contact with the cleaning agent (parts washer, high-pressure cleaner, compressed air and cleaning spray) is not permitted
- Observe distance between rotational speed sensor and DMF transmitter pins
- The sensor ring for detecting the engine speed must be checked for damage
- Post-treatment of the DMF friction surface is not permitted
- Using mounting screws that are too long for the clutch pressure plate will block the DMF. This will cause noises or damage to the powertrain components. It is also important to ensure that the dowel pins are not pushed in, as this will similarly lead to the complaints mentioned above
- In the case of DMFs with plain bearings, the secondary flywheel must not be moved in an axial direction with excessive force, i.e. not using a lever or screwdriver
- It is crucial that new bolts are used to mount the DMF where necessary, as they extend during installation

Pilot bearing
Unobtrusive and small, but extremely effective in the event of a malfunction: The pilot bearing, also known as the guide bearing, guides the transmission input shaft and is therefore essential to clutch functionality. The pilot bearing should be inspected, and if necessary changed, whenever the clutch is replaced.

Rotary shaft seals
Even slight traces of oil and grease significantly impair the function of the clutch. Traces on the bell housing bell or on the clutch itself indicate leaks. With older, high-mileage vehicles, the rotary shaft seals around the clutch should generally be replaced.

Clutch disc
Lightweight construction in cars also applies to the clutch disc. Weight-optimized discs react to rough treatment with lateral runout. It is therefore advisable to check lateral runout prior to installation if the packaging is missing or damaged. The maximum permissible lateral runout is 0.5 mm.

Centering
The centering of the clutch disc is key to the correct installation of the transmission and to the clutch function. Centering ensures that the transmission input shaft can be smoothly guided through the hub profile of the clutch disc during installation. This prevents risk of damage to the clutch disc or to the hub profile. To permit centering on as many vehicle types as possible, Schaeffler Automotive Aftermarket has developed a universal centering mandrel. This is a component of the Special Tools set, part. no. 400 0237 10.

Fitting sleeves
When the engine and transmission are joined together, component tolerances can converge and, in unfavorable combinations, cause radial offset. The rotational axes of the crankshaft and transmission input shaft are not on the same plane. This inevitably leads to noise and increased clutch wear. In order to guarantee the optimum position of the transmission during installation and thereby minimize offset, fitting sleeves are used. It is therefore essential to ensure, prior to installing the transmission, that no fitting sleeves are damaged.

SAC Special Tools set

Fig. 95