inno. TR167 Installation Instructions

ADVANCED CAR RACKS

Please read both the Stay installation instructions and INNO common installation instructions (both included in Stay package).

Keep this installation instructions in a safe place.

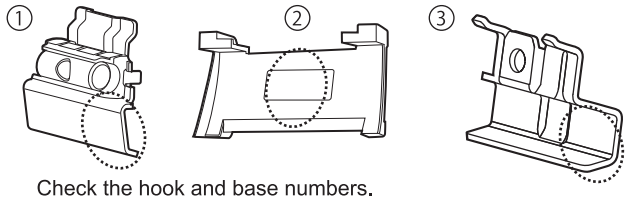

Check the hook and base numbers.

	No.
①	811
②	A01
③	712

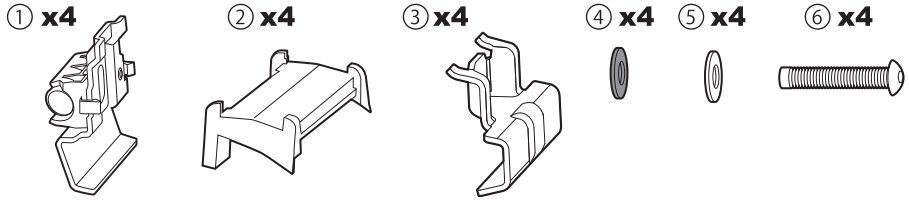

No.	
①	Inner hook
②	Base
③	Outer hook
④	Washer
⑤	Nylon washer
⑥	Bolt

We do not accept any liability for accidents, damage or injury caused by incorrect installation or use, modification, or natural disaster.

TR167 Mounting Method by Vehicle Type

Manufacturer	Model	Type	Year	Maximum loading capacity
VOLVO	V90		2018 -	165lbs (75kg) / 165libras (75kg) / 165libras (75kg) ※

※ Load + Base rack + Attachments

Recommended mounting position

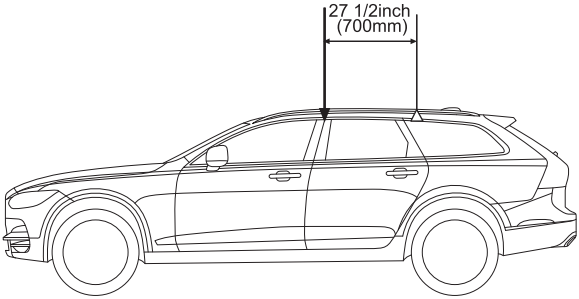

Stay interior dimensions		
	Ⓦ	Ⓐ
Front	32 3/8inch (822mm)	16 1/8inch (411mm)
Rear	31inch (788mm)	15 1/2inch (394mm)

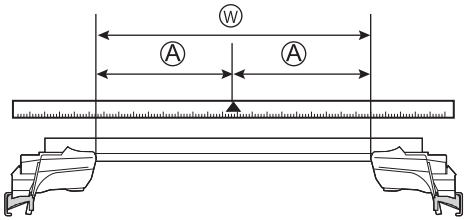

If not using the recommended mounting positions, follow the Stay installation instructions.

Detailed installation diagram

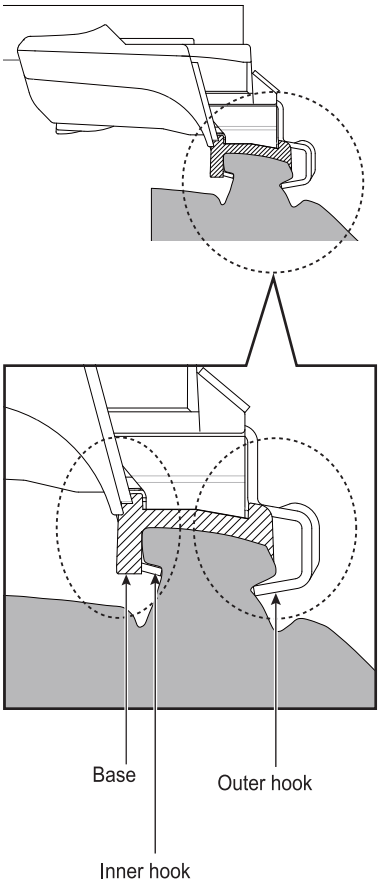

Rely on premium roof racks and cargo carriers by INNO if you're looking for quality and efficiency.