10580 (0 - 6 - T - PS)

10587 (0 - 6 - T - PS)

INSTALLATION INSTRUCTIONS

5" FUSION RUNNING BOARD
1000 SERIES 5" RUNNING BOARD

Universal

Parts List

Item	Qty.	Code	Description	Max. Torque
1	1 Set	105870AA-0BA	5" Running Board (Driver & Passenger).	-
2	**1 Kit**	**BRK-10587**	**Hardware bracket**	**-**
3	6 Piece	105872AA	U Bracket	-

Required Tools (Not included)

Qty.	Description
1	1/2" Socket
1	Extension to ratchet
1	Ratchet

Product Image

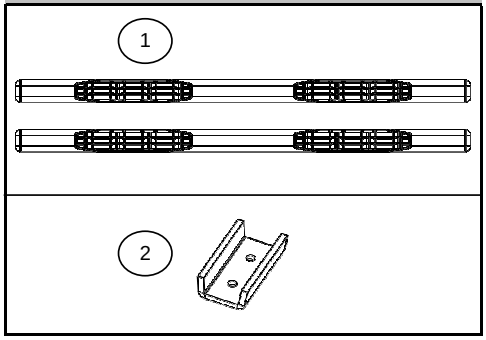

Instructions

1.- Before beginning the installation, please read all directions carefully and verify that all necessary hardware is accounted for. If any parts are missing, stop the installation and contact your distributor immediately.
2.- To maintain and care this product keep it clean and do not use abrasive cleaners or polish waxes. We recommend to use only non-abrasive automotive wax such as pure carnauba to avoid scratches and rust.
3.- Once the main brackets are installed **(sold separately),** the approximate installation time is 15 min.
4.- Place the U brackets inside the Running Board. Move them to align to the main brackets. **See illustration 1.**
5.- Place the 5/16" flat and lock washers with the 5/16 x1" hex head bolts. This hardware kit is included on the main brackets that are **(sold separately). See illustration 1.**
6.- Align the Running board an tighten the bolts using a 1/2" wrench.
7.- Periodically check your product because it may need a re-tighten of bolts.
8.- Fill the warranty card and place it inside your vehicle's glove box.

ILLUSTRATION 1.

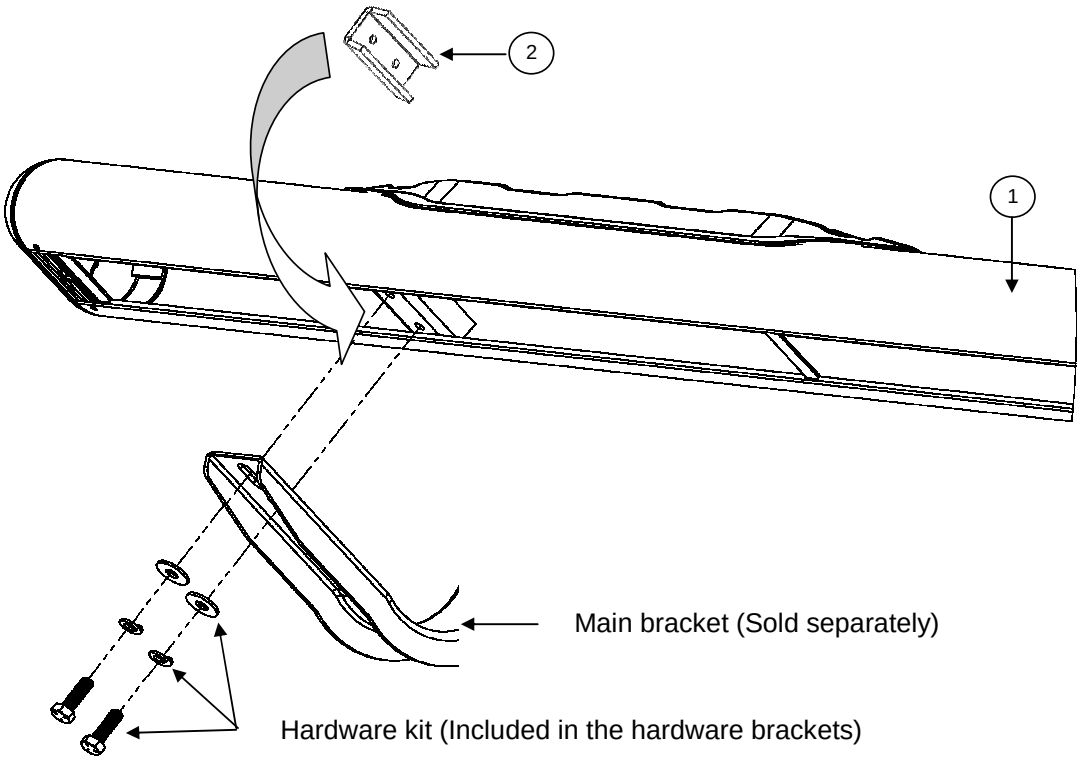

Looking for dependable running boards and step bars? Rely on Go Rhino for quality and long-lasting products.