68.039

FITTING INSTRUCTION
"Steel"

= 15 min.

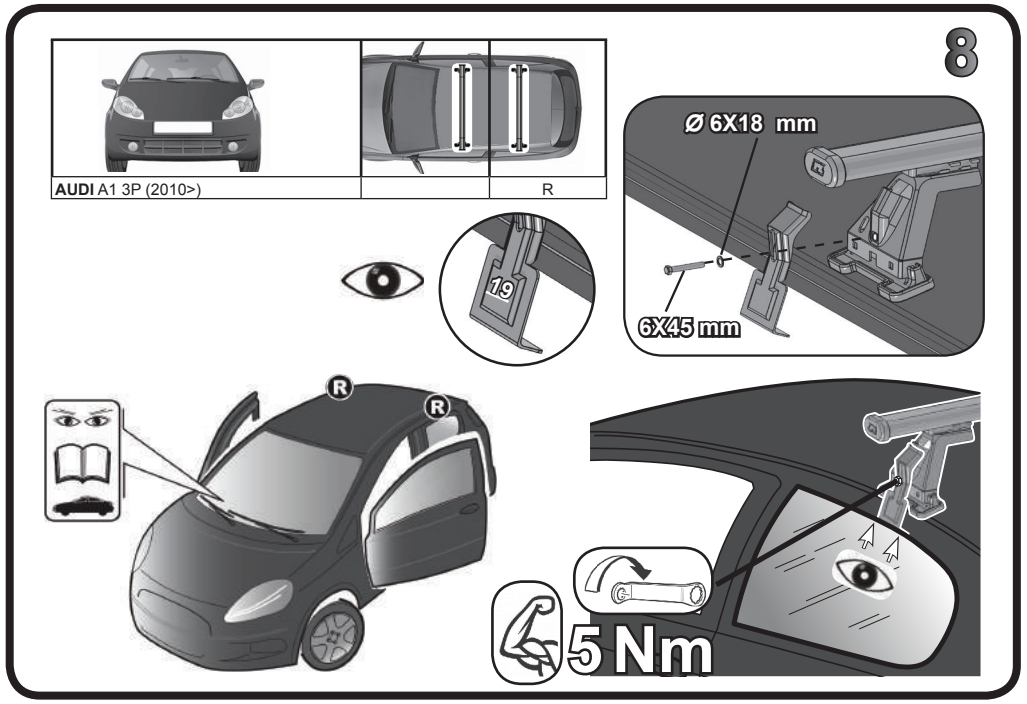

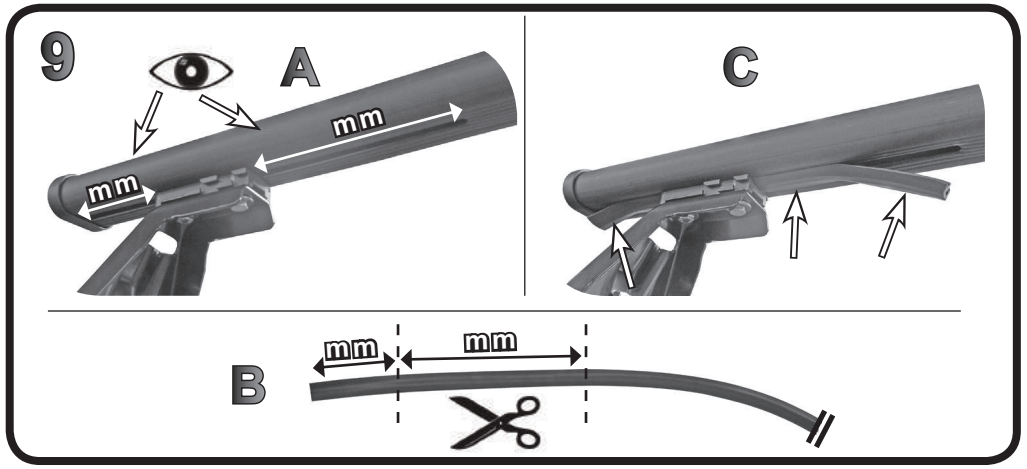

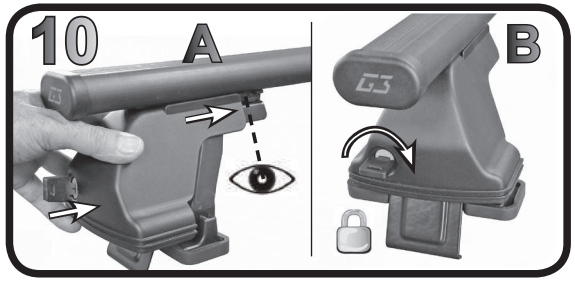

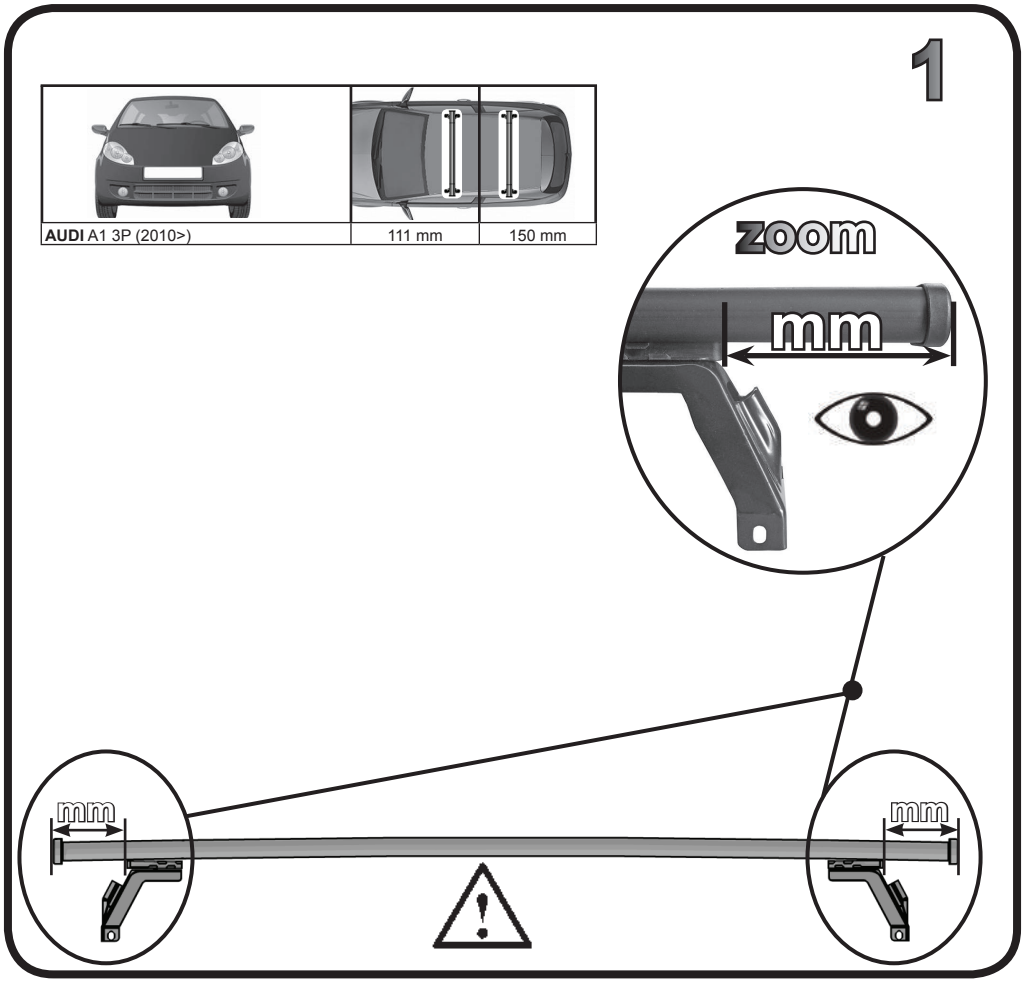

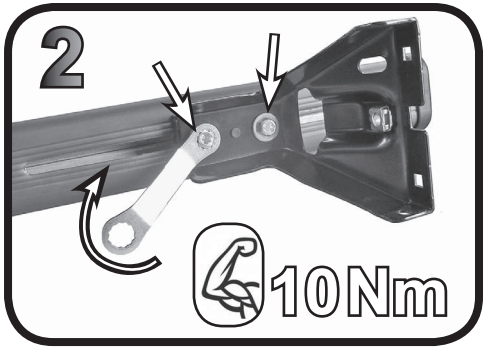

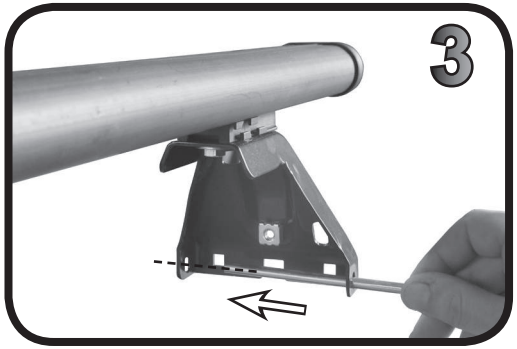

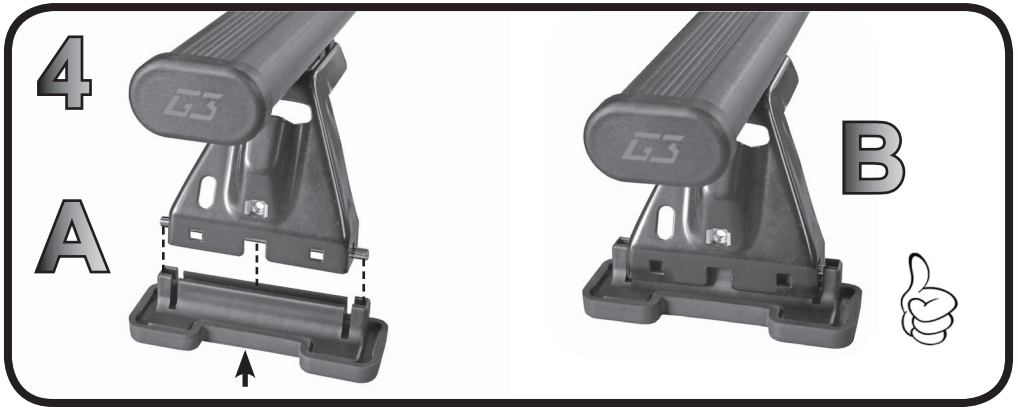
4
A
B

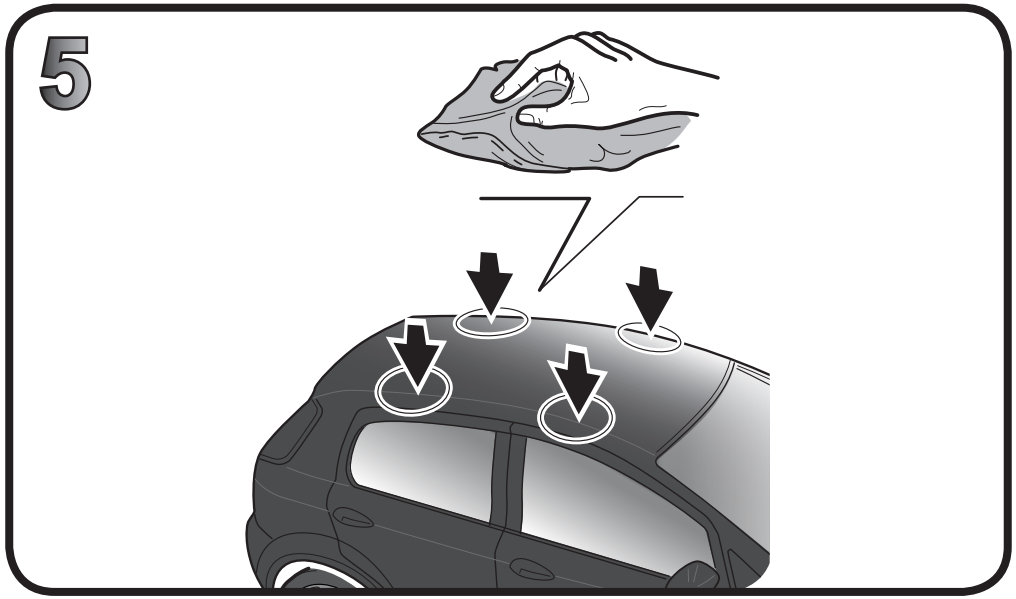
5

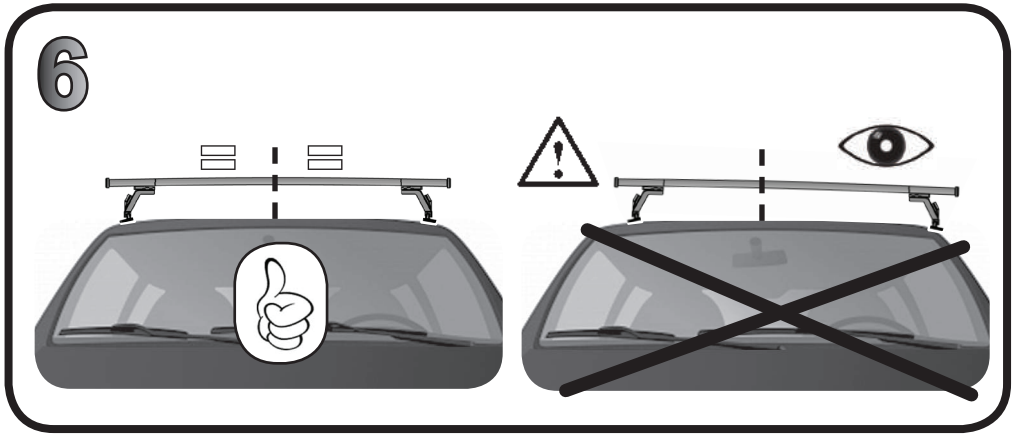
6

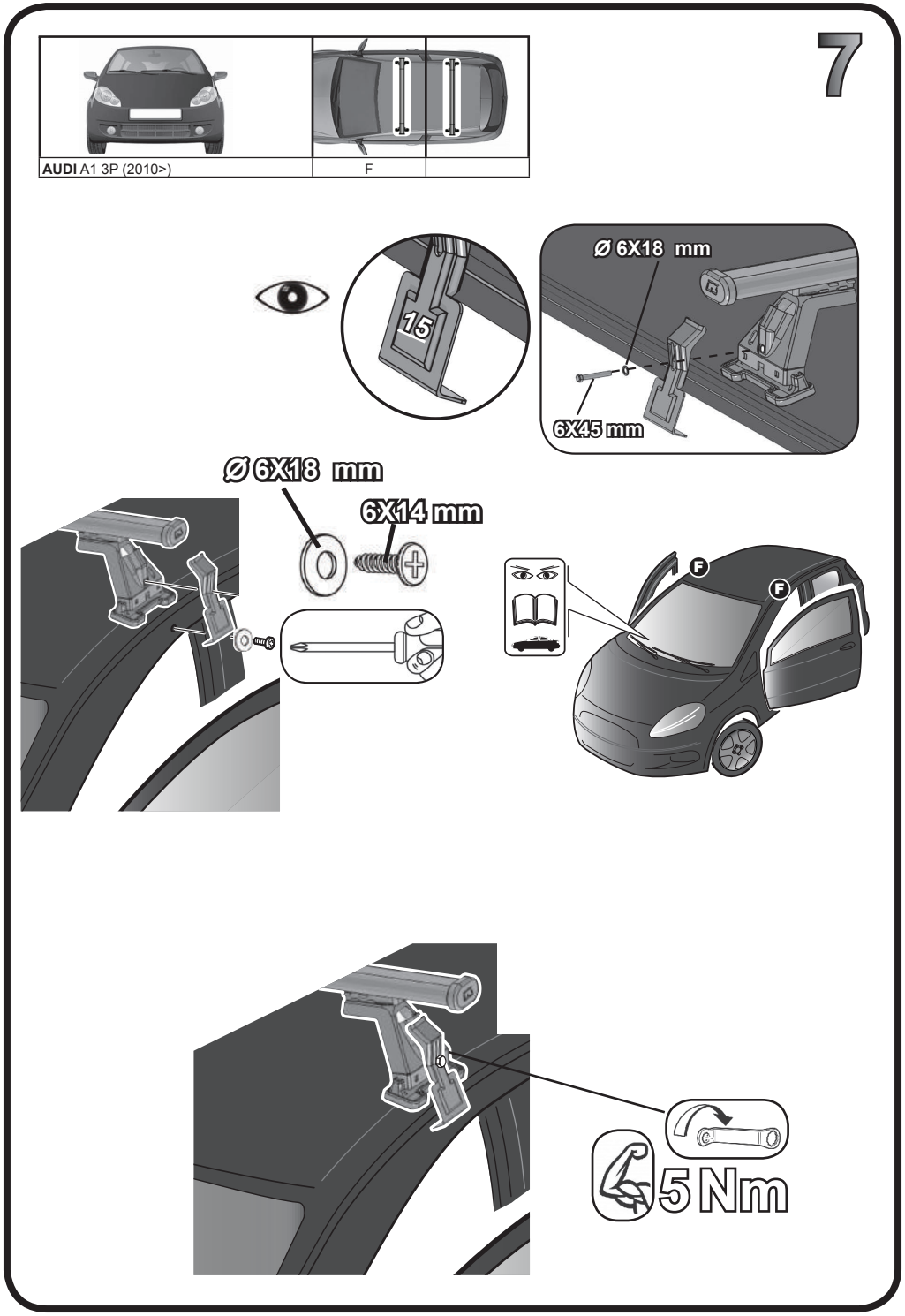
7
AUDI A1 3P (2010>)
F
15
Ø 6X18 mm
6X45 mm
Ø 6X18 mm
6X14 mm
F
F
5 Nm

68.039

FITTING INSTRUCTION
"Aluminium"

= 15 min.

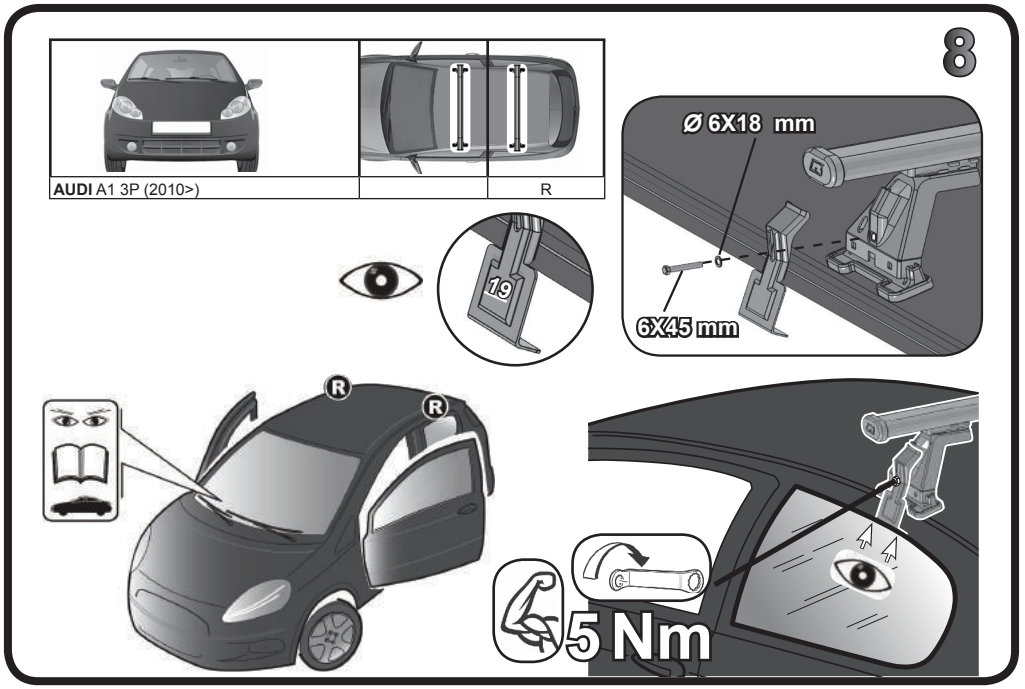

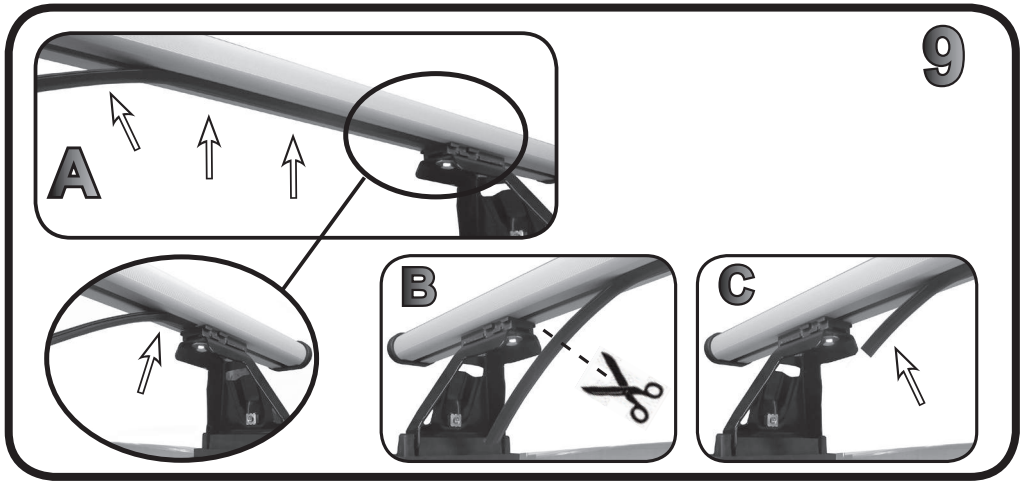

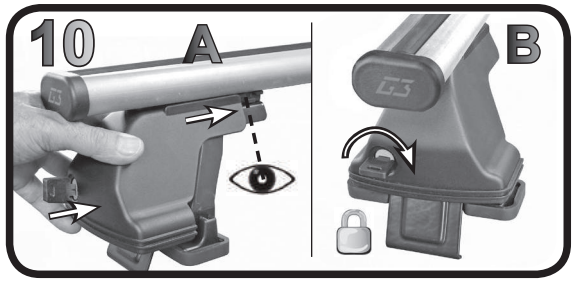

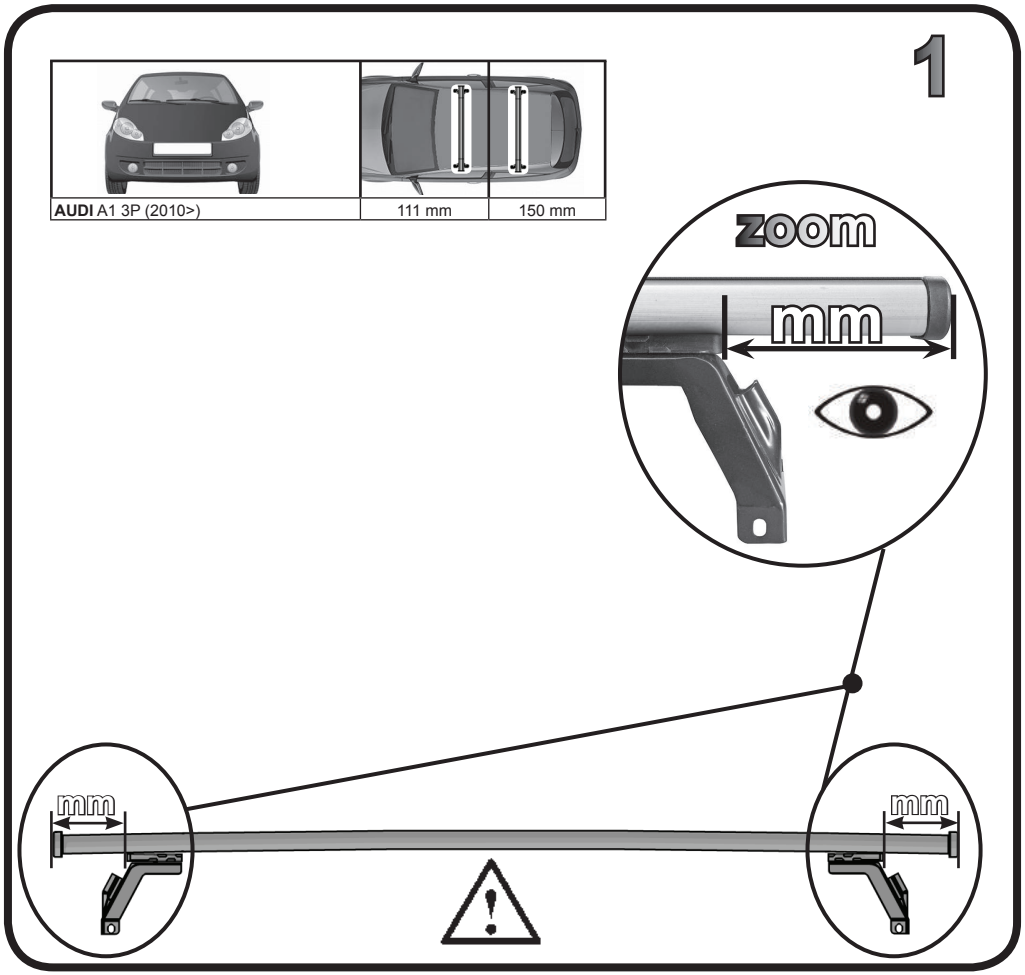

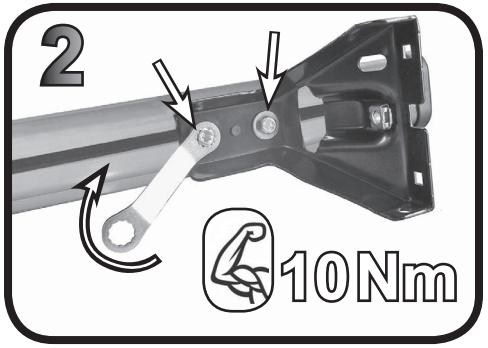

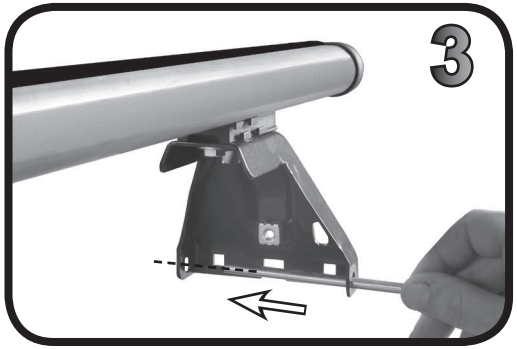

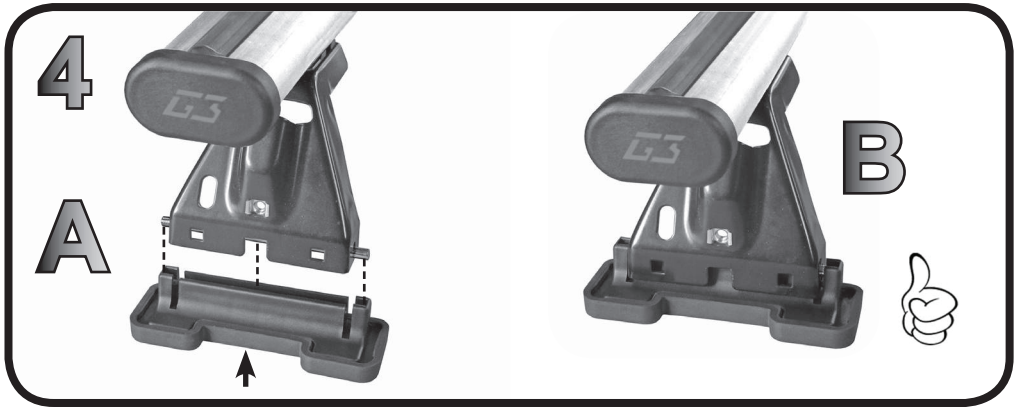

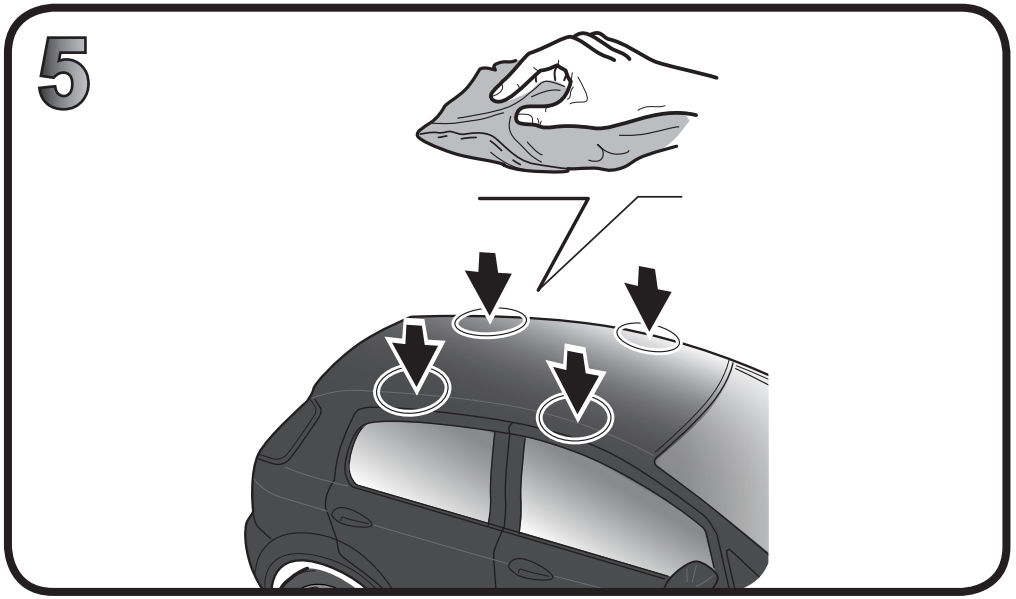

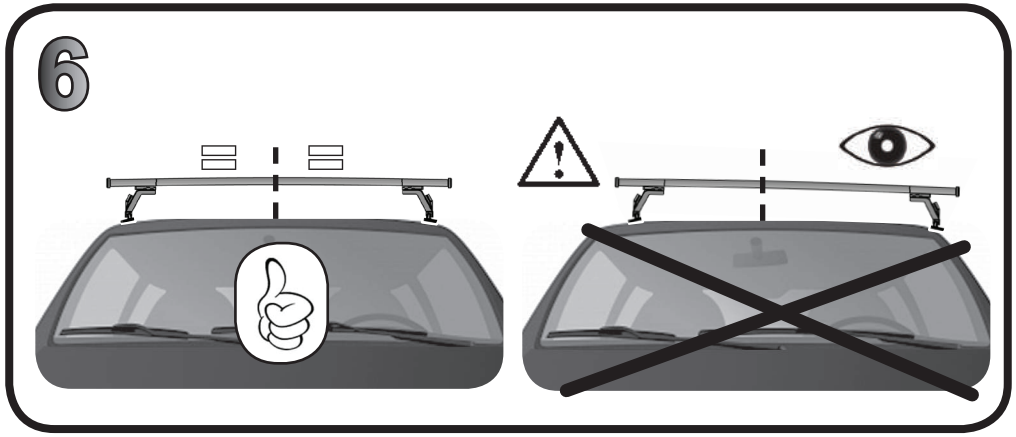

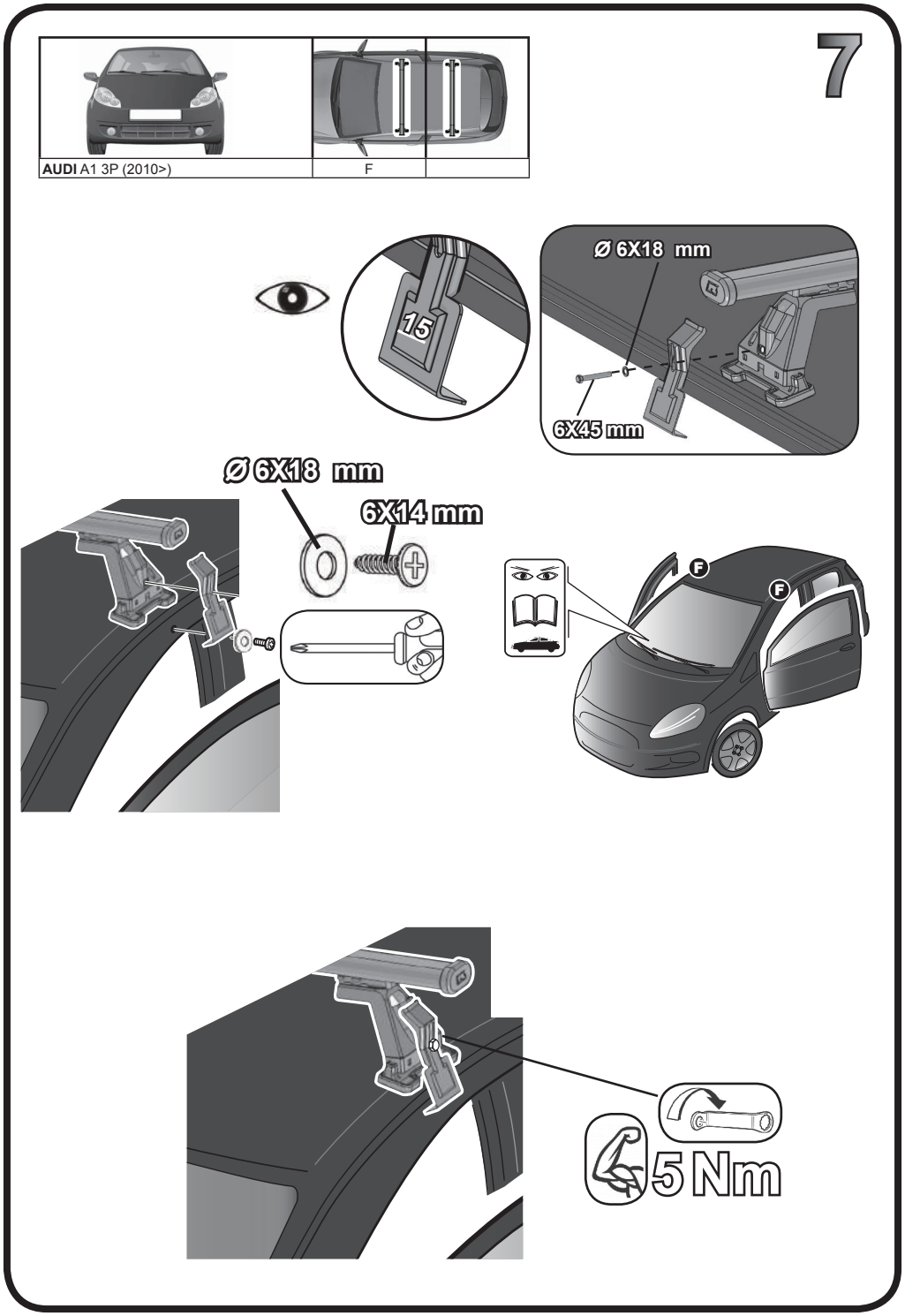

Learn more about Roof Racks on our website.