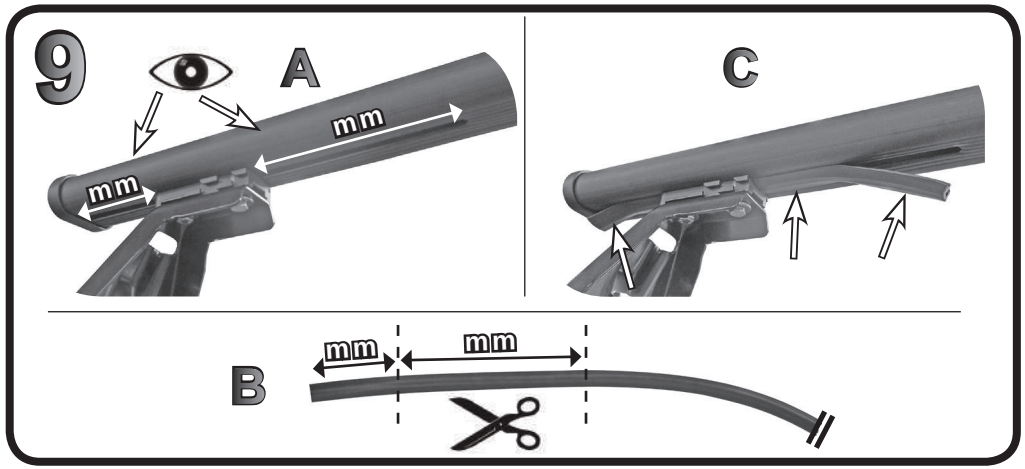

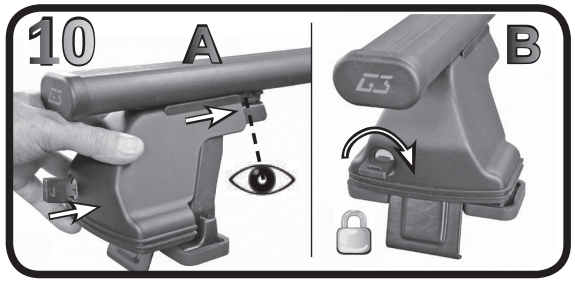

68.034

FITTING INSTRUCTION
"Steel"

= 15 min.

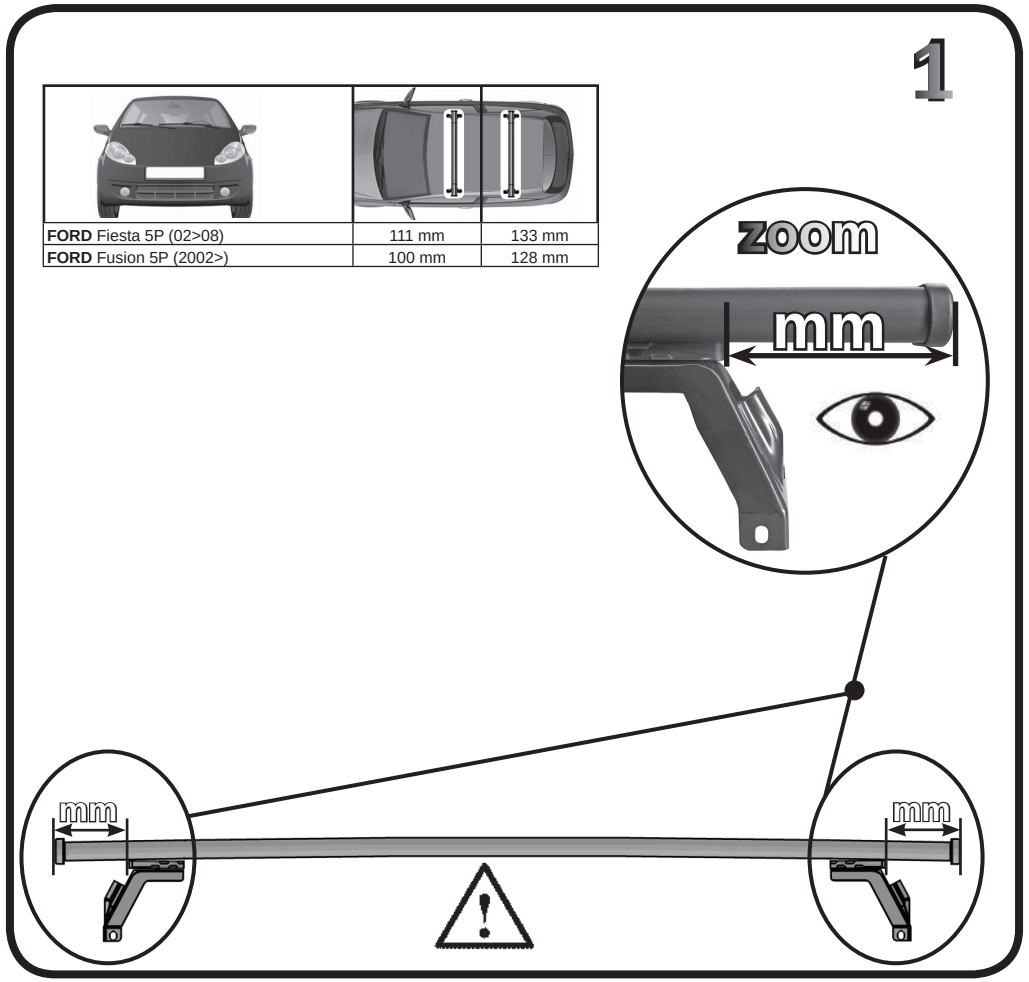

FORD Fiesta 5P (02>08)	111 mm	133 mm
FORD Fusion 5P (2002>)	100 mm	128 mm

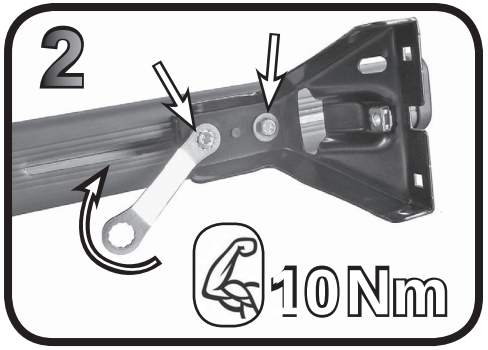

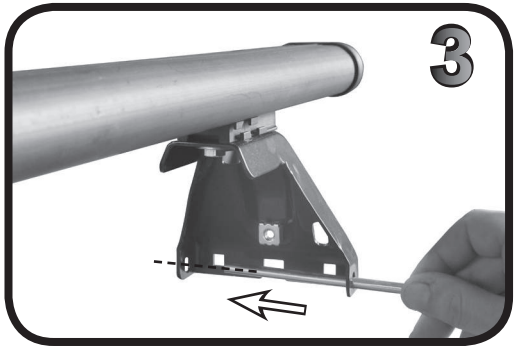

4

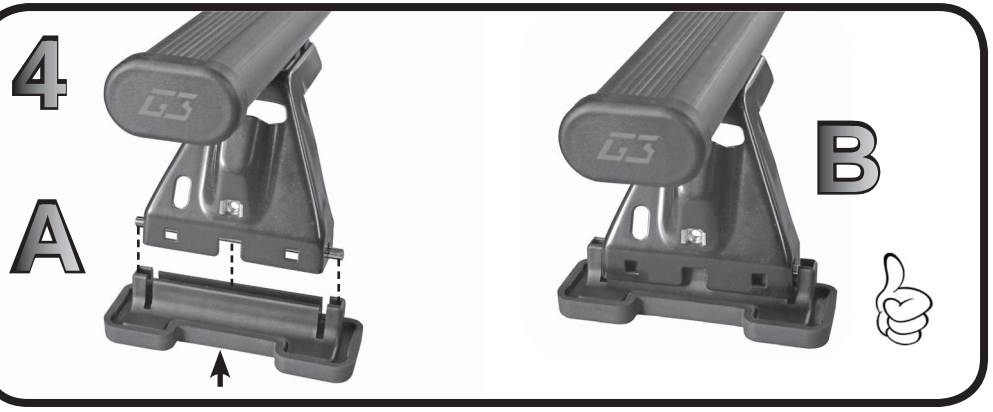

5

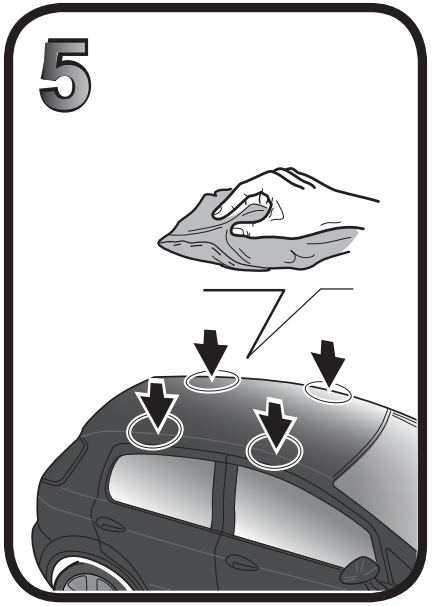

6

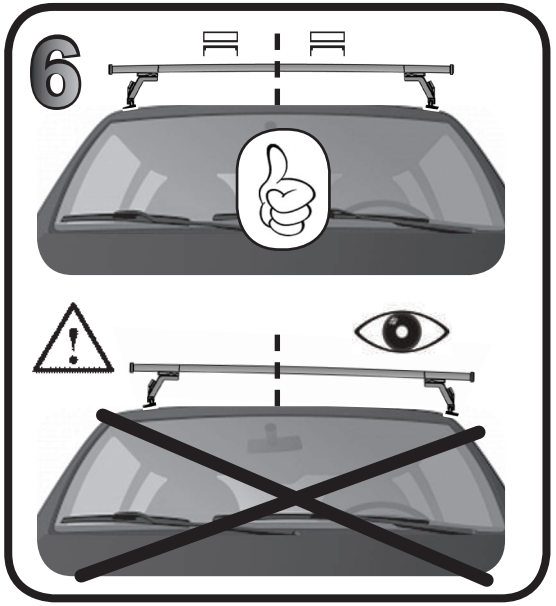

7

FORD Fiesta 5P (02>08)	04	23
FORD Fusion 5P (2002>)	04	23

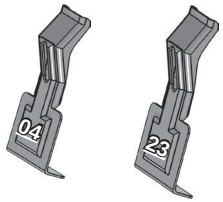

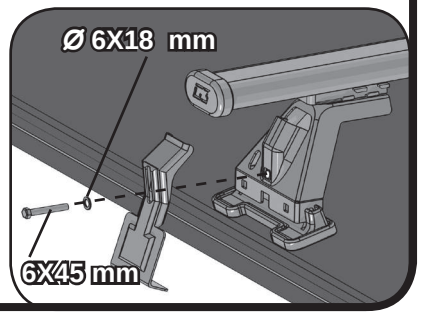

8

FORD Fiesta 5P (02>08)	F: 250 mm	R: 450 mm
FORD Fusion 5P (2002>)	F: 250 mm	R: 450 mm

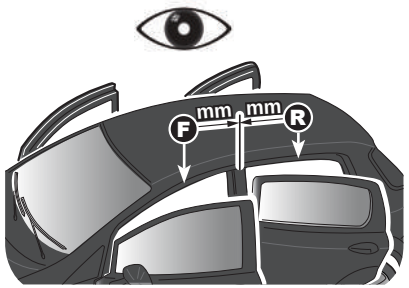

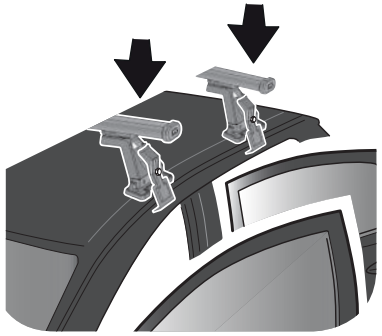

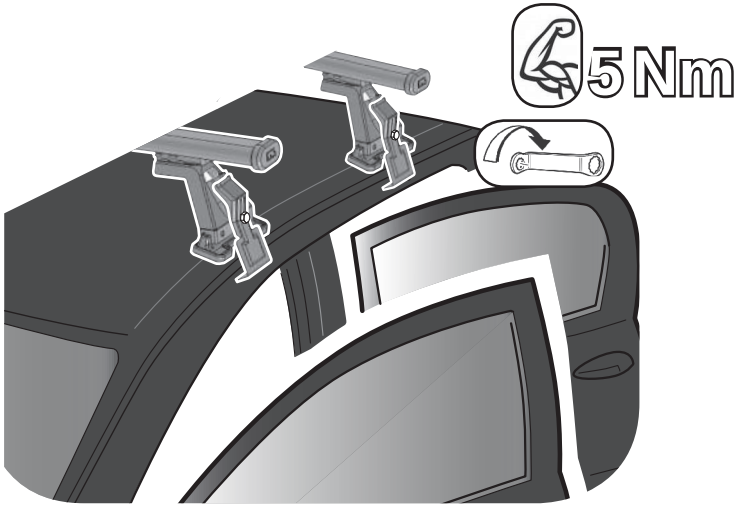

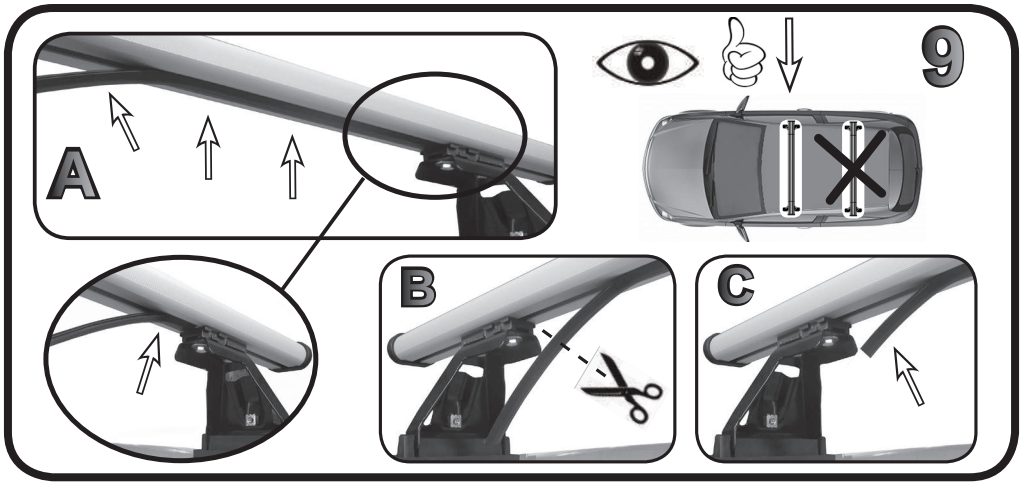

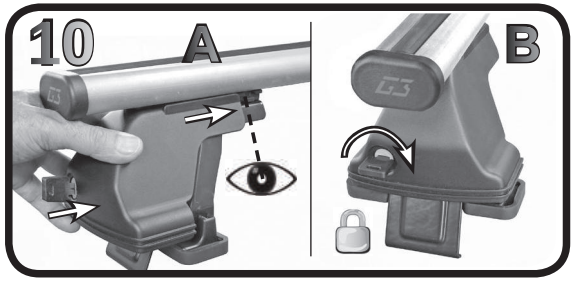

68.034

made in italy

FITTING INSTRUCTION
"Aluminium"

= 15 min.

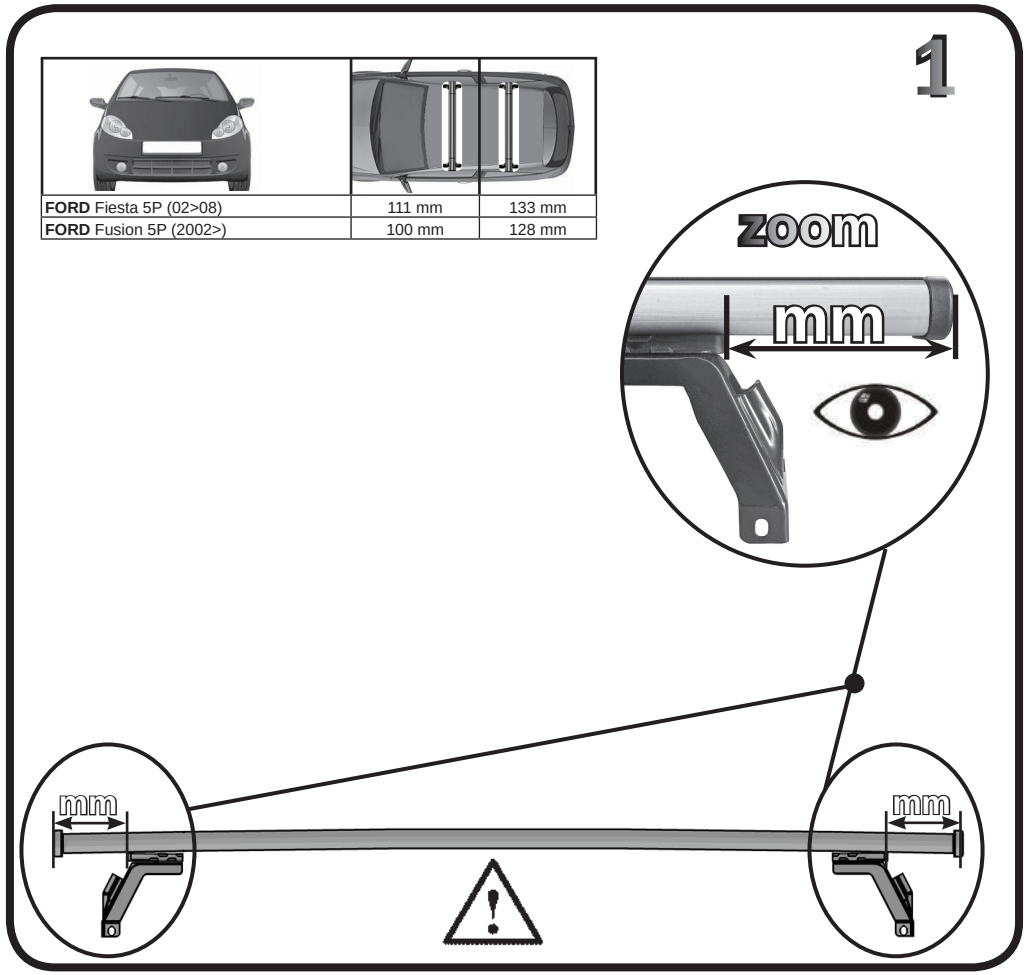

FORD Fiesta 5P (02>08)	111 mm	133 mm
FORD Fusion 5P (2002>)	100 mm	128 mm

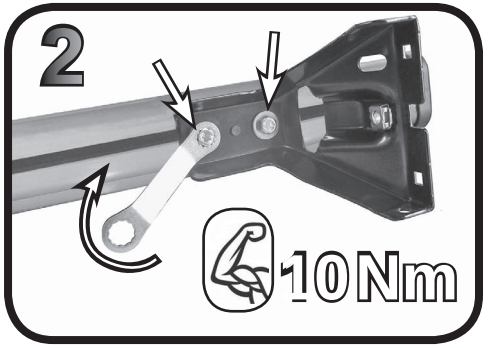

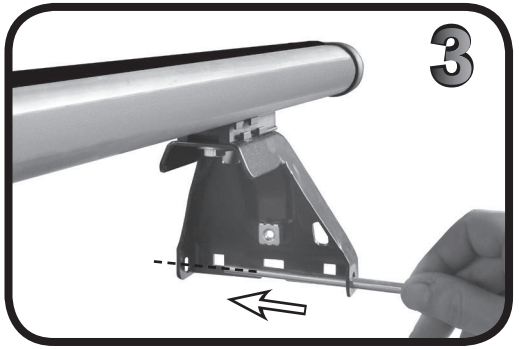

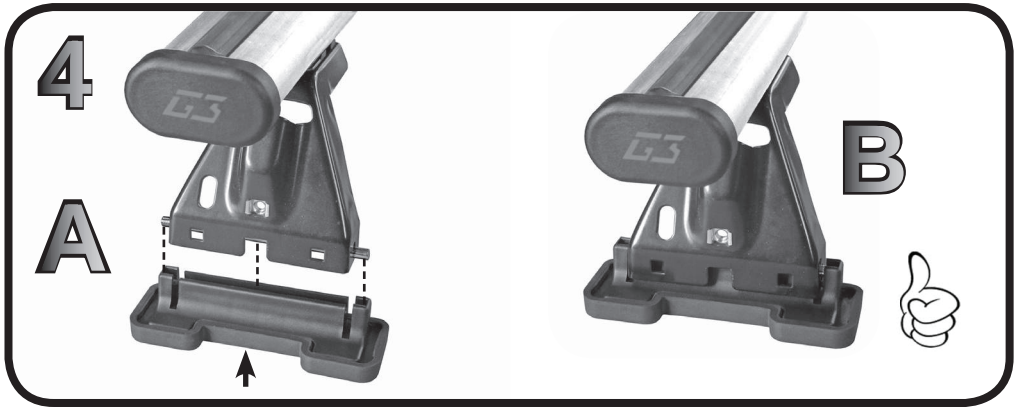

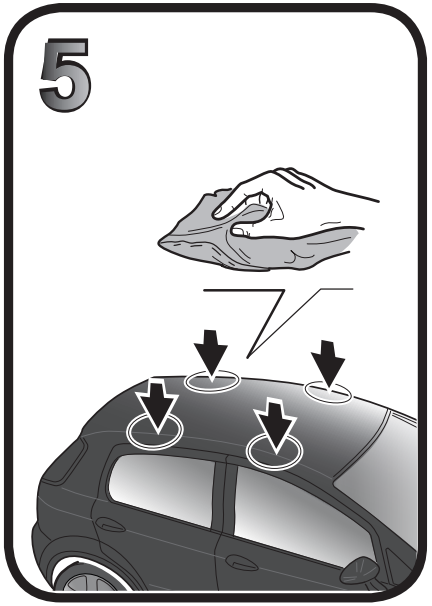

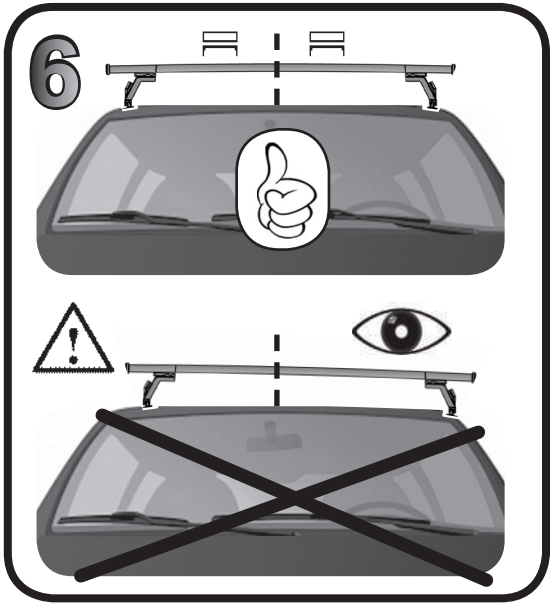

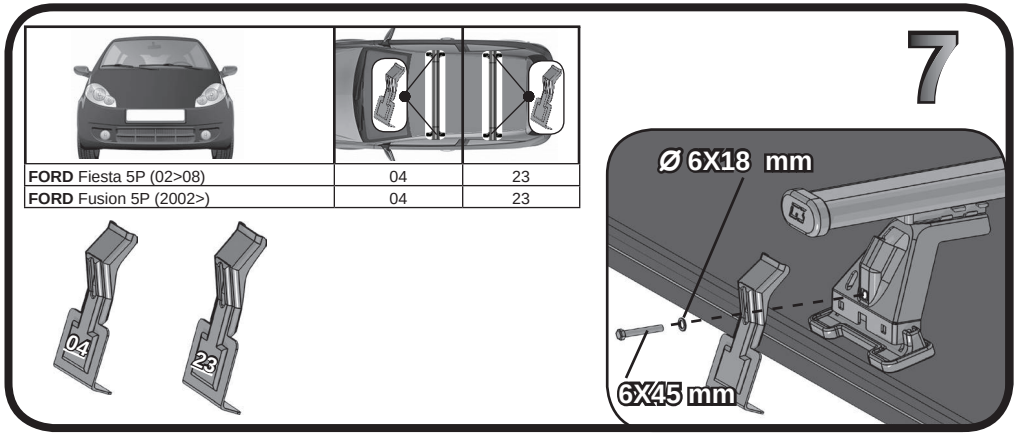

FORD Fiesta 5P (02>08)	04	23
FORD Fusion 5P (2002>)	04	23

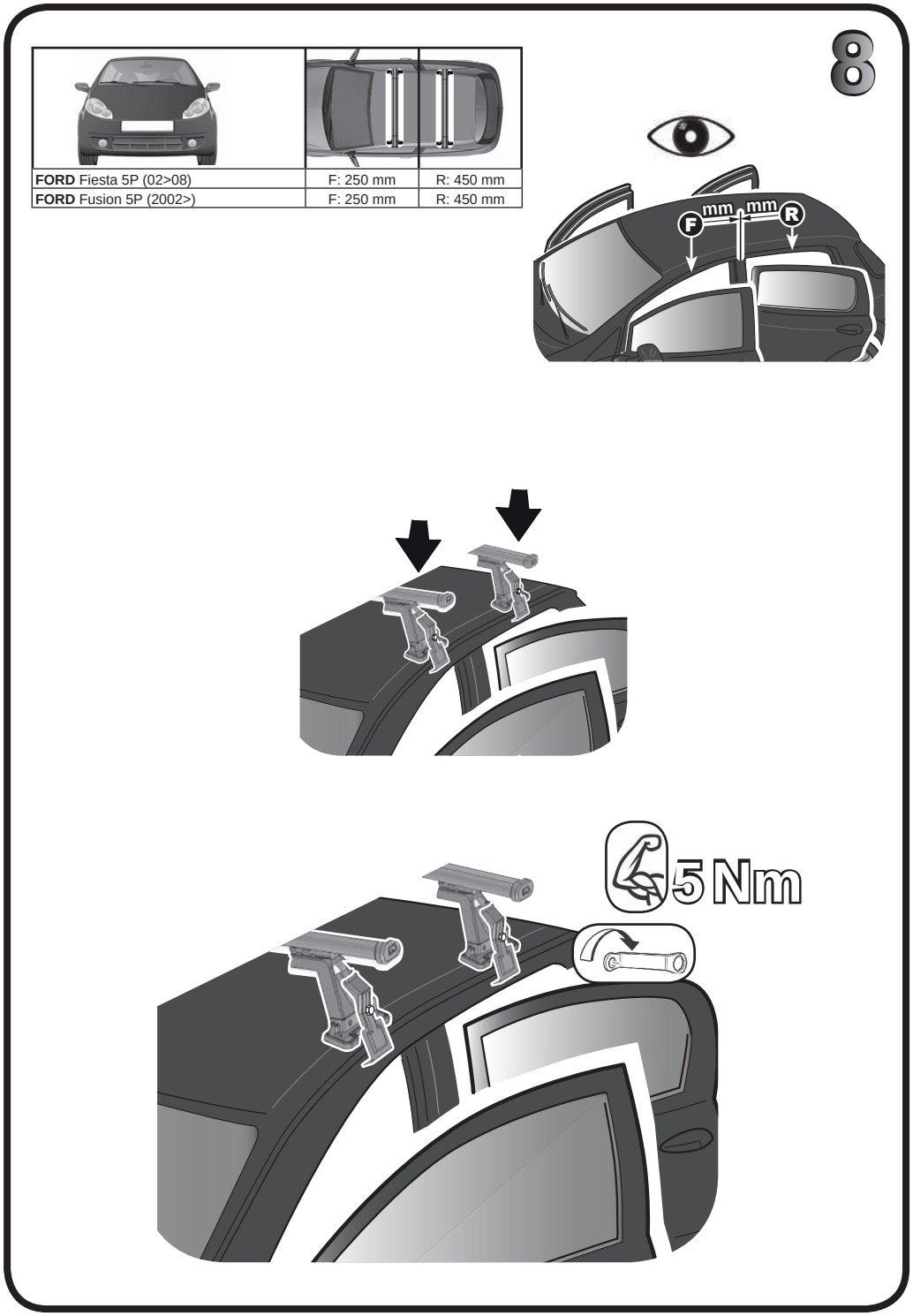

FORD Fiesta 5P (02>08)	F: 250 mm	R: 450 mm
FORD Fusion 5P (2002>)	F: 250 mm	R: 450 mm

Learn more about Roof Racks on our website.