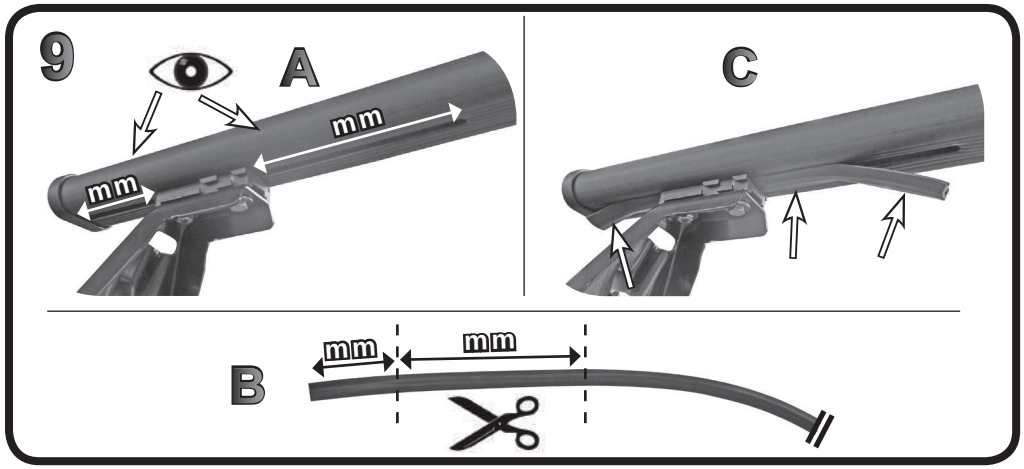

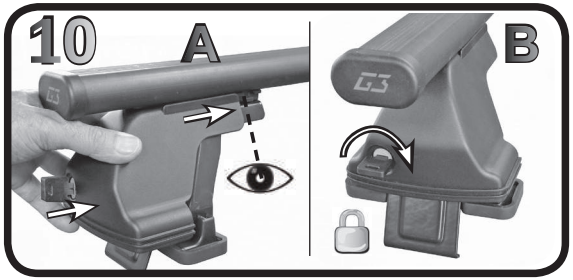

68.020 G3

FITTING INSTRUCTION
"Steel"

= 15 min.

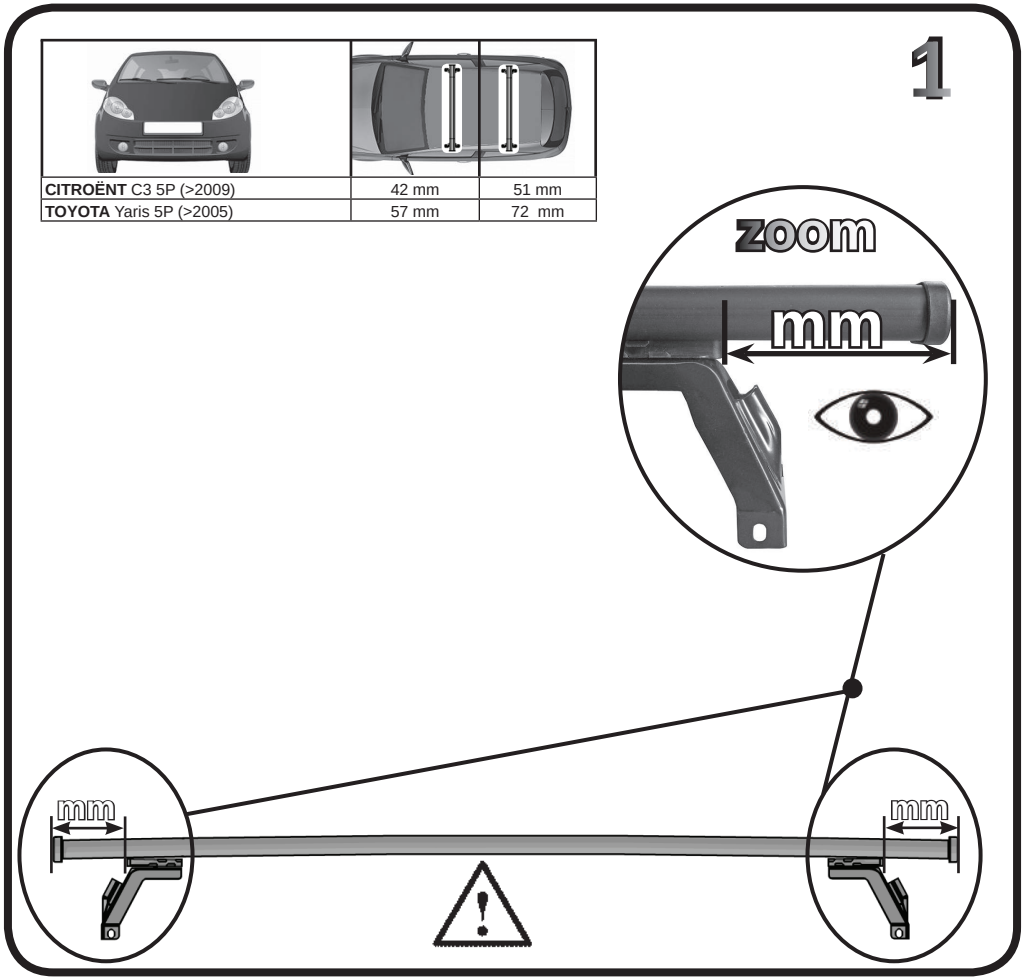

CITROËNT C3 5P (>2009)	42 mm	51 mm
TOYOTA Yaris 5P (>2005)	57 mm	72 mm

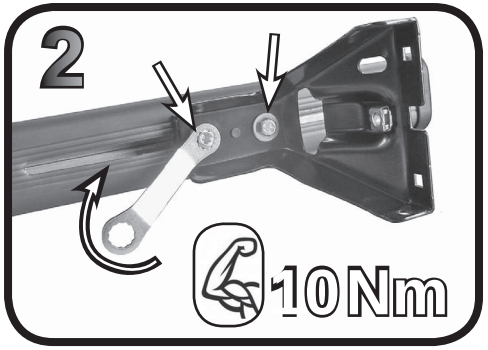

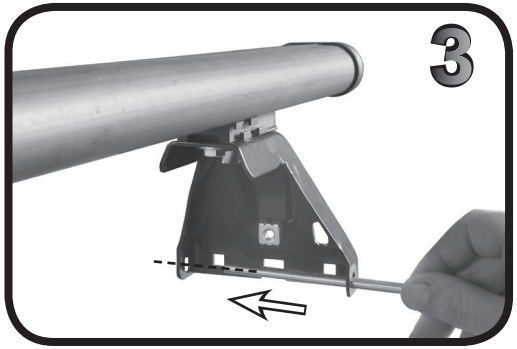

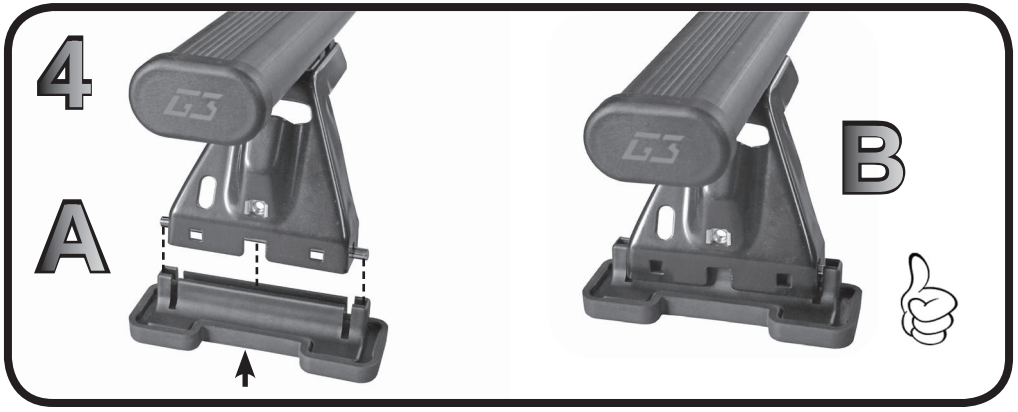

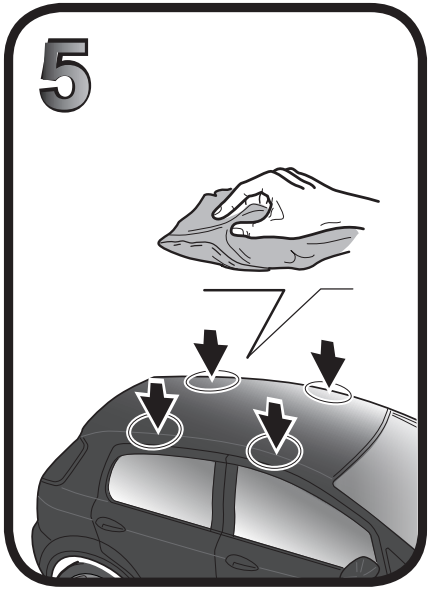

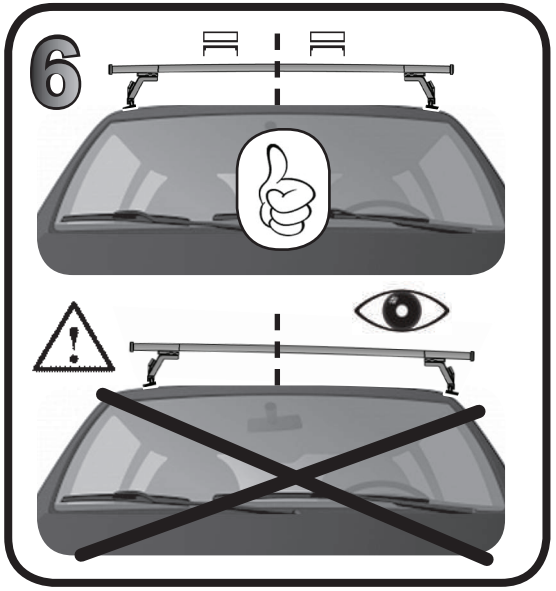

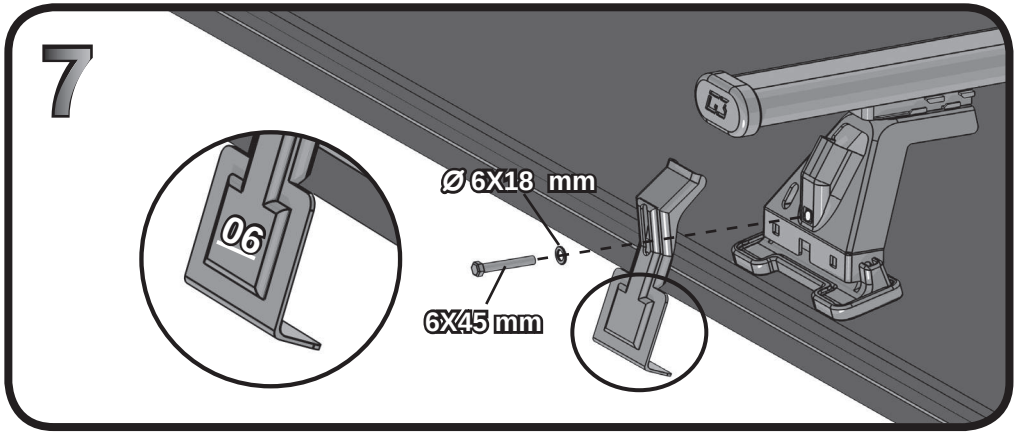

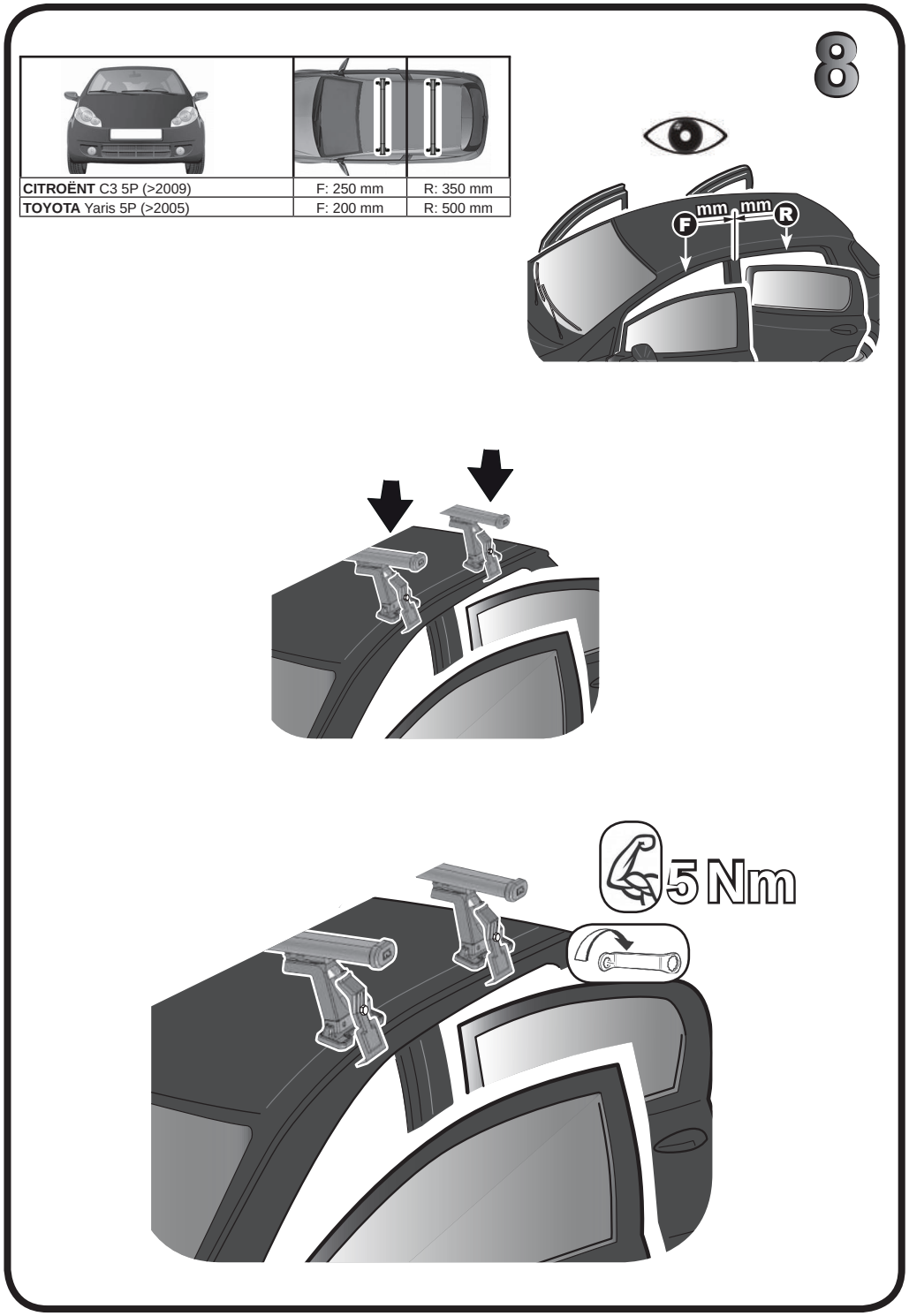

CITROËNT C3 5P (>2009)	F: 250 mm	R: 350 mm
TOYOTA Yaris 5P (>2005)	F: 200 mm	R: 500 mm

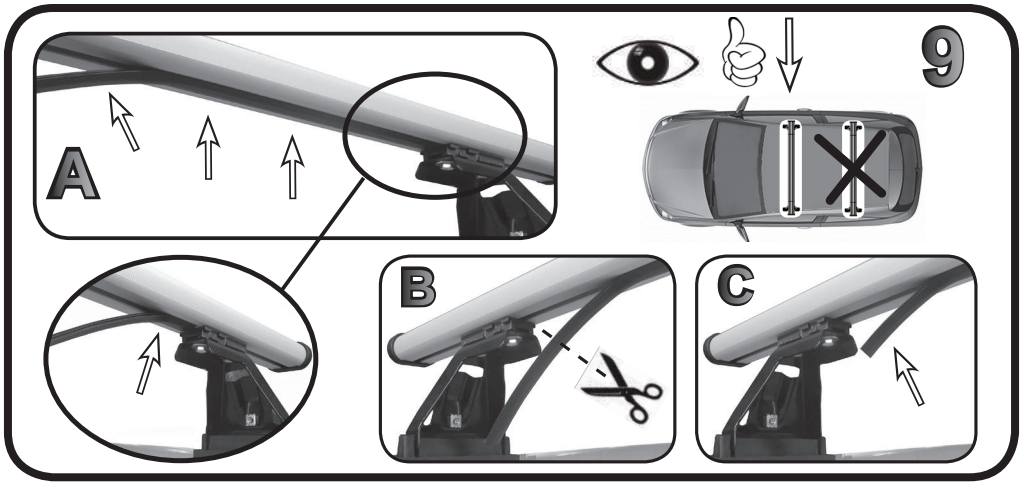

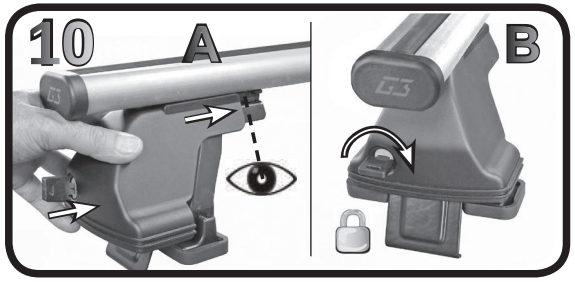

68.020

FITTING INSTRUCTION
"Aluminium"

= 15 min.

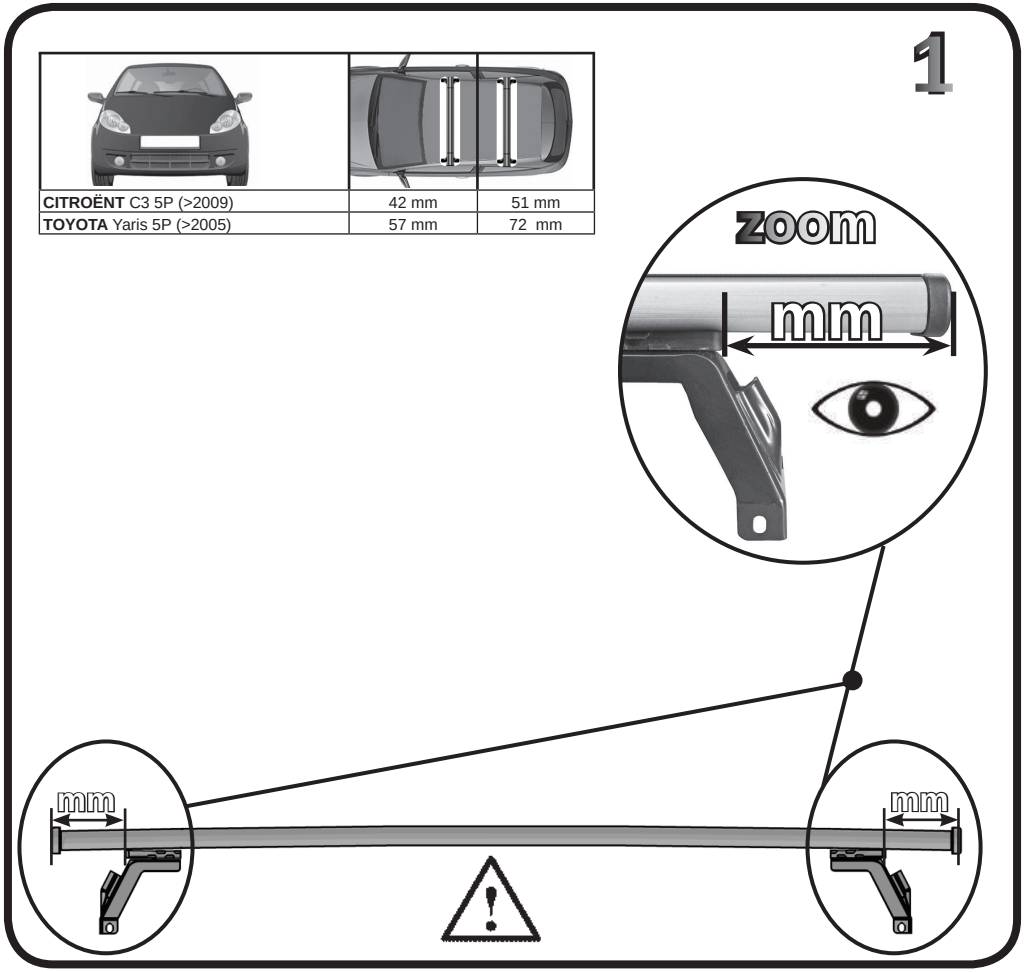

CITROËNT C3 5P (>2009)	42 mm	51 mm
TOYOTA Yaris 5P (>2005)	57 mm	72 mm

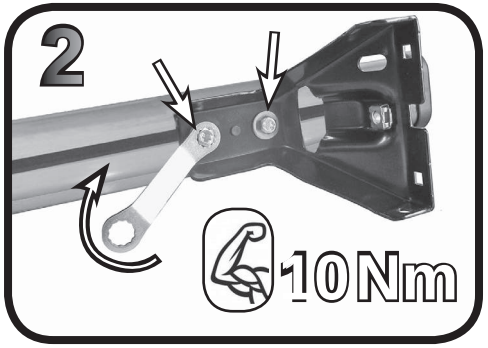

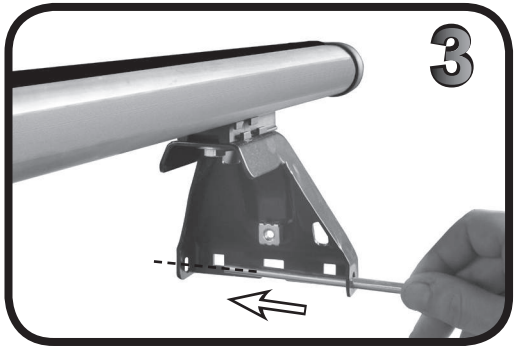

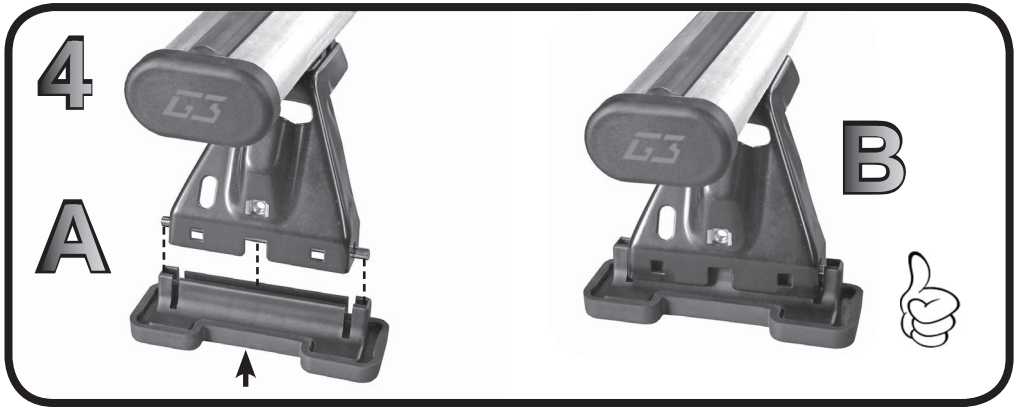

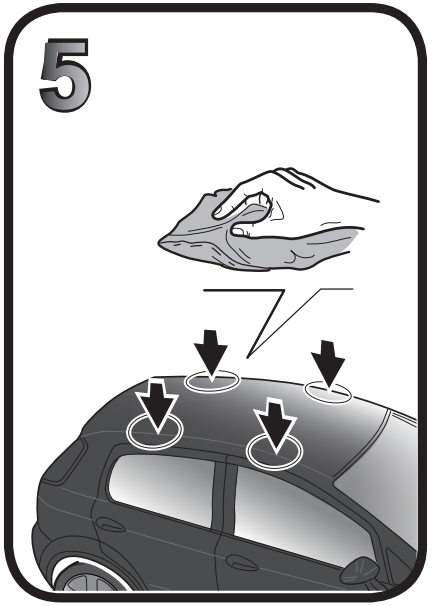

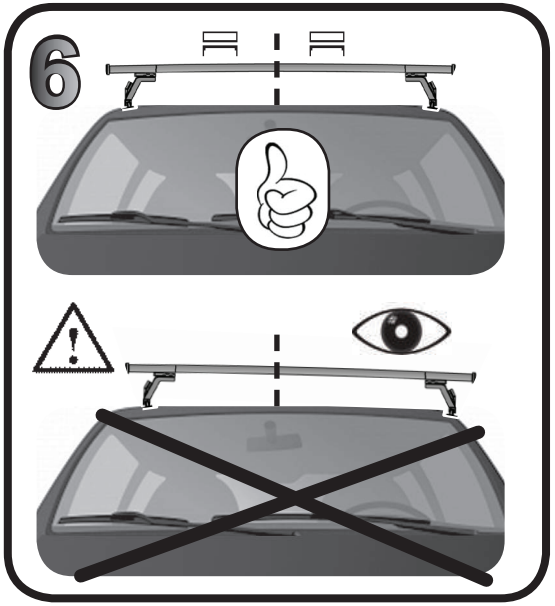

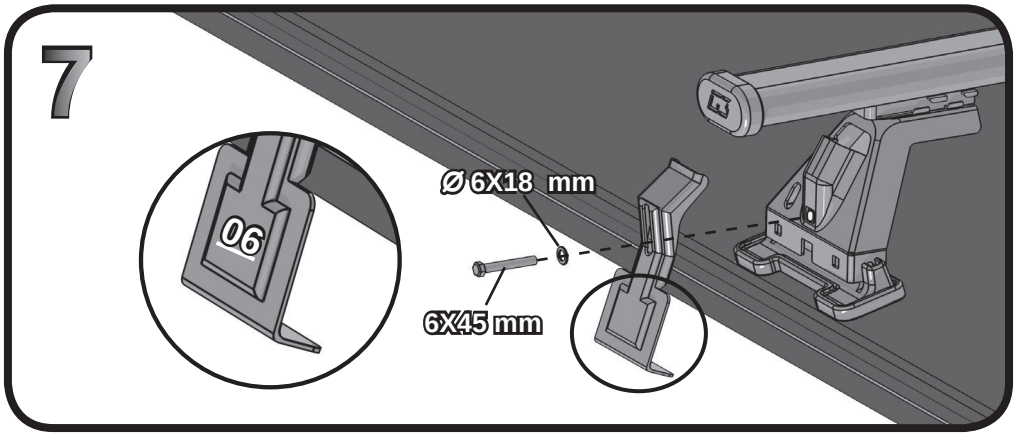

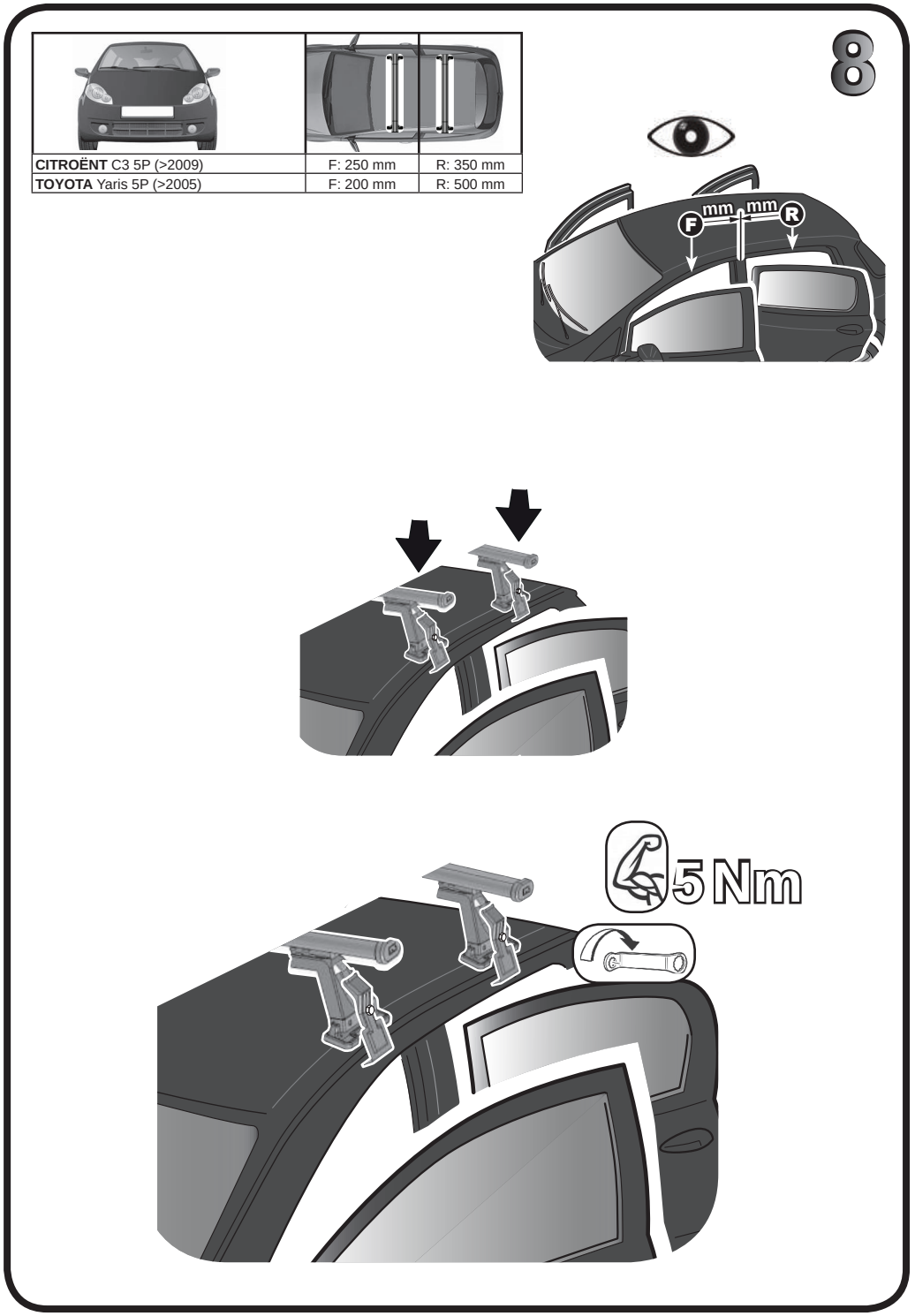

CITROËNT C3 5P (>2009)	F: 250 mm	R: 350 mm
TOYOTA Yaris 5P (>2005)	F: 200 mm	R: 500 mm

Learn more about Roof Racks on our website.