PRO-FLO® 4 LS

ELECTRONIC FUEL INJECTION

Installation Instructions

Edelbrock®

TABLE OF CONTENTS

Introduction.....1-2
Tools and System Requirements.....2
Fuel System Requirements.....3
Primary Kit Components (4150).....4
Component Layout (4150).....5-6
Primary Kit Components (XT).....7
Component Layout (XT).....8-9
Main Harness Layout.....10
Wideband Oxygen Sensor Installation.....11
Checking Hood Clearance.....12
Pro-Flo 4 Installation.....13-16
Fan and Tach Installation.....16
Fan and Tach Diagram.....17
Wiring w/ Pro-Flo Distributor & CDI Box.....18
Harness Schematics.....18-25
Pro-Flo 4 EFI Setup Wizard Map Matrix.....26-27

INTRODUCTION

Thank you for selecting the Edelbrock *Pro-Flo 4* EFI system. The *Pro-Flo 4* EFI system can be paired via bluetooth connection with an exclusive tuning software, E-Tuner 4, which is available as a free app for most Android-based tablets and smartphones. The use of a laptop PC is not required for tuning. The E-Tuner 4 Android app will enable real-time system performance monitoring and fine tuning adjustments. The *Pro-Flo 4* EFI system offers you the most bang for your buck, along with out-of-the-box performance from a name you can trust....Edelbrock!

FUEL PUMP SELECTION

WARNING

IMPROPER FUEL PUMP SELECTION MAY CAUSE SEVERE DAMAGE TO PRO FLO 4 ECU!

The ***Pro-Flo 4*** ECU is configured to directly power a fuel pump. The ECU's pump circuitry is rated for 10 Amps. Before connecting the fuel pump lead in the wiring harness to any fuel pump, the fuel pump's current draw rating must be checked – see pump manufacturer's specs for this information.

A conventional Walbro 255 LPH type pump or equivalent is typically acceptable. Many larger, high output performance fuel pumps will draw more than 10 Amps requiring the use of a relay. Damage caused by improper fuel pump selection is NOT covered under warranty. See FUEL SYSTEM REQUIREMENTS section for more information.

E-TUNER 4 SOFTWARE UPDATES

Edelbrock may periodically releases improved versions of the **E-Tuner 4** app software. These updates can include improvements to pre-installed calibration maps, additional calibration maps and updates to the user interface to improve the overall functionality of the software. It is recommended to check the Google Play Store or the Edelbrock website to verify that you have the most recent version of the app.

IMPORTANT WARNINGS

Before beginning the installation, verify that all components are present in the box. Inspect each component for damage that may have occurred in transit. If any parts are missing or damaged, contact Edelbrock Technical Support at (800) 416-8628, not your parts distributor.

CAREFULLY STUDY AND UNDERSTAND ALL INSTRUCTIONS BEFORE BEGINNING THIS INSTALLATION.

***NOTE**: The installation can be accomplished using common tools and procedures. However, it is highly recommended to have a solid understanding of automotive repairs and modifications, and be familiar with and comfortable working on your vehicle and your vehicle's fuel system. If you do not feel comfortable working on your vehicle, it is recommended to have the installation completed by a professional mechanic.*

PROPER INSTALLATION IS THE RESPONSIBILITY OF THE INSTALLER. IMPROPER INSTALLATION WILL VOID ALL MANUFACTURER'S STANDARD WARRANTIES AND MAY RESULT IN POOR PERFORMANCE AND/OR DAMAGE TO THE ENGINE AND/OR VEHICLE.

***WARNING:** The Edelbrock E-Tuner Software is intended to be used as a hands-free tuning tool and gauge display. Any function that requires prolonged attention should only be performed after coming to a complete stop. Distracted driving is extremely dangerous and illegal in most states. If adjustments are to be made during driving, always stop the vehicle in a safe location before performing any adjustments, or have a passenger perform the necessary adjustments. Please check with your local laws for legal mounting locations in your vehicle.*

02 SENSOR INSTALLATION

It is suggested that the 02 sensor bung be installed by a professional muffler shop prior to the installation of the Edelbrock ***Pro-Flo 4*** EFI system. DO NOT drive the vehicle with the 02 sensor unplugged, sensor damage **will** occur. An 02 sensor bung plug is provided for your convenience. Refer to Page #11 for the 02 sensor installation procedure.

AUTOMATIC TRANSMISSION CHECK

For best performance, economy, and emissions, the transmission kick down and shift points must be checked before and after the ***Pro-Flo 4*** EFI installation.

SPARK PLUG WIRES

High EMI suppression spark plug wires are necessary, do not use solid core spark plug wires. Resistor type spark plugs are necessary. Spark Plug wire length is determined by ignition coil mounting locations.

IGNITION COIL

The ***Pro-Flo 4*** LS coil wiring harness mates with the 7 pin "coil rack" connector that's on each bank of the engine. OEM coil harness (not included) must be used to connect the four individual coils per bank to the one 7 pin "coil rack" connector on each bank. Stock/OEM coils or equivalent replacements are acceptable to use. LS coils are not compatible with CDI ignition amplifiers.

IMPORTANT: PNs 35700, 35710, 35720, 35730 and 35740 require a coil harness that is SOLD SEPARATELY. GEN III 24X applications use coil harness PN 35713. GEN IV 58x applications use coil harness PN 35714.

EXHAUSTS SYSTEM

For best results, headers are recommended. For the Self Tuning function to properly operate, **the exhaust system must be completely sealed from header flange surface at cylinder heads to tailpipe**. The exhaust system should be completely inspected prior to installing the ***Pro-Flo 4*** EFI system. All gaskets and hardware should be replaced. All hardware torques should be checked on regular bases.

CHARGING SYSTEM

The ***Pro-Flo 4*** EFI System requires a constant battery voltage of 12.0 volts or greater to operate properly. Recommended battery capabilities are: 1000CA @32°F / 800CA @0°F. The vehicle's battery must be in good operating condition capable of maintaining a proper charge at all times. Verify the vehicle's charging system is operating properly and that the system voltage maintains 12.0 volts, or greater, at all times. All chassis grounds must be tight and clean. A ground cable from the engine block to chassis should be employed. All battery cables must be in good condition providing a clean tight connection to the battery.

BATTERY CHARGER PRECAUTIONS - PLEASE ADHERE TO THE FOLLOWING GUIDELINES OR DAMAGE TO ECU MAY OCCUR.

- Be sure the battery has a full charge prior to attempting to start the vehicle.
- Never use the "engine start or jump start" setting on a charger to start the engine.
- Do not set the battery charger above 10 amps when charging.
- Never turn on the ECU or attempt to start the engine with the battery charger connected
- Make sure the charger is not charging over 18.0 volts.
- If the battery is completely discharged, it is best to disconnect the negative terminal on the battery when charging.

COOLING SYSTEM

The minimum temperature requirement for the thermostat is 180°F.

TOOLS AND SYSTEM REQUIREMENTS

Use the following checklist for items needed.

- ❑ Wrench / Socket Set
- ❑ 7/8" Oxygen Sensor Socket or Equivalent
- ❑ Pliers (channel locks and hose clamp)
- ❑ Screwdrivers (Phillips and Flathead)
- ❑ Shop Rags
- ❑ Loctite 598 OEM High Temperature Silicone Gasket (O2 Sensor Compatible)
- ❑ Vehicle Wiring Diagram (if available)
- ❑ Thread Sealer
- ❑ High-Heat Anti-Seize Compound
- ❑ 180°F Thermostat
- ❑ Resistor Type Spark Plugs (*Use correct heat range for your particular application*)
- ❑ High EMI Suppression Spark Plug Wires *(DO NOT use solid core spark plug wires)*
- ❑ EFI Fuel System (*See fuel system recommendation*)
- ❑ Fuel fittings (*Additional fittings may be required depending on routing preferences. Visit www.russell.com*)
- ❑ 30 AMP Automotive Relay (*If using electric fans - One relay required for each accessory)*

EMISSION CONTROLS

The Edelbrock ***Pro-Flo 4*** EFI system will not accept stock emissions control systems. Check your local emissions laws for requirements before installing the ***Pro-Flo 4*** EFI system. ***This system is not legal for use on pollution-controlled motor vehicles.***

FUEL REQUIREMENTS

Because the ***Pro-Flo 4*** EFI system uses a wideband oxygen (02) sensor, unleaded fuel must be used at all times. **Using leaded fuels will damage the 02 sensor and void your warranty**. If leaded fuel is present in your fuel tank, the tank must be drained and filled with unleaded fuel. It is also recommended to have a full fuel tank before operating the vehicle (*after the installation*).

NOTE*: E85 fuels are not compatible with any* ***Pro-Flo 4*** *EFI systems.*

FUEL SYSTEM REQUIREMENTS

The ***Pro-Flo 4*** EFI system requires a high pressure fuel system providing 43-45 or 58-60 psi of fuel pressure with a flow rating of 57 GPH (215 liter/hr). These fuel system requirements can support up to 600 HP. The following recommended options are available separately.

NOTE: Fuel pressure has a direct role in how much fuel is delivered to the engine when the injectors are opened. The higher the fuel pressure, the more fuel that is delivered during an injector opening event. It is critical for the proper operation of your fuel injection system that the fuel pressure matches the injector pulse widths demanded by the calibration for your specific application. For the recommended fuel pressure setting for your engine application, please refer to the ***Pro-Flo 4*** EFI setup Wizard Map Matrix on pages 25-26.

Fuel Pressure Regulator Vacuum Reference: The Fuel Pressure Regulator MUST reference manifold pressure to ensure a proper fuel pressure differential during an injector opening event under high vacuum conditions. The vacuum reference will lower fuel pressure slightly under idle and cruise conditions. The amount of pressure reduction will vary from engine to engine. During wide open throttle conditions, the fuel pressure should read the set point value of 43psi or 58psi depending on your application. The fuel pressure regulator should always be set to the target pressure with the vacuum reference hose disconnected from the Fuel Pressure Regulator. The hose from the manifold MUST be plugged to prevent a vacuum leak when setting the pressure. Remove the plug and reconnect the vacuum line to the fuel pressure regulator after target pressure is achieved.

Part Number 3604 Adjustable Return-Style EFI Fuel Kit: Includes an inline 67 GPH (255 LPH) fuel pump, adjustable EFI fuel pressure regulator, pre-pump and post-pump fuel filters, twenty feet of 3/8" fuel injection fuel hose and all necessary fittings, mounts and clamps. Capable of supporting 600 HP.

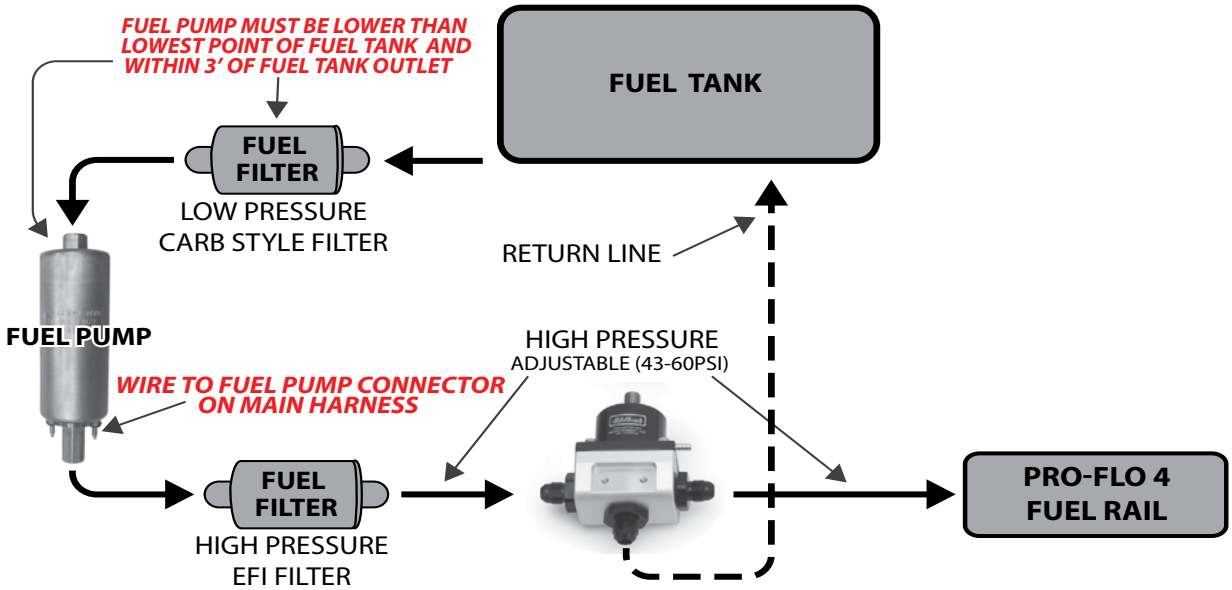

PRIMARY KIT COMPONENTS (4150)

(Images are for reference only and may not represent actual components.)

Item	P/N	QTY.	Description
1	Various	1	Pro-Flo 4 Manifold Assembly
2	37-3605	1	7" Tablet (if applicable)
3	37-3604	1	Oxygen Sensor
4	37-3909	1	Pro-Flo 4 ECU
5	37-1631	1	Injector/Sensor Harness
6	37-1630	1	Main Engine Harness
7	37-3518	1	Sensor, MAT (shown with grommet)
8	37-1632 37-1633	1	58x Coil Harness 24x Coil Harness

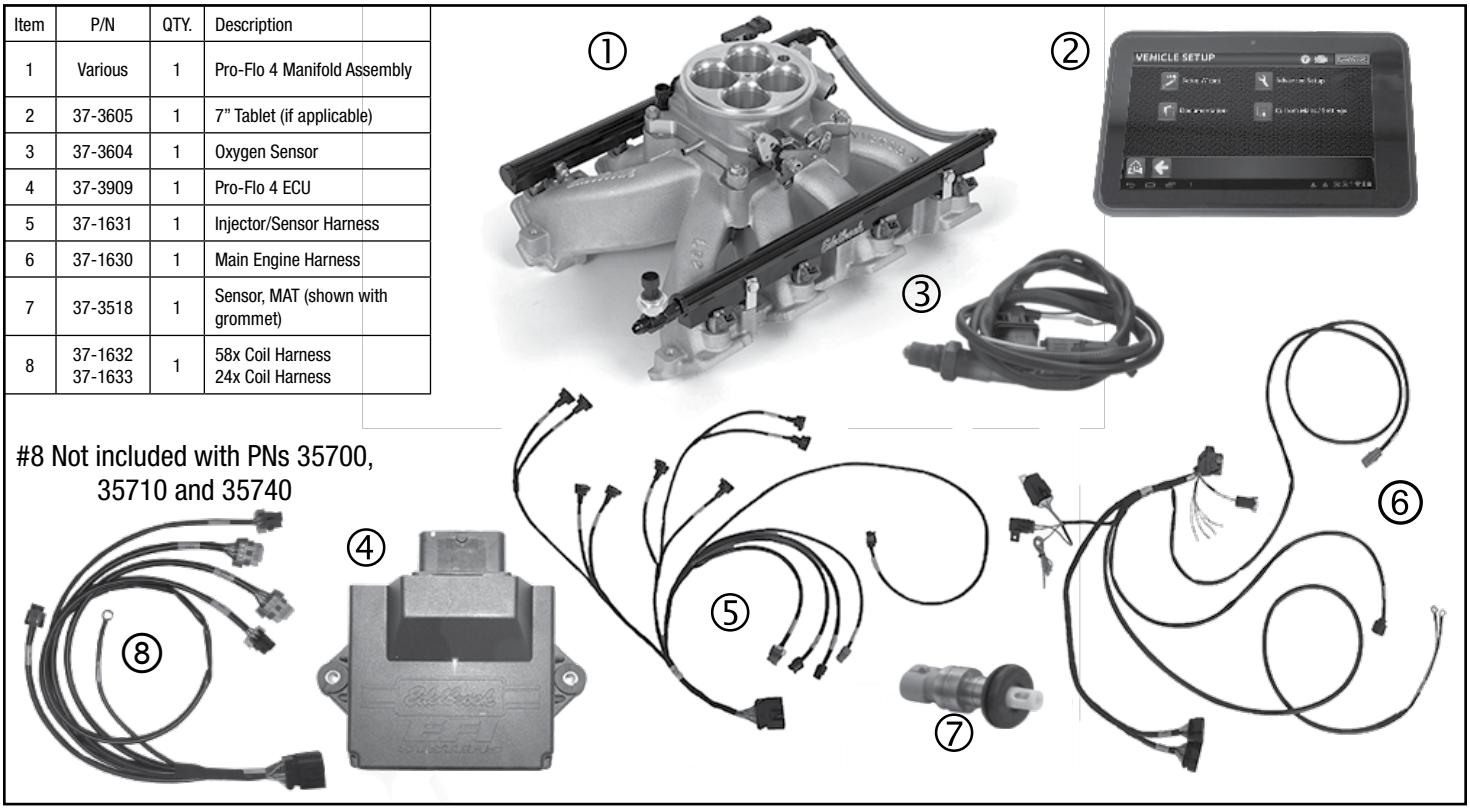

#8 Not included with PNs 35700, 35710 and 35740

MAIN HARDWARE (4150)

(Images are for reference only and may not represent actual components.)

Item	P/N	QTY.	Description
1	36-3505	2	Sheet Metal Screw
2	38-0590	1	Throttle Return Spring Bracket
3	40-3970	1	1/2" to 3/8" Pipe Reducer
4	52-8097	1	Oxygen Sensor Bung Plug
5	52-9710	1	Oxygen Sensor Bung
6	74-4920	1	Throttle Return Spring
7	52-0630	1	Vacuum T-Fitting
8	8016	1	Throttle Linkage Hardware
9	Various	2	Intake Manifold Gaskets x8
10	37-1549	1	Car Charger w/USB Cable
11	78-2004	10	11" Tie Wraps

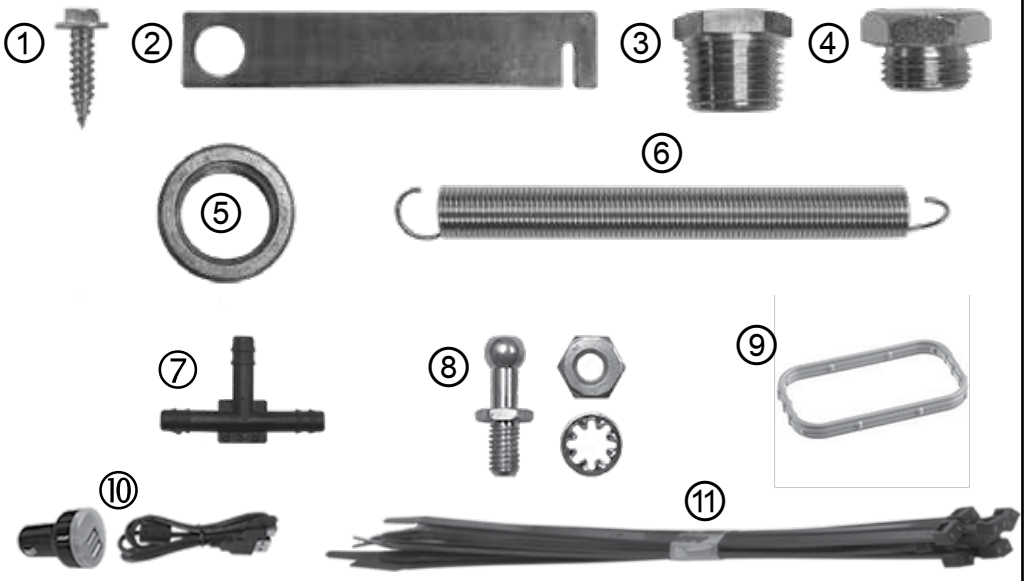

PRO-FLO 4 4150 STYLE MANIFOLD - COMPONENT LAYOUT

The Edelbrock Pro-Flo 4 EFI system delivers fuel and air to the engine via an induction system consisting primarily of a 4-barrel throttle body, dual fuel rails, and eight fuel injectors. The induction system is fully assembled, tested, pressure checked, and flowed at the Edelbrock Factory in Torrance, California. Avoid disassembling these components if possible.

***NOTE**: ALL UNUSED VACUUM PORTS MUST BE CAPPED TO AVOID VACUUM LEAKS*

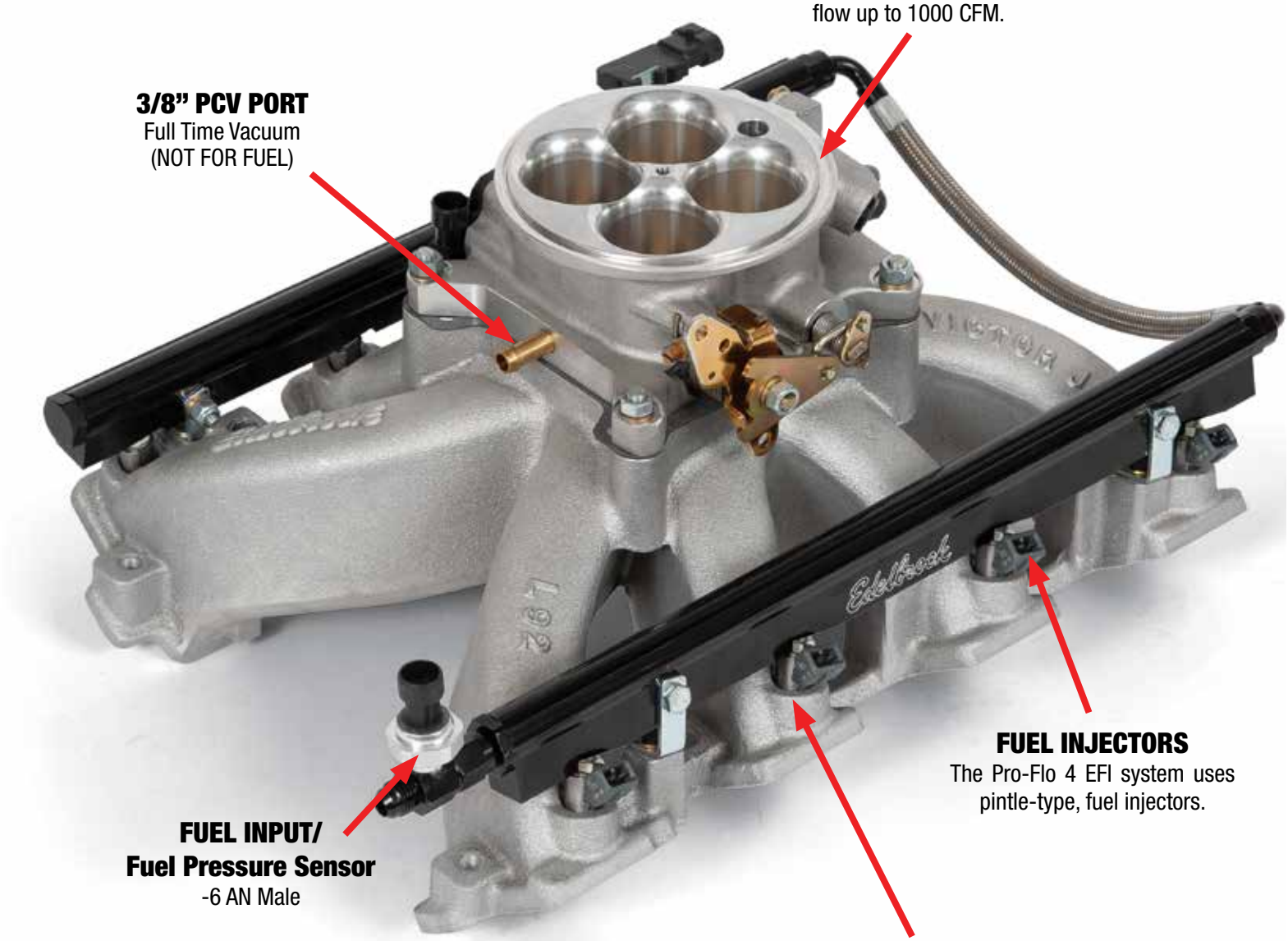

4-BARREL THROTTLE BODY
The Pro-Flo 4 system uses a 4150 style flanged throttle body with four throttle blades arranged in a conventional 4-barrel pattern. The air valve can flow up to 1000 CFM.

3/8" PCV PORT
Full Time Vacuum
(NOT FOR FUEL)

FUEL INJECTORS
The Pro-Flo 4 EFI system uses pintle-type, fuel injectors.

FUEL INPUT/
Fuel Pressure Sensor
-6 AN Male

FUEL RAILS
The extruded aluminum fuel rail assemblies distribute the high pressure fuel to the injectors.

(Images are for reference only and may not represent actual components.)

PRO_FLO 4 4150 STYLE MANIFOLD - COMPONENT LAYOUT

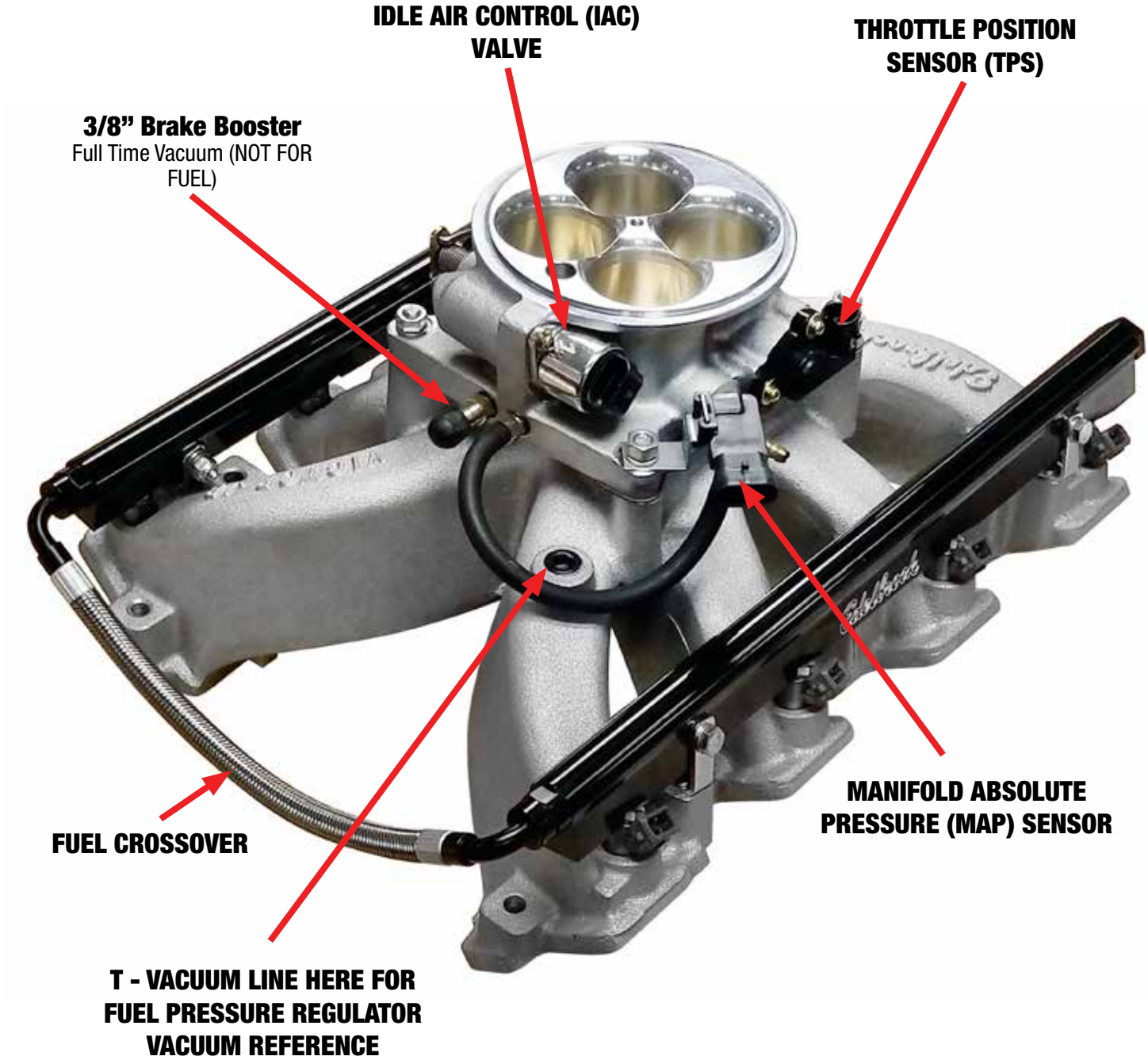

(Images are for reference only and may not represent actual components.)

PRIMARY KIT COMPONENTS (XT)

(Images are for reference only and may not represent actual components.)

Item	P/N	QTY.	Description
1	Various	1	Pro-Flo 4 Manifold Assembly
2	37-3605	1	7" Tablet (if applicable)
3	37-3604	1	Oxygen Sensor
4	37-3909	1	Pro-Flo 4 ECU
5	37-1631	1	Injector/Sensor Harness
6	37-1630	1	Main Engine Harness
7	37-3518	1	Sensor, MAT (shown with grommet)
8	37-1632 37-1633	1	58x Coil Harness 24x Coil Harness

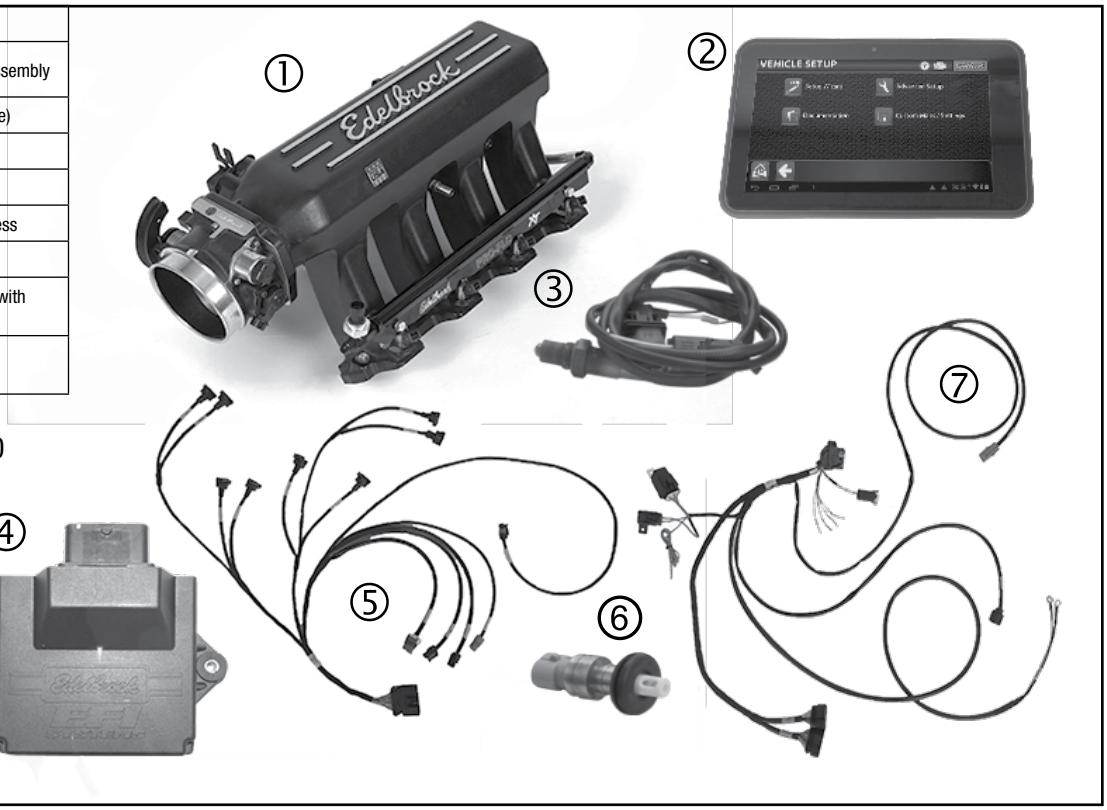

#8 Not included with PNs 35720 and 35730

MAIN HARDWARE (XT)

(Images are for reference only and may not represent actual components.)

Item	P/N	QTY.	Description
1	36-3505	2	Sheet Metal Screw
2	40-3970	1	1/2" to 3/8" Pipe Reducer
3	52-8097	1	Oxygen Sensor Bung Plug
4	52-9710	1	Oxygen Sensor Bung
5	52-0630	1	Vacuum T-Fitting
6	8016	1	Throttle Linkage Hardware
7	Various	2	Intake Manifold Gaskets x8
8	37-1549	1	Car Charger w/USB Cable
9	78-2004	10	11" Tie Wraps
10	37-1635	1	TPS Extension Harness
11	37-1636	1	IAC Extension Harness

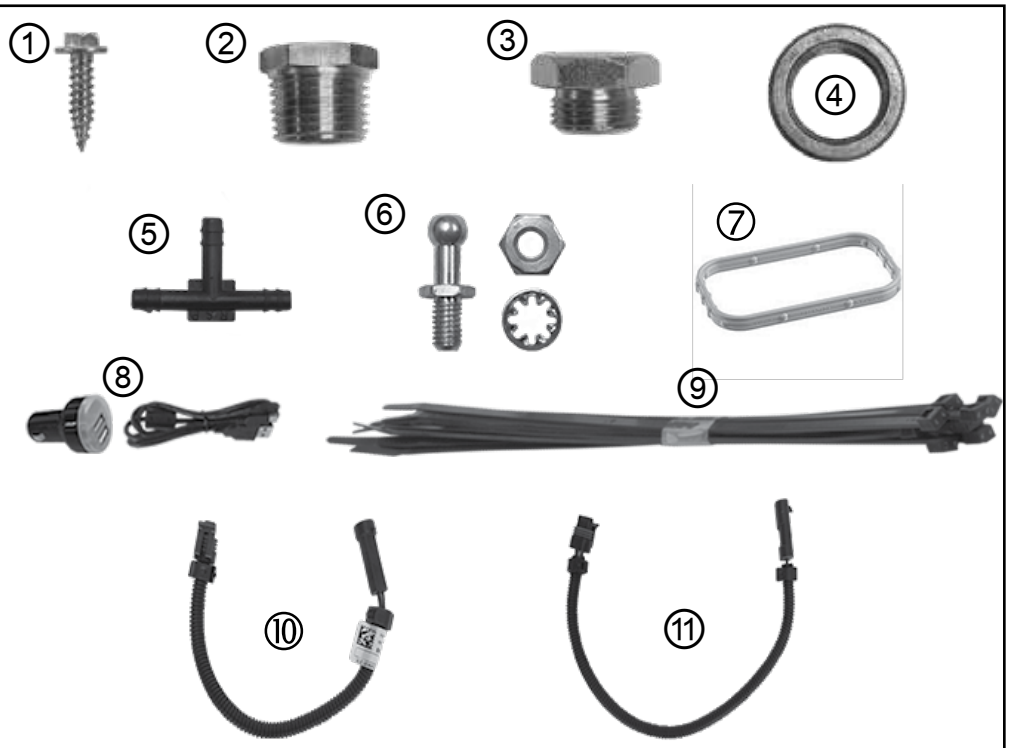

PRO-FLO 4 XT MANIFOLD - COMPONENT LAYOUT

The Edelbrock Pro-Flo 4 XT EFI system delivers fuel and air to the engine via an induction system consisting primarily of a traditional 90mm throttle body, dual fuel rails, and eight fuel injectors. The induction system is fully assembled, tested, pressure checked, and flowed at the Edelbrock Factory in Torrance, California. Avoid disassembling these components if possible.

***NOTE**: ALL UNUSED VACUUM PORTS MUST BE CAPPED TO AVOID VACUUM LEAKS*

(Images are for reference only and may not represent actual components.)

PRO-FLO 4 XT MANIFOLD - COMPONENT LAYOUT CON'T

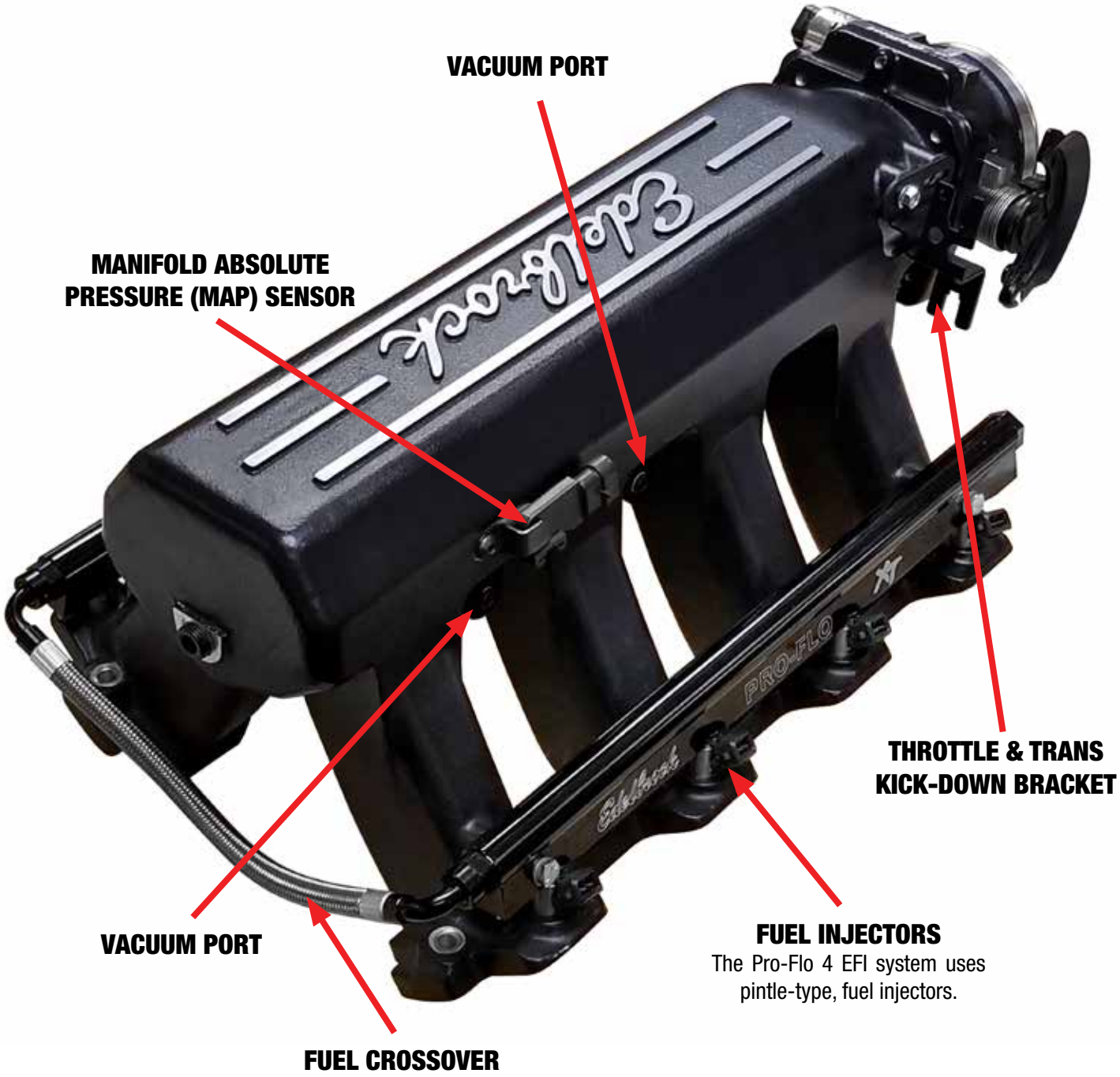

(Images are for reference only and may not represent actual components.)

HARNESS LAYOUT

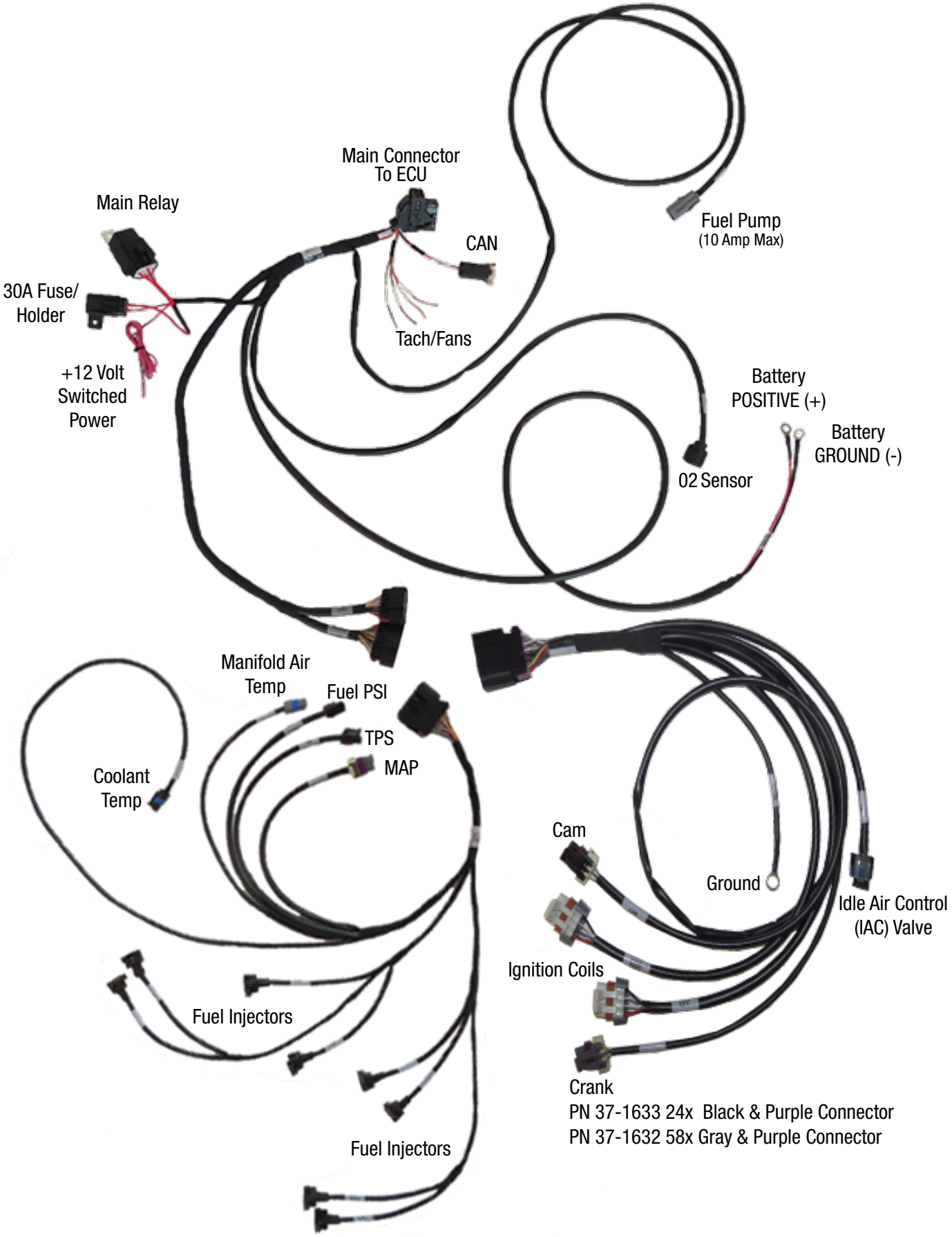

WIDEBAND OXYGEN (O2) SENSOR INSTALLATION PROCEDURE

The O2 sensor must be installed in the exhaust system using the supplied O2 sensor bung from the hardware bag. The O2 sensor is required as it measures the oxygen content of the exhaust gas, which is used by the ECU to manage fuel delivery under closed loop control.

NOTE: *It is suggested that the O2 sensor bung be installed by a professional muffler shop prior to the installation of the Edelbrock Pro-Flo 4 EFI system. DO NOT drive the vehicle with the O2 sensor unplugged as this will damage the O2 sensor. An O2 sensor bung plug is provided for your convenience.*

Because of harness length constraints, it is highly recommended to install the O2 sensor and the Pro-Flo 4 ECU on the same side of the vehicle.

WARNING*: A properly sealed exhaust system is critical for the Pro-Flo 4 EFI to function properly. Any air leaks in the exhaust system, upstream of the O2 sensor, will skew the O2 sensor's output resulting in improper calibration which can lead to engine damage. Improper installation of the O2 sensor and any damage that may result is not covered by any Edelbrock Warranty.*

1. Verify that the header and tailpipe gaskets and flanges are in good condition. It is recommended to replace any damaged gaskets and flanges as they may cause exhaust leaks, which can lead to inaccurate Air Fuel Ratio (AFR) readings. Torque all fasteners to manufacturer's specifications to avoid any possible exhaust leaks.

   WARNING*: Be sure any RTV Silicone used to seal the exhaust system is compatible with Oxygen Sensors. This information will be found on the silicone tube packaging.*

   WARNING: *The Exhaust system must be completely sealed from cylinder head to tailpipe. This is the number one cause of poor performance as exhaust leaks affect the air/fuel mixture seen by the ECU. Use locking type hardware to secure exhaust headers to cylinder heads and exhaust collector to mid-pipe. DO NOT USE NYLOC NUTS. Retorque exhaust hardware on a regular basis to ensure exhaust leaks do not occur.*

2. The O2 sensor bung must be installed in the exhaust system as close to the engine as possible, after the header collector and before the catalytic converter (*if equipped*). This location must be approximately 10° above horizontal and within reach of the O2 sensor harness connector on the Pro-Flo 4 main harness. ***NOTE: There must be at lease 24" of exhaust pipe after the O2 sensor. Open headers or "zoomies" will cause the sensor to read incorrectly.***

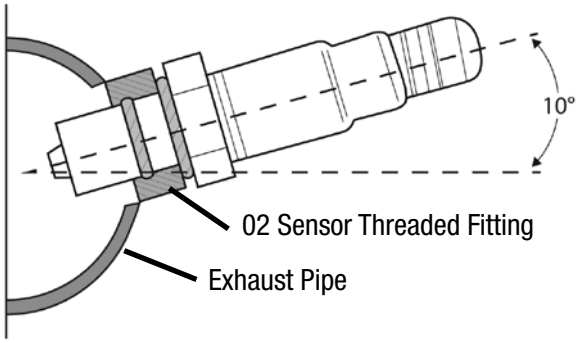

3. Mark the drilling location on the exhaust system pipe with a permanent or paint marker. Check the proposed mounting location to ensure the clearance for the O2 sensor is adequate and that the O2 sensor connector on the main harness will reach the O2 sensor location. Make sure to take engine movement into consideration when checking for clearance.

4. Drill a 5/8" hole at your mounting location. Deburr and clean the hole as needed.

5. Fit the provided bung onto the hole opening. Secure the bung with a clamp and weld the bung into place.

6. Once the installation of the bung is complete, make sure to clean the threads of the fitting to ensure it's free of debris.

   NOTE: *The O2 sensor bung uses an M18 x 1.5 thread pitch.*

7. If you are ready to install the Pro-Flo 4 EFI system, proceed to Step #9 to install your O2 sensor. Otherwise, if your Pro-Flo 4 EFI System will be installed at a later time, temporarily install the O2 sensor bung plug supplied in the hardware bag with a 7/8" wrench. This will allow you to drive the vehicle until the O2 sensor is installed.

8. When you are ready to begin installation of the Pro-Flo 4 EFI system, remove the O2 sensor bung plug.

9. Apply a high-heat anti-seize compound (*not included*) to the threads of the O2 sensor and install into the bung using an 7/8" oxygen sensor socket or 7/8" wrench. *NOTE: Avoid contacting tip of O2 Sensor with any anti seize compound, damage may occur.*

10. Connect the O2 sensor to the O2 sensor connector on the main Pro-Flo 4 ECU harness.

DETERMINING HOOD CLEARANCE

1. Prior to installing the Pro-Flo 4 EFI system, it is highly recommended to verify that you will have enough hood clearance.
2. Using modeling clay or putty, not included, make five small cones about 2-3 inches high.
3. Position the cones on the air cleaner at front, rear, each side, and on the center stud.
4. Close the hood to locked position and re-open.
5. The height of the cones indicate the amount of clearance between the hood and the air cleaner. Record these measurements.

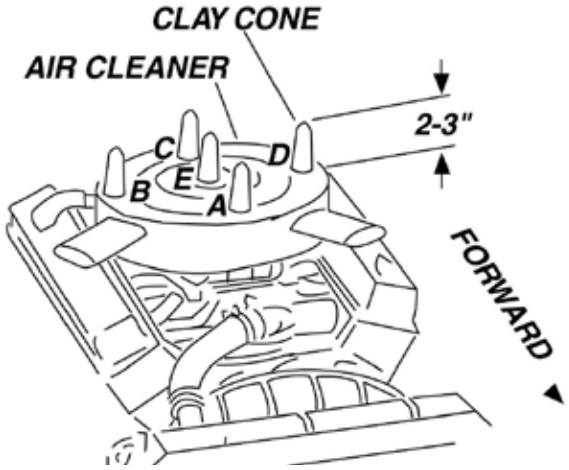

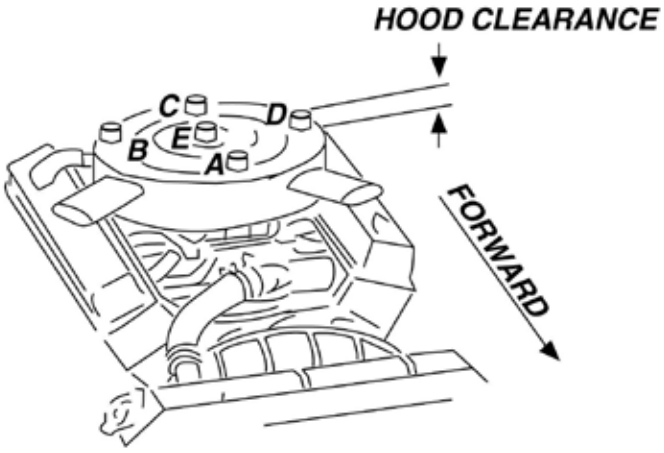

MANIFOLD & CARBURETOR HEIGHT VS. PRO-FLO 4 HEIGHT

1. Remove the factory air cleaner.
2. Lay a straightedge, such as a yardstick, across the top of the carburetor from front to back.
3. Measure from the base of the manifold end seal surfaces to the straightedge.
4. Record these measurements (height A and height B).
5. Add height A and height B and divide by two to get the average height. Ex: (A+B) / 2
6. Measure the Pro-Flo 4 system from the base of the manifold to the top of the throttle body or the highest point of the manifold (XT models).
7. Compare the two measurements. If the Pro-Flo 4 unit is taller, subtract the difference from the hood clearance figure to determine the new hood clearance.

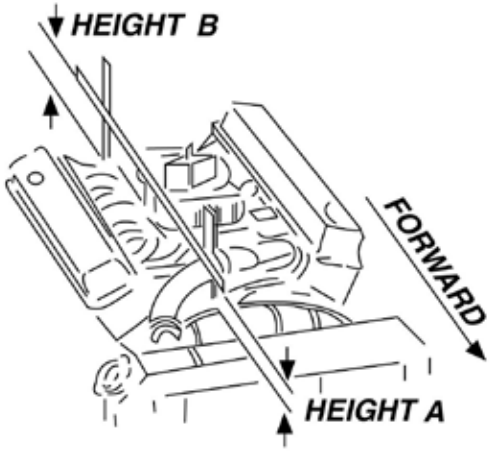

CAUTION: *Because of engine torque, it is recommended to maintain at least 1/2-inch of clearance between the hood and air cleaner. If hood clearance is insufficient, a low profile air cleaner may solve the problem.*

PRO-FLO 4 EFI INSTALLATION

NOTE: *Though visually different, the installation procedure is relatively the same between manifolds using 4150 style manifolds and XT type manifolds.*

1. Disconnect the negative battery terminal and isolate the cable so it does not come in contact with the battery or body of the vehicle.
2. Remove the gas cap to release any fuel pressure present in the system.
3. If applicable, remove the factory intake manifold and any hoses and wires connected to it.
4. Thoroughly clean the intake flanges on the cylinder heads with lacquer thinner using a lint free shop rag. (See Figure 1)
5. Lubricate the provided O-ring gaskets with silicone lube and install them into the grooves around the intake manifold ports. (See Figure 2)

Figure 1

Figure 2

6. Test fit manifold to cylinder heads to verify fit and that there are no interferences.
7. Use the torque sequence below to install the manifold to cylinder head bolts (not included). Edeblrock bolt kit #8515 is recommended.
   NOTE: *On most applications, removal of fuel rails prior to installing the manifold assembly is not required.*

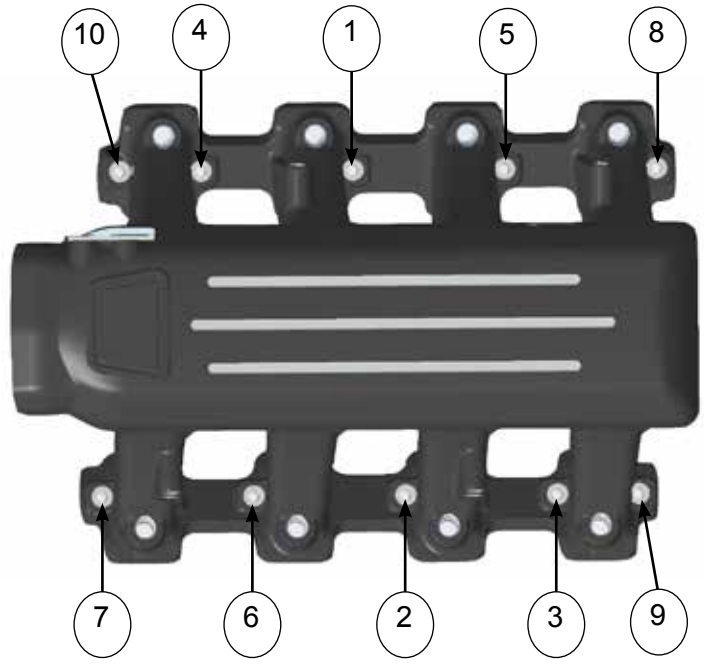

Chevy LS Torque Sequence
Torque all bolts to 11 ft/lbs.

8. Attach the throttle linkage and verify it moves freely without interference. Any throttle linkage interference MUST be resolved before proceeding.

9. Install LS style coils and spark plug wires (not included).

10. Find a suitable mounting location for the ECU. This should be on the same side of the vehicle as the O2 sensor. Recommended mounting locations are the fender well, inner fender panel or inside the vehicle on the passenger side kick panel. Be sure the O2 sensor connection reaches the main harness connector.
    ***NOTE**: It is recommended to mount the ECU in a location away from excessive heat, vibration and possible water exposure.*

11. Using the supplied sheet metal screws from hardware bag, mount the ECU to the desired mounting location.

12. Find a suitable harness route in the engine compartment which leads to the ECU location. Connect the Pro-Flo 4 main harness to the ECU. TIP: For most installations, the harness fits best if routed from the rear of the engine back towards the firewall, across the firewall, then forward towards the ECU location.
    ***NOTE**: Avoid routing the harness near any ignition related components (ignition coil and spark plug wires). Also avoid routing near the headers, sharp edges, or any tight radius corners that may damage the harness.*

13. Route the power and ground leads on the main harness towards the battery. Connect the RED POWER lead (+12 Volt) and the BLACK GROUND (-) lead to the appropriate battery terminals. If necessary, the power and ground leads may be extended to reach the battery. However, the use of 12 gauge wire or larger is required.
    WARNING: All power and ground leads must connect directly to the battery. DO NOT RUN POWER TO THE STARTER OR GROUND TO ENGINE BLOCK OR CHASSIS!

14. Securely mount the Fuse Holders and the Main Relay in an accessible location.

15. Connect the Pink/Black IGN switched wire on the main harness to a +12 Volt switched power source that provides +12 Volts when the key is both “ON” and “CRANKING”.
    ***NOTE**: It is critical that the switched +12 Volts to the IGN switch wire is constant during cranking. This is a common issue on vehicles with no start or hard to start issues.*

16. Secure the harness and leads with tie wraps from the hardware bag. Avoid over tensioning wire ties as this may damage the harness.

17. If not already completed, remove the previously installed O2 sensor bung plug from the bung in the exhaust system, and install the O2 sensor.
    ***NOTE:** Make sure to apply a high heat anti-seize compound to the threads of the O2 sensor as recommended in the O2 Sensor installation section. Avoid contacting tip of O2 Sensor with any anti seize compound, damage may occur.*

18. Connect the main harness lead labeled "O2 Sensor" to the O2 sensor connector. Secure the O2 sensor lead as to avoiding contact with the exhaust pipes. Make sure to leave plenty of air space between the harness and the exhaust manifolds/headers. A 12” extension is available from www.bmotorsports.com #CONN-85773

19. Connect the main harness to the fuel pressure sensor located on the fuel rail. The fuel pressure sensor fitting is assembled to the fuel inlet fitting on fuel rail. The fuel inlet may be on left or right fuel rail. Locate the fuel pressure inlet fitting as necessary for the most convenient fuel supply hose routing on your application.

20. Install the Coolant Temperature sensor into the cylinder head and connect the injector/sensor harness Coolant Temperature connector to the sensor.

21. Mount the air temperature sensor in the air cleaner base or intake tube for XT applications. Drill the air cleaner base/intake tube with a ¾ drill and deburr any sharp edges. Install the air temperature sensor grommet in the base, then slide sensor into grommet. Connect the injector/sensor harness air temp connector to the sensor.

22. Due to the universal nature of the Pro-Flo 4 EFI system, it’s impossible to preset the throttle blades to best fit all the different possible idle characteristics of engine and cam size combination. To help the engine idle during initial startup, it is recommended to adjust the throttle screw as needed to keep the engine from stalling.
    - Street/Stock Cam (210° or Less): Turn (clockwise) the throttle screw 1/2 turn from the current factory setting.
    - Mild Cam (210° or 230°): Turn (clockwise) the throttle screw 1 turn from the current factory setting.
    - Race Cam (230° or Greater): Turn (clockwise) the throttle screw 1.5 turns from the current factory setting.

23. If applicable, install the throttle return spring and bracket from hardware bag. Manifold bolt locations are ideal mounting points.

24. INSTALL THE FUEL DELIVERY SYSTEM. Use the provided 2 pin male Weather Pack connector and terminals to build a plug-in fuel pump power/ground connection with the fuel pump power lead in the main wiring harness labeled “Fuel Pump”. Maximum fuel pump current must be less than 10 Amps if powering the pump directly from the ECU. If using a fuel pump that draws more than 10 Amps during normal operation, a relay must be used – see fuel pump wiring diagrams below. When the ignition switch is first turned on, the ECU will run the fuel pump for 8 seconds to prime the fuel system and then shut off. The fuel pump will be turned on anytime an RPM signal is detected by the ECU. Refer to your fuel system’s installation instructions then return to this manual and continue to the next step.

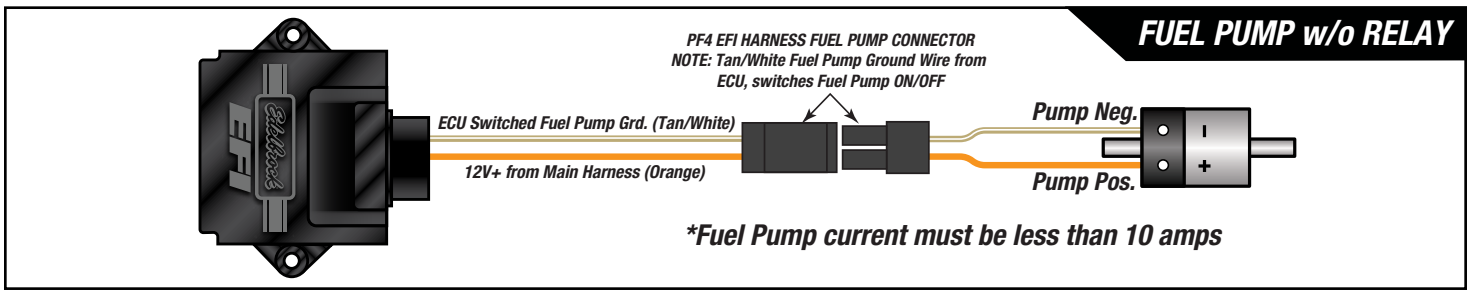

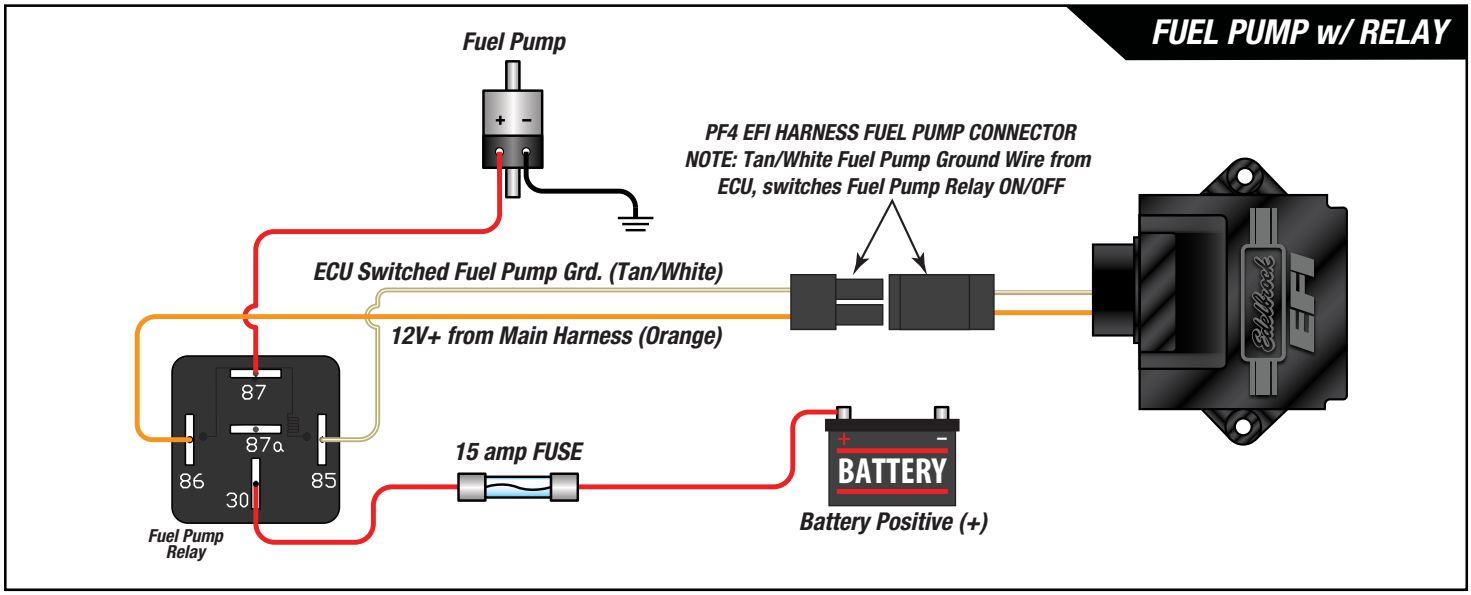

25. If you are supplying your own tablet or smartphone, you can download the Edelbrock E-Tuner 4 app on the Google Play Store. Just search for Edelbrock E-Tuner and download the app like any other Android app. Refer to page #1 of the E-Tuner user manual for further information.

WARNING: DO NOT START OR DRIVE THE VEHICLE UNTIL PROMPTED TO DO SO BY THE E-TUNER SETUP WIZARD. A PROPER BASE MAP CALIBRATION MUST BE LOADED TO THE Pro-Flo 4 ECU BEFORE STARTING THE VEHICLE. REFER TO THE QUICK START GUIDE TO PROPERLY LOAD A BASE MAP INTO YOUR Pro-Flo 4 ECU.

FAN & TACHOMETER OUTPUTS

The main harness has three flying leads near the ECU connector: two outputs for triggering electric fan relays and one output for tachometer signal. All three outputs are GROUND outputs that are rated to 1.5 Amps. Do NOT connect ECU fan outputs directly to electric fans. Fan outputs can only be used to trigger relays – see fan diagrams on the next page.

Tach signal output is 12v square wave. Many old style tachometers require a coil primary signal and may not work with a square wave signal. If tach does not work, try moving tach signal to coil negative post.

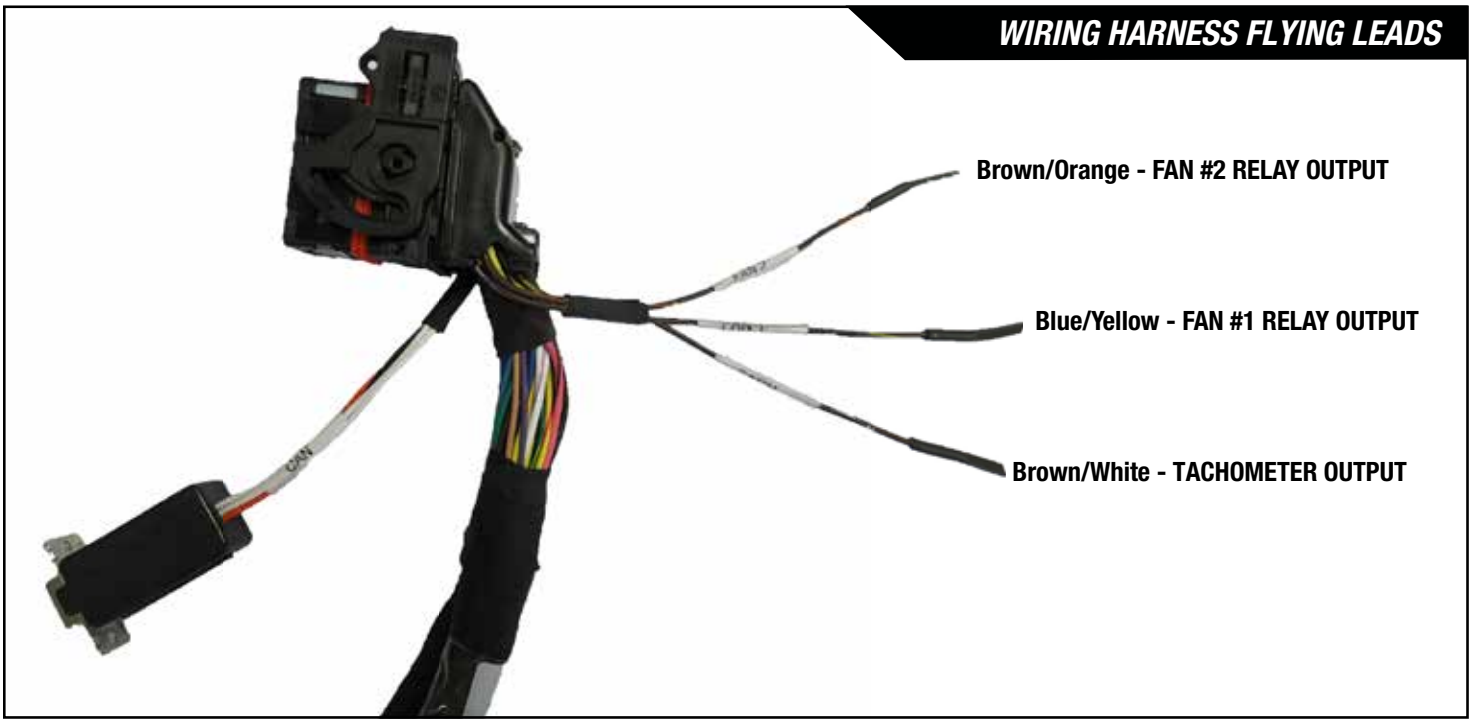

FUEL RELAY DIAGRAM

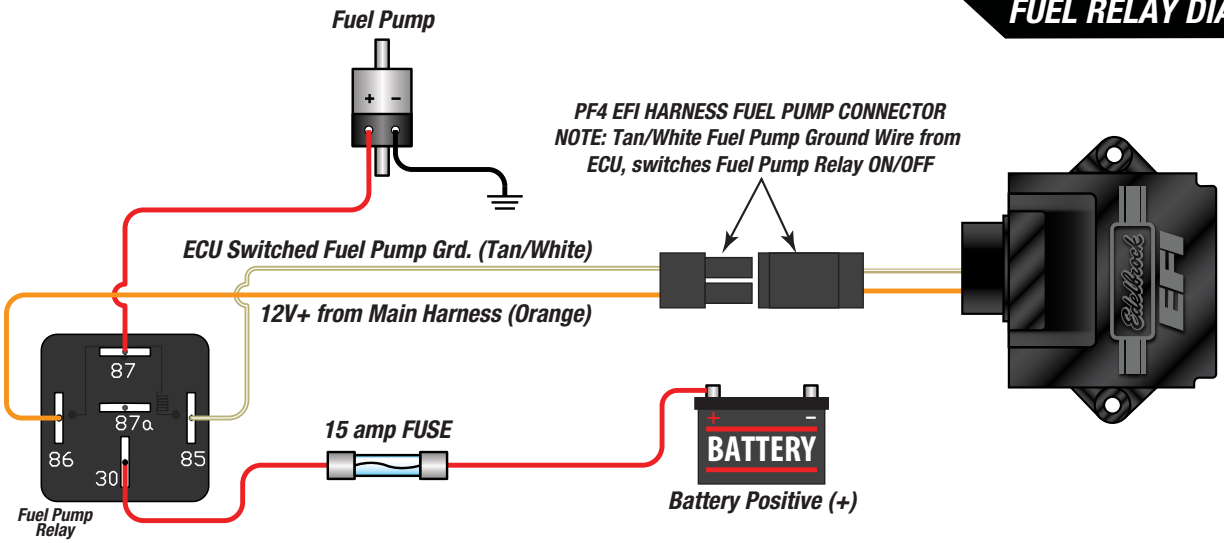

FAN #1 DIAGRAM

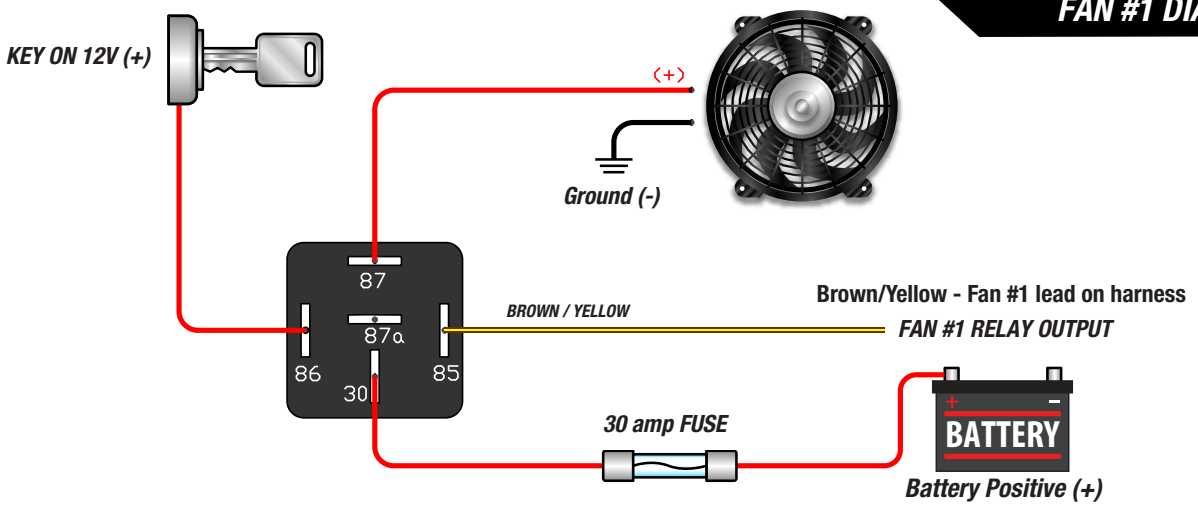

FAN #2 DIAGRAM

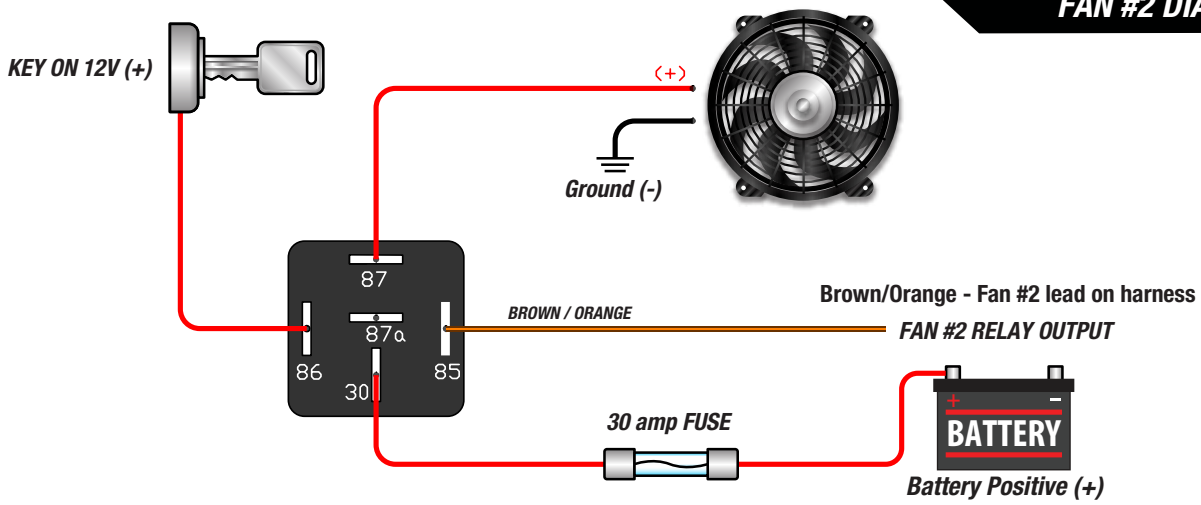

TACHOMETER

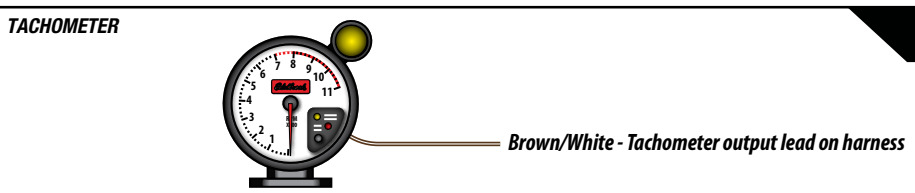

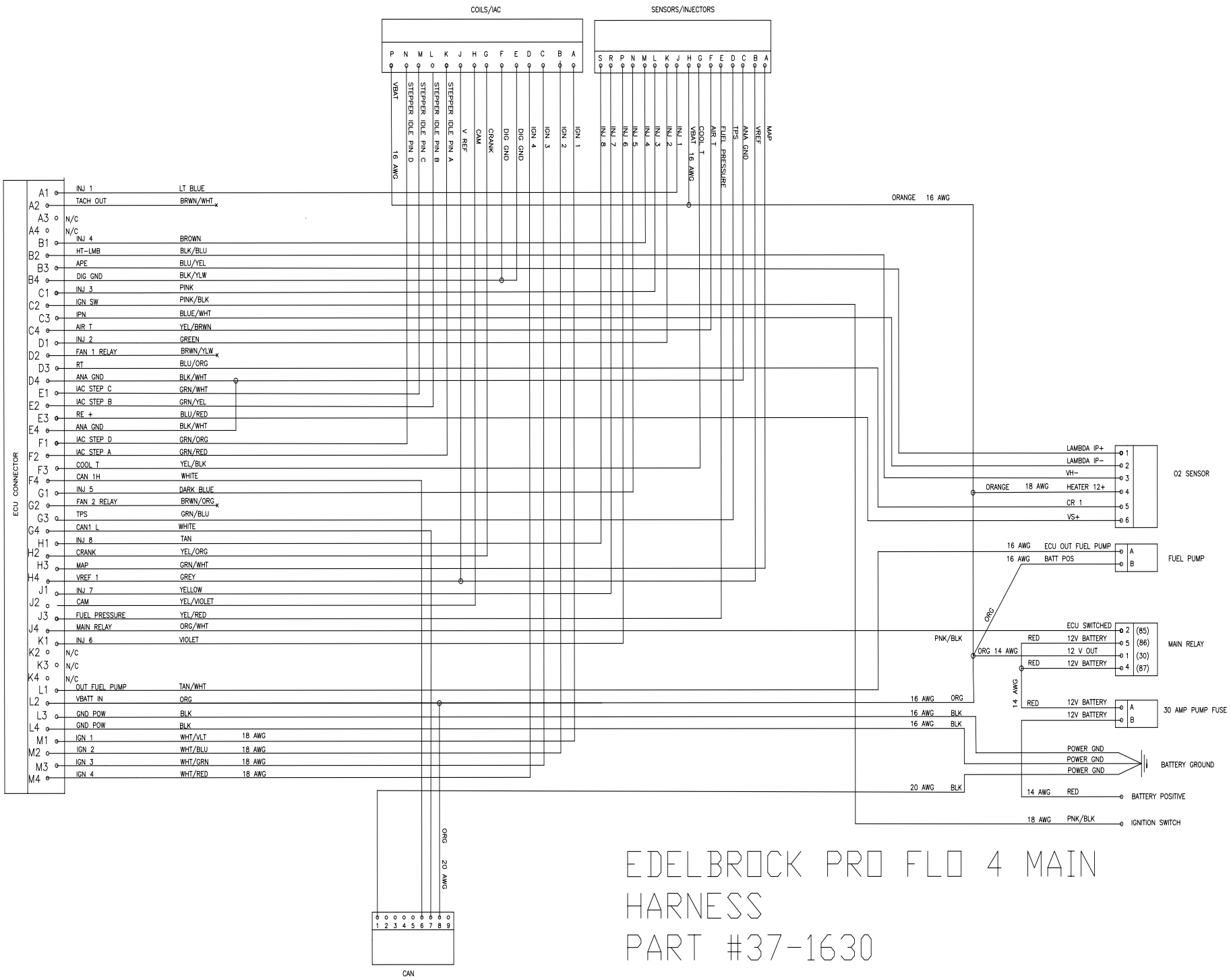

EDELBROCK PRO FLO 4 MAIN HARNESS PART #37-1630

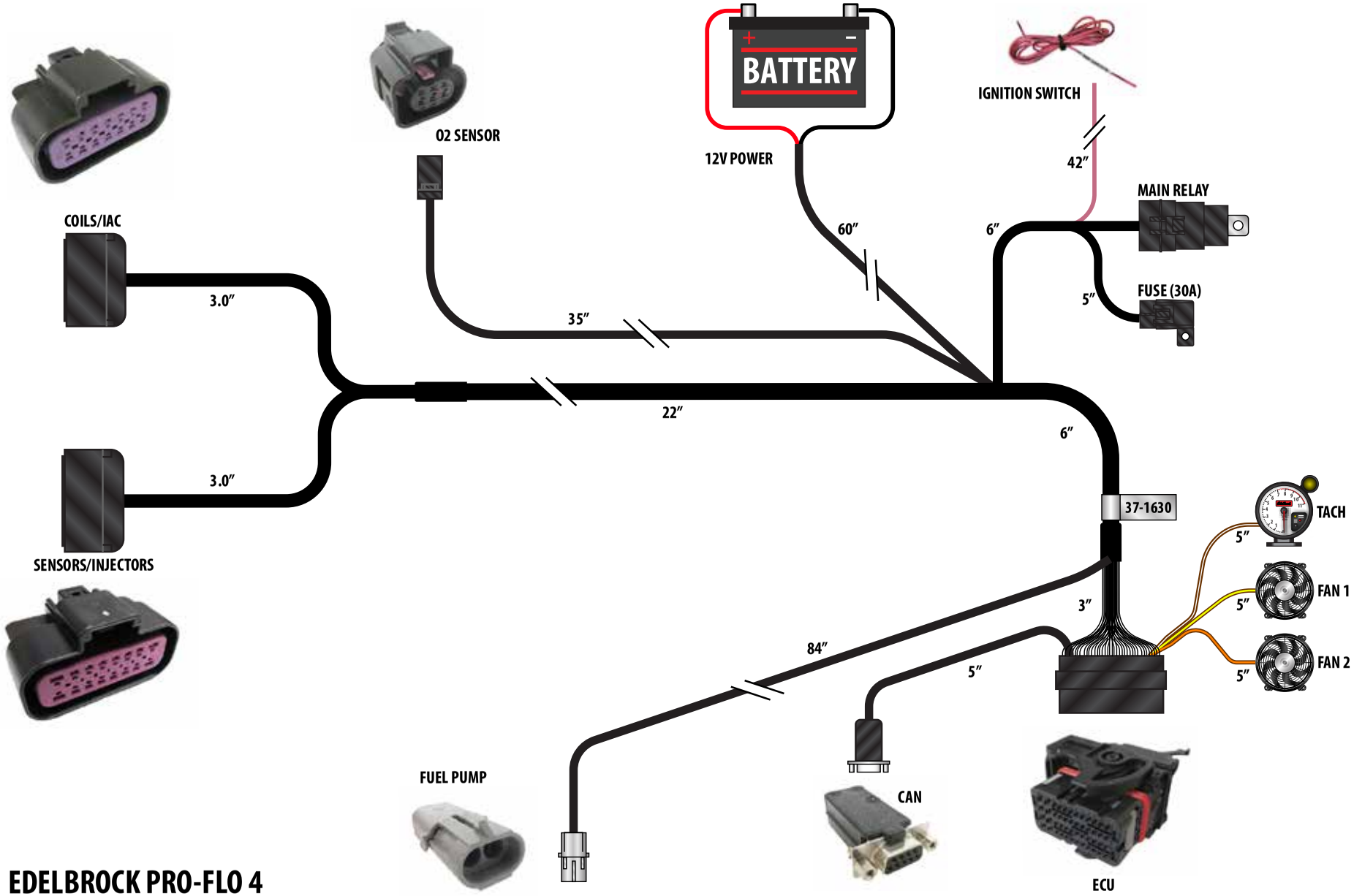

EDELBROCK PRO-FLO 4 MAIN HARNESS PART# 37-1630

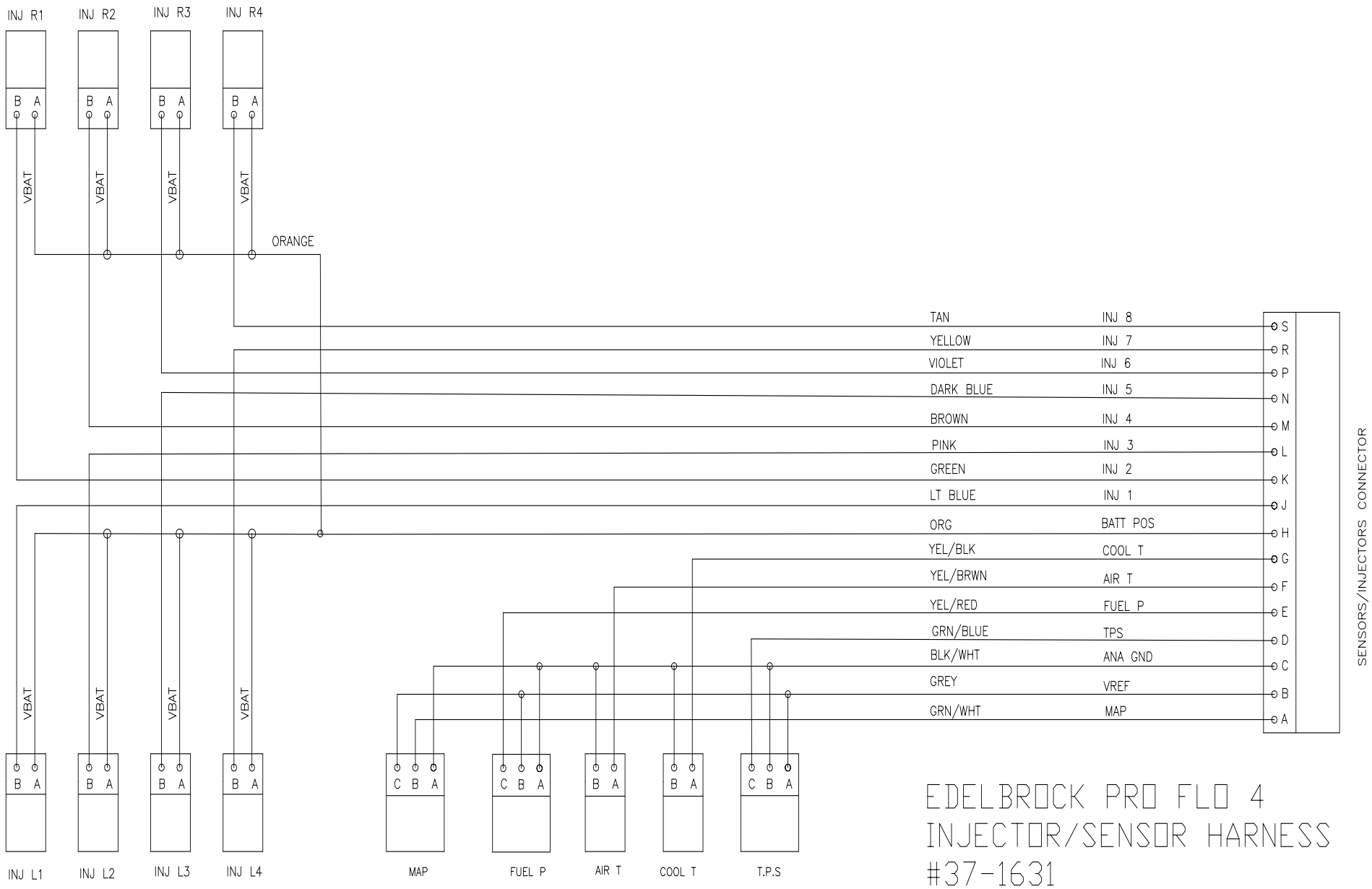

EDELBROCK PRO FLO 4
INJECTOR/SENSOR HARNESS
#37-1631

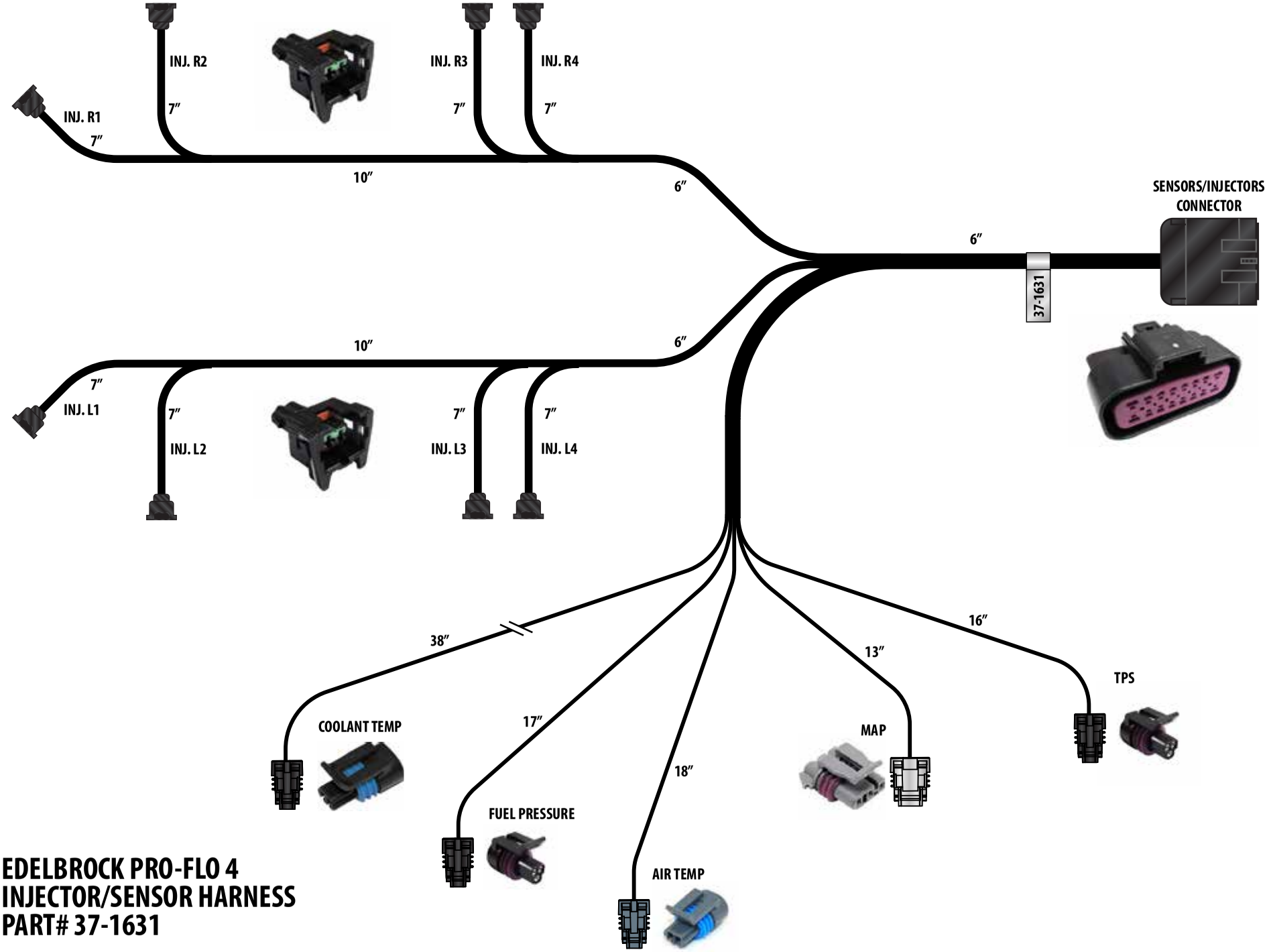

EDELBROCK PRO-FLO 4 INJECTOR/SENSOR HARNESS PART# 37-1631

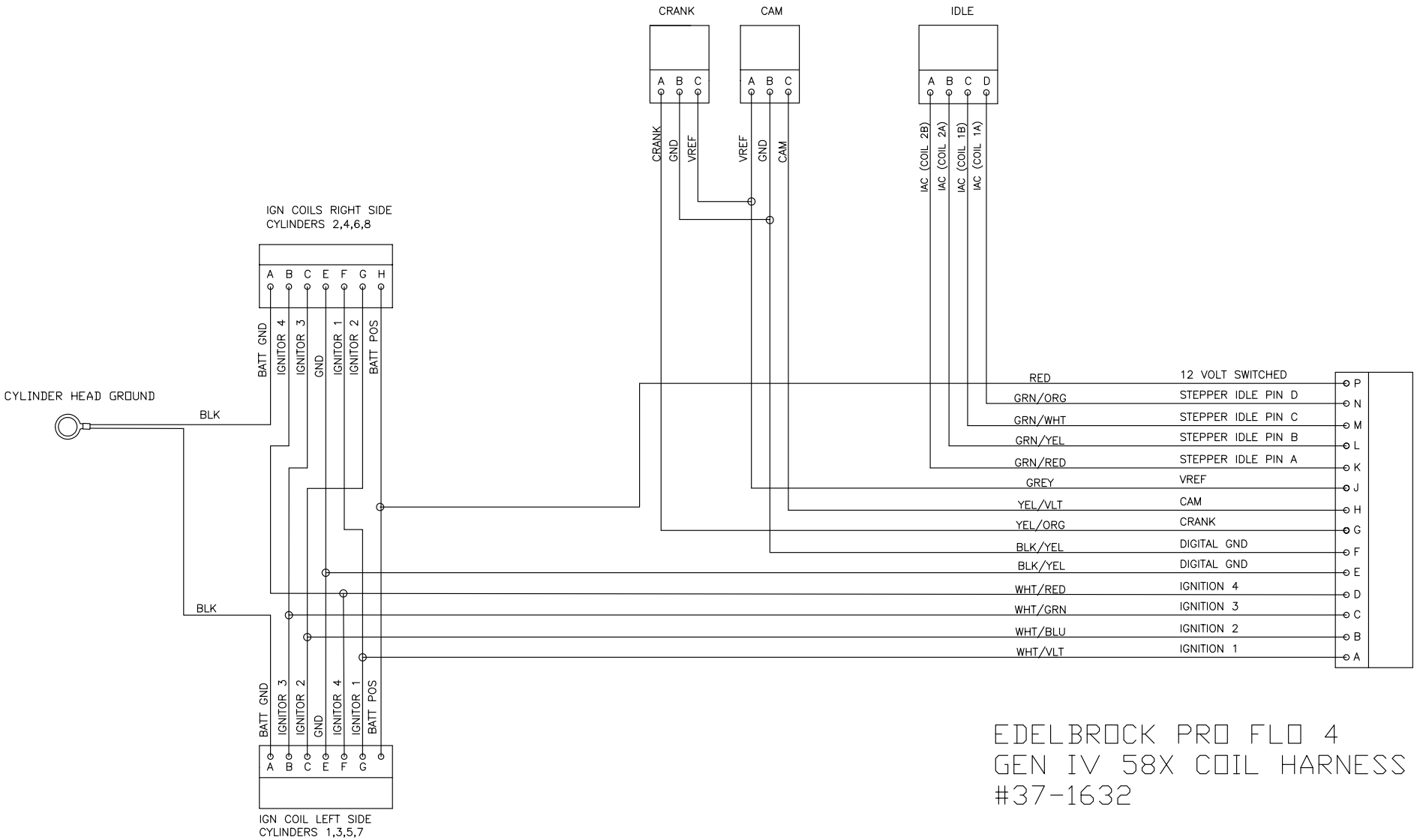

EDELBROCK PRO FLO 4
GEN IV 58X COIL HARNESS
#37-1632

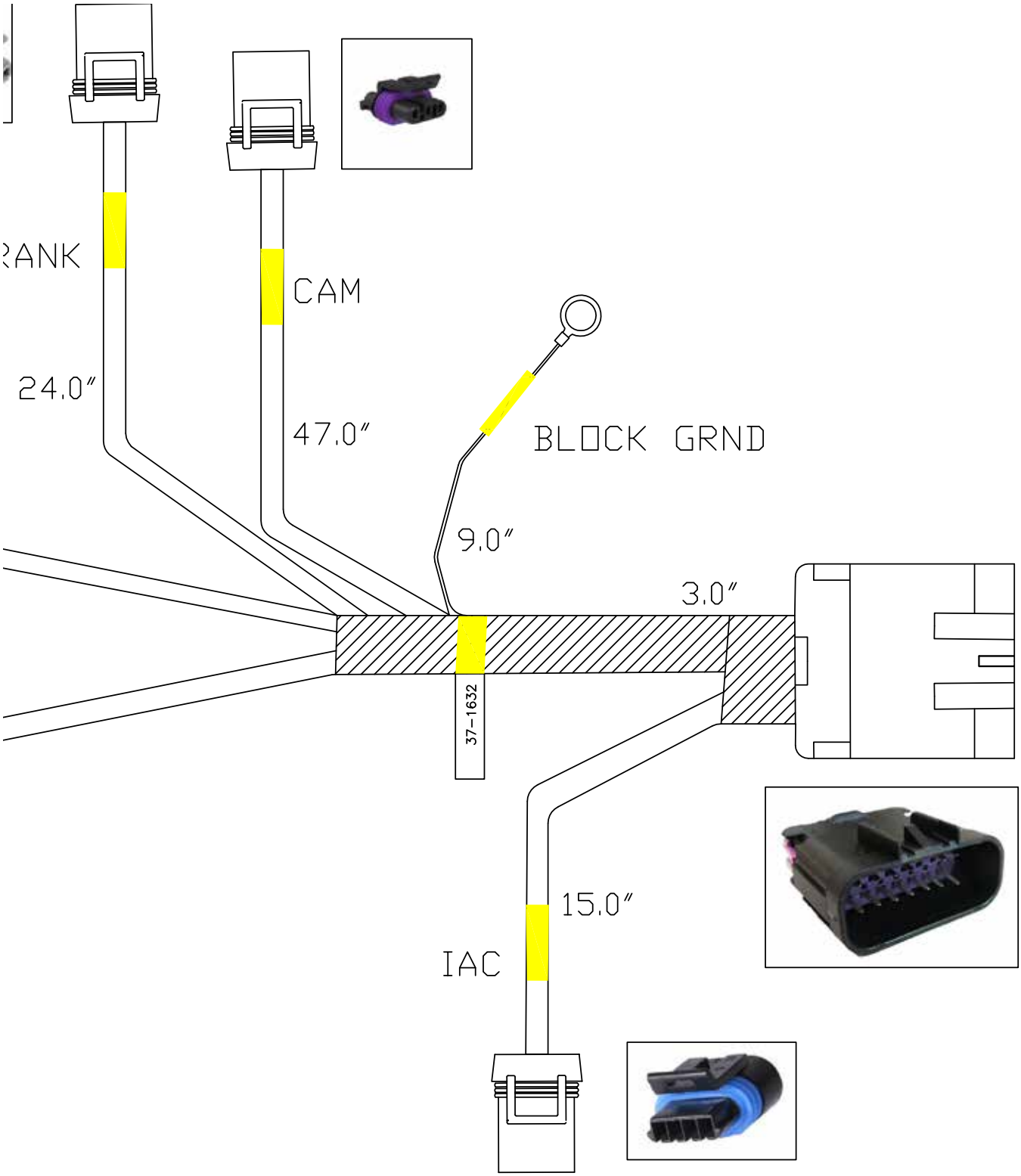

EDELBROCK PRO FLO 4
GEN IV 58X COIL HARNESS
#37-1632

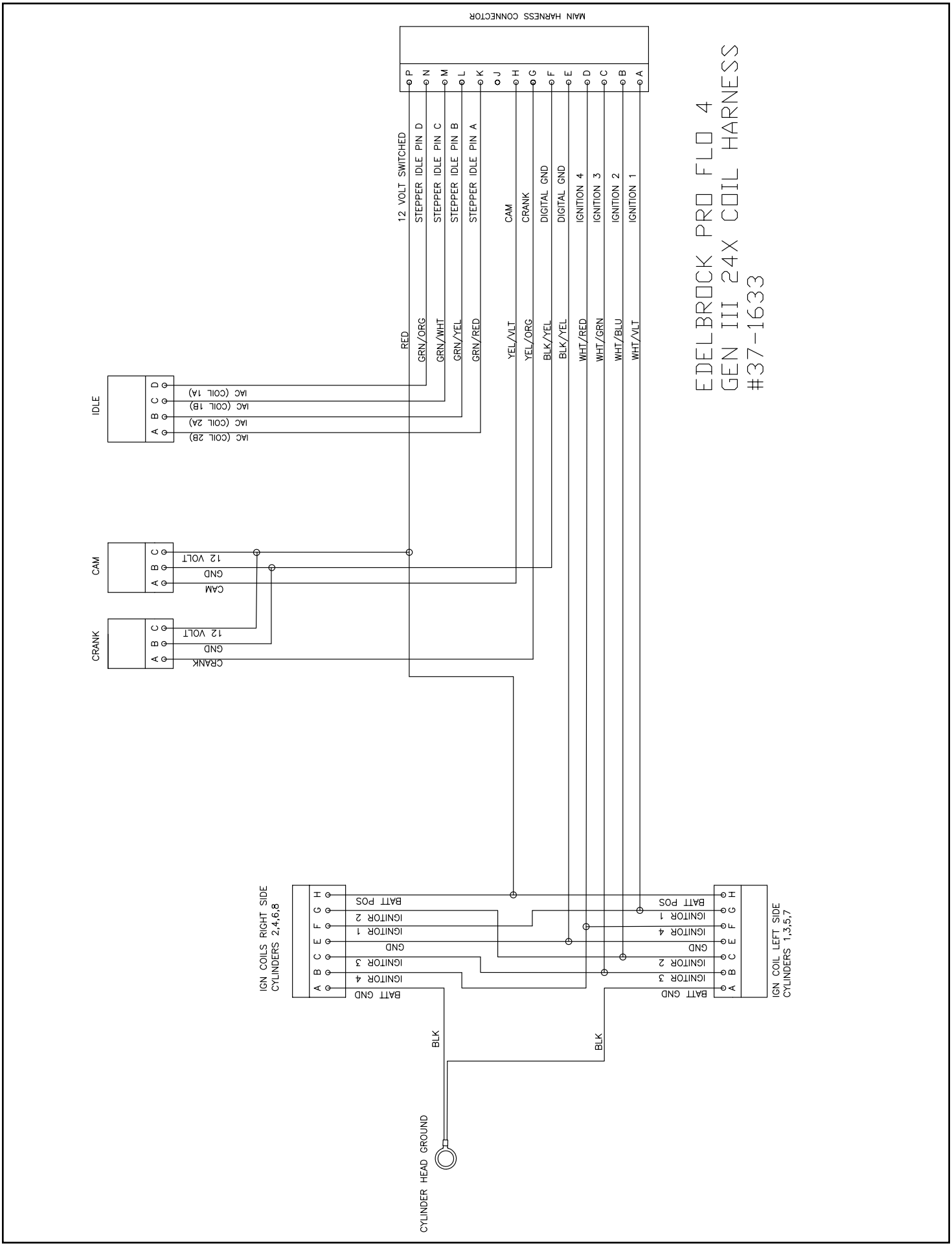
EDELBROCK PRO FLO 4
GEN III 24X COIL HARNESS
#37-1633
MAIN HARNESS CONNECTOR
P N M L K J H G F E D C B A
12 VOLT SWITCHED
STEPPER IDLE PIN D
STEPPER IDLE PIN C
STEPPER IDLE PIN B
STEPPER IDLE PIN A
CAM
CRANK
DIGITAL GND
DIGITAL GND
IGNITION 4
IGNITION 3
IGNITION 2
IGNITION 1
RED
GRN/ORG
GRN/WHT
GRN/YEL
GRN/RED
YEL/VLT
YEL/ORG
BLK/YEL
BLK/YEL
WHT/RED
WHT/GRN
WHT/BLU
WHT/VLT
IDLE
A B C D
IAC (COIL 1A)
IAC (COIL 1B)
IAC (COIL 2A)
IAC (COIL 2B)
CAM
A B C
CAM
GND
12 VOLT
CRANK
A B C
CRANK
GND
12 VOLT
IGN COILS RIGHT SIDE
CYLINDERS 2,4,6,8
A B C E F G H
BATT GND
IGNITOR 4
IGNITOR 3
GND
IGNITOR 1
IGNITOR 2
BATT POS
IGN COIL LEFT SIDE
CYLINDERS 1,3,5,7
A B C E F G H
BATT GND
IGNITOR 3
IGNITOR 2
GND
IGNITOR 4
IGNITOR 1
BATT POS
BLK
BLK
CYLINDER HEAD GROUND

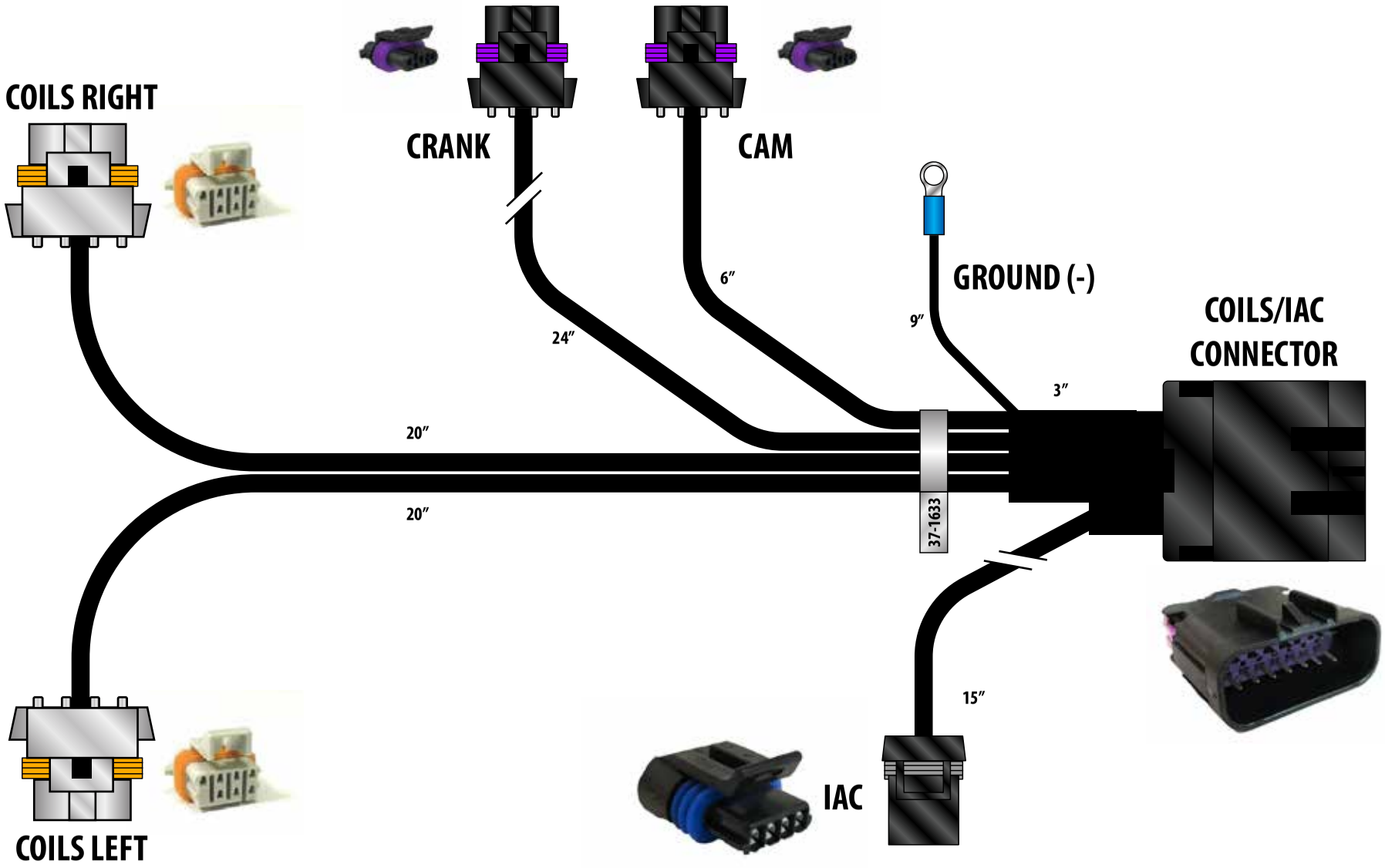

EDELBROCK PRO-FLO 4
GEN III 24X COIL HARNESS
PART# 37-1633

PRO FLO 4 EFI LS 24X SETUP WIZARD MAP MATRIX

CAL. I.D	FUEL SYSTEM TYPE	CUBIC INCHES RANGE	CATEGORY	CAMSHAFT DURATION @ 0.050 LIFT	GAUGE PRESSURE. IDLE VACUUM	INJECTOR SIZE	HP Level
6000	RETURN/SUMP 58 PSI	260-320	STOCK	210 OR LESS	20.0 - 16.0	26	400
6001	RETURN/SUMP 43 PSI	260-320	STOCK	210 OR LESS	20.0 - 16.0	29	400
6002	RETURN/SUMP 58 PSI	260-320	STOCK	210 OR LESS	20.0 - 16.0	29	450
6003	RETURN/SUMP 43 PSI	260-320	MILD	210 TO 230 DEG.	16.0 - 12.0	29	400
6004	RETURN/SUMP 58 PSI	260-320	MILD	210 TO 230 DEG.	16.0 - 12.0	29	450
6005	RETURN/SUMP 43 PSI	260-320	RACE	230 OR GREATER	12.0 - 5.0	29	400
6006	RETURN/SUMP 58 PSI	260-320	RACE	230 OR GREATER	12.0 - 5.0	29	450
6007	RETURN/SUMP 58 PSI	321-345	STOCK	210 OR LESS	20.0 - 16.0	26	400
6008	RETURN/SUMP 43 PSI	321-345	STOCK	210 OR LESS	20.0 - 16.0	29	400
6009	RETURN/SUMP 58 PSI	321-345	STOCK	210 OR LESS	20.0 - 16.0	29	450
6010	RETURN/SUMP 43 PSI	321-345	MILD	210 TO 230 DEG.	16.0 - 12.0	29	400
6011	RETURN/SUMP 58 PSI	321-345	MILD	210 TO 230 DEG.	16.0 - 12.0	29	450
6012	RETURN/SUMP 43 PSI	321-345	MILD	210 TO 230 DEG.	16.0 - 12.0	35	450
6013	RETURN/SUMP 58 PSI	321-345	MILD	210 TO 230 DEG.	16.0 - 12.0	35	550
6014	RETURN/SUMP 43 PSI	321-345	RACE	230 OR GREATER	12.0 - 5.0	35	450
6015	RETURN/SUMP 58 PSI	321-345	RACE	230 OR GREATER	12.0 - 5.0	35	550
6016	RETURN/SUMP 43 PSI	346-360	STOCK	210 OR LESS	20.0 - 16.0	35	450
6017	RETURN/SUMP 58 PSI	346-360	STOCK	210 OR LESS	20.0 - 16.0	35	550
6018	RETURN/SUMP 43 PSI	346-360	MILD	210 TO 230 DEG.	16.0 - 12.0	35	450
6019	RETURN/SUMP 58 PSI	346-360	MILD	210 TO 230 DEG.	16.0 - 12.0	35	550
6020	RETURN/SUMP 43 PSI	346-360	RACE	230 OR GREATER	12.0 - 5.0	35	450
6021	RETURN/SUMP 58 PSI	346-360	RACE	230 OR GREATER	12.0 - 5.0	35	550
6022	RETURN/SUMP 43 PSI	361-430	STOCK	210 OR LESS	20.0 - 16.0	29	400
6023	RETURN/SUMP 58 PSI	361-430	STOCK	210 OR LESS	20.0 - 16.0	29	450
6024	RETURN/SUMP 58 PSI	361-430	MILD	210 TO 230 DEG.	16.0 - 12.0	42	650
6025	RETURN/SUMP 58 PSI	361-430	MILD	210 TO 230 DEG.	16.0 - 12.0	35	550
6026	RETURN/SUMP 58 PSI	361-430	RACE	230 OR GREATER	12.0 - 5.0	42	650
6027	RETURN/SUMP 43 PSI	361-430	RACE	230 OR GREATER	12.0 - 5.0	60	775

PRO FLO 4 EFI LS 58X SETUP WIZARD MAP MATRIX

CAL. I.D	FUEL SYSTEM TYPE	CUBIC INCHES RANGE	CATEGORY	CAMSHAFT DURATION @ 0.050 LIFT	GAUGE PRESSURE. IDLE VACUUM	INJECTOR SIZE	HP Level
7000	RETURN/SUMP 58 PSI	260-320	STOCK	210 OR LESS	20.0 - 16.0	26	400
7001	RETURN/SUMP 43 PSI	260-320	STOCK	210 OR LESS	20.0 - 16.0	29	400
7002	RETURN/SUMP 58 PSI	260-320	STOCK	210 OR LESS	20.0 - 16.0	29	450
7003	RETURN/SUMP 43 PSI	260-320	MILD	210 TO 230 DEG.	16.0 - 12.0	29	400
7004	RETURN/SUMP 58 PSI	260-320	MILD	210 TO 230 DEG.	16.0 - 12.0	29	450
7005	RETURN/SUMP 43 PSI	260-320	RACE	230 OR GREATER	12.0 - 5.0	29	400
7006	RETURN/SUMP 58 PSI	260-320	RACE	230 OR GREATER	12.0 - 5.0	29	450
7007	RETURN/SUMP 58 PSI	321-345	STOCK	210 OR LESS	20.0 - 16.0	26	400
7008	RETURN/SUMP 43 PSI	321-345	STOCK	210 OR LESS	20.0 - 16.0	29	400
7009	RETURN/SUMP 58 PSI	321-345	STOCK	210 OR LESS	20.0 - 16.0	29	450
7010	RETURN/SUMP 43 PSI	321-345	MILD	210 TO 230 DEG.	16.0 - 12.0	29	400
7011	RETURN/SUMP 58 PSI	321-345	MILD	210 TO 230 DEG.	16.0 - 12.0	29	450
7012	RETURN/SUMP 43 PSI	321-345	MILD	210 TO 230 DEG.	16.0 - 12.0	35	450
7013	RETURN/SUMP 58 PSI	321-345	MILD	210 TO 230 DEG.	16.0 - 12.0	35	550
7014	RETURN/SUMP 43 PSI	321-345	RACE	230 OR GREATER	12.0 - 5.0	35	450
7015	RETURN/SUMP 58 PSI	321-345	RACE	210 TO 230 DEG.	16.0 - 12.0	35	550
7016	RETURN/SUMP 43 PSI	346-360	STOCK	210 OR LESS	20.0 - 16.0	35	450
7017	RETURN/SUMP 58 PSI	346-360	STOCK	210 OR LESS	20.0 - 16.0	35	550
7018	RETURN/SUMP 43 PSI	346-360	MILD	210 TO 230 DEG.	16.0 - 12.0	35	450
7019	RETURN/SUMP 58 PSI	346-360	MILD	210 TO 230 DEG.	16.0 - 12.0	35	550
7020	RETURN/SUMP 43 PSI	346-360	RACE	230 OR GREATER	12.0 - 5.0	35	450
7021	RETURN/SUMP 58 PSI	346-360	RACE	230 OR GREATER	12.0 - 5.0	35	550
7022	RETURN/SUMP 43 PSI	361-430	STOCK	210 OR LESS	20.0 - 16.0	29	400
7023	RETURN/SUMP 58 PSI	361-430	STOCK	210 OR LESS	20.0 - 16.0	29	450
7024	RETURN/SUMP 58 PSI	361-430	MILD	210 TO 230 DEG.	16.0 - 12.0	42	650
7025	RETURN/SUMP 58 PSI	361-430	MILD	210 TO 230 DEG.	16.0 - 12.0	35	550
7026	RETURN/SUMP 58 PSI	361-430	RACE	230 OR GREATER	12.0 - 5.0	42	650
7027	RETURN/SUMP 43 PSI	361-430	RACE	230 OR GREATER	12.0 - 5.0	60	775

Learn more about fuel systems on our website.