REVISION HISTORY		
REV.	DESCRIPTION	DATE
A	INITIAL RELEASE PER P10023	2015-07-10
B	REVISE PER P10023	2015-10-12
C	REVISE PER P10023	2015-12-29

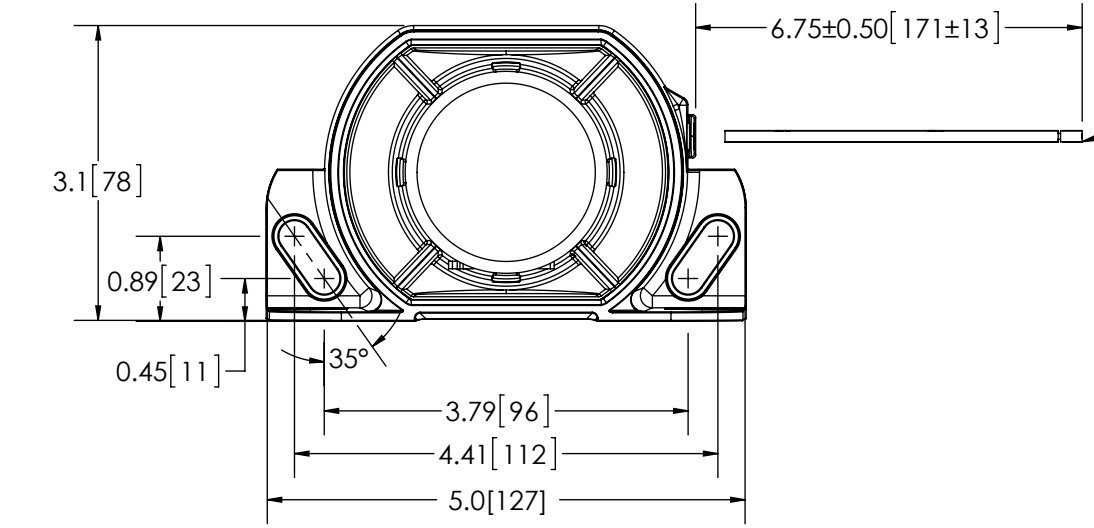

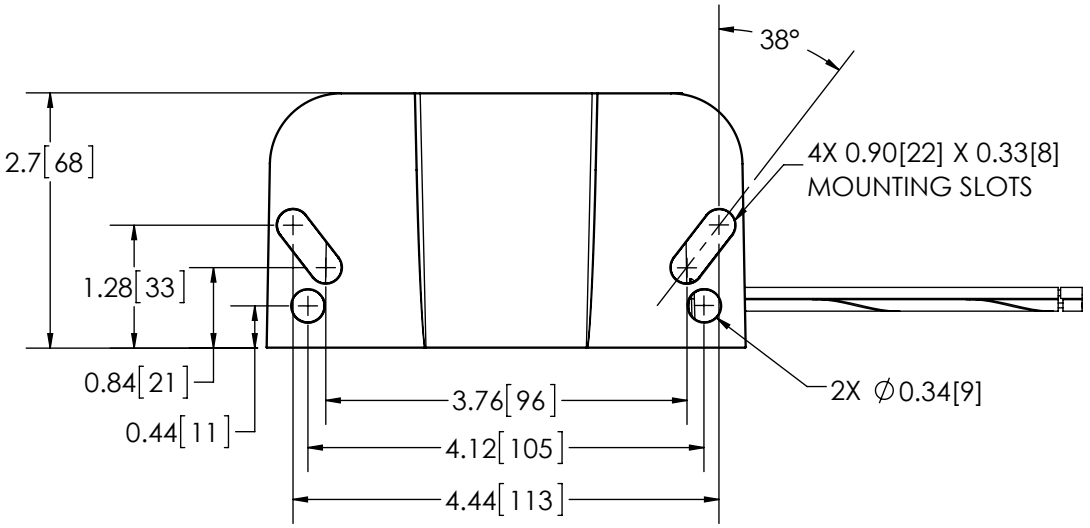

SPECIFICATIONS

1. CERTIFICATIONS: CE; UL; ECE R10; IP64D
   Note: Unique components, accessories, and hardware kits are not typically Included in the Product Certification Test Protocols. Unless otherwise Specified, the Product Certifications referred to herein are predicated upon the base product model configuration.
2. SOUND PRESSURE LEVEL: 82 to 102 ± 4 dB (A) @ 1.2m (4ft)
3. VOLTAGE (NOMINAL): 12 to 48 VDC
4. VOLTAGE (EXTREME): 9.0 to 55.0 VDC
5. CURRENT (PEAK): 0.2 A (@ 12 VDC NOMINAL)
6. POWER (MAXIMUM): 9 W (@ 12 VDC NOMINAL)
7. TEMPERATURE RANGE: -40°F (-40°C) TO 185°F (85°C)
8. FREQUENCY: 700 to 2800 Hz
9. CONNECTION: 2-16 AWG WIRES
10. RECOMMENDED MOUNTING: 5/16-18 UNC, GRADE 5 OR BETTER; 5/16" TYPE A, SERIES N OR W WASHER
11. HOUSING MATERIAL: GLASS-FILLED NYLON
12. PRODUCT WEIGHT: 1.0 LBS (0.45 Kg)

NOTES:
1. DIMENSIONS IN INCHES[MILLIMETERS (FOR REFERENCE)]

NON DISCLOSURE AGREEMENT
THIS DRAWING AND THE DESIGN IT DISCLOSES ARE THE PRIVATE PROPERTY OF ESG AND IS ISSUED IN CONFIDENCE FOR ENGINEERINGINFORMATION ONLY. THE DRAWING AND / OR DESIGN MAY NOT BE USED, COPIED, REPRODUCED, OR OTHERWISE DISCLOSED IN PART OR AS A WHOLE TO OUTSIDERS OR USED FOR ANY OTHER PURPOSE WITHOUT THE PRIOR WRITTEN CONSENT OF ESG. THE DRAWING IS SUBJECT TO RECALL AT ANY TIME. YOUR POSSESSION OF THIS DOCUMENT CONSTITUTES ACCEPTANCE OF THESE TERMS. © 2015 ECCO

SCALE 1:2

CAD GENERATED DRAWING
DO NOT MANUALLY UPDATE.
MODEL REFERENCED:A

TOLERANCES ARE IN INCHES, AND MILLIMETERS
TOLERANCES UNLESS OTHERWISE STATED ARE:

MILLIMETERS DECIMALS	INCHES DECIMALS	ANGLES
XX. ± 1.0mm XX.X ± 0.5mm	X.X ± 0.1 X.XX ± 0.04 X.XXX ± 0.02	± 0.5° FRACTIONS ± 1/64

THIRD ANGLE PROJECTION

APPROVALS		DATE
DRAWN BY	ABB	2015-10-23
CHECKED	MDH	2015-10-26
MECH. ENG.	JLA	2015-10-23
ELEC. ENG.	JES	2015-10-26
TEST ENG.	JRT	2015-10-28
SALES.	JPT	2015-10-26

Electronically Controlled Use Latest Copy

ECCO®

ALARM,SMART,82-102DBA,12-48VDC,GFN

CUSTOMER PART NO.	PRODUCT SERIES:
SA931N	SA931

SIZE:	DWG. NO.	REV.
A	SA931N	C

SHEET 1 OF 1 | Project: P10023 | Date Created: 2015-05-21