FRONT & SIDE VIEW

# MODEL DL1800A

1800lb/817kg CAPACITY
PULLING WINCH

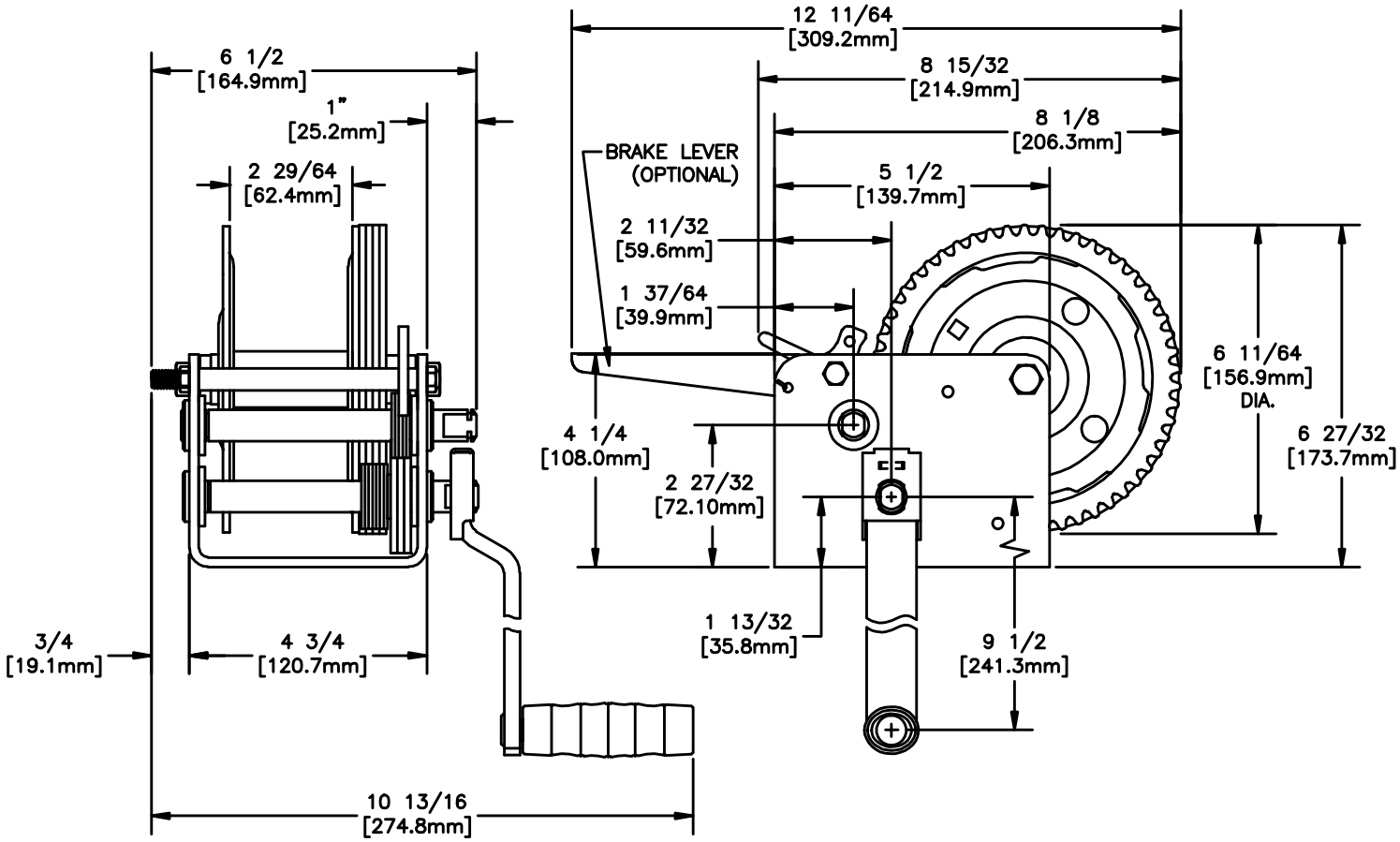


BASE HOLE PATTERN

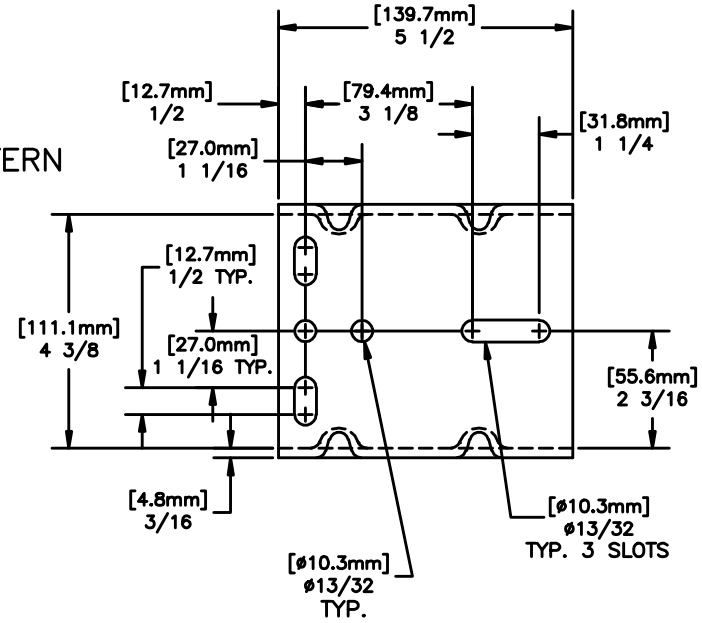


Shop for quality Dutton Lainson products on our website.

Discover various winches accessories in our online store.