FRONT & SIDE VIEW

MODEL DL1402A

1400lb/636kg CAPACITY
PULLING WINCH

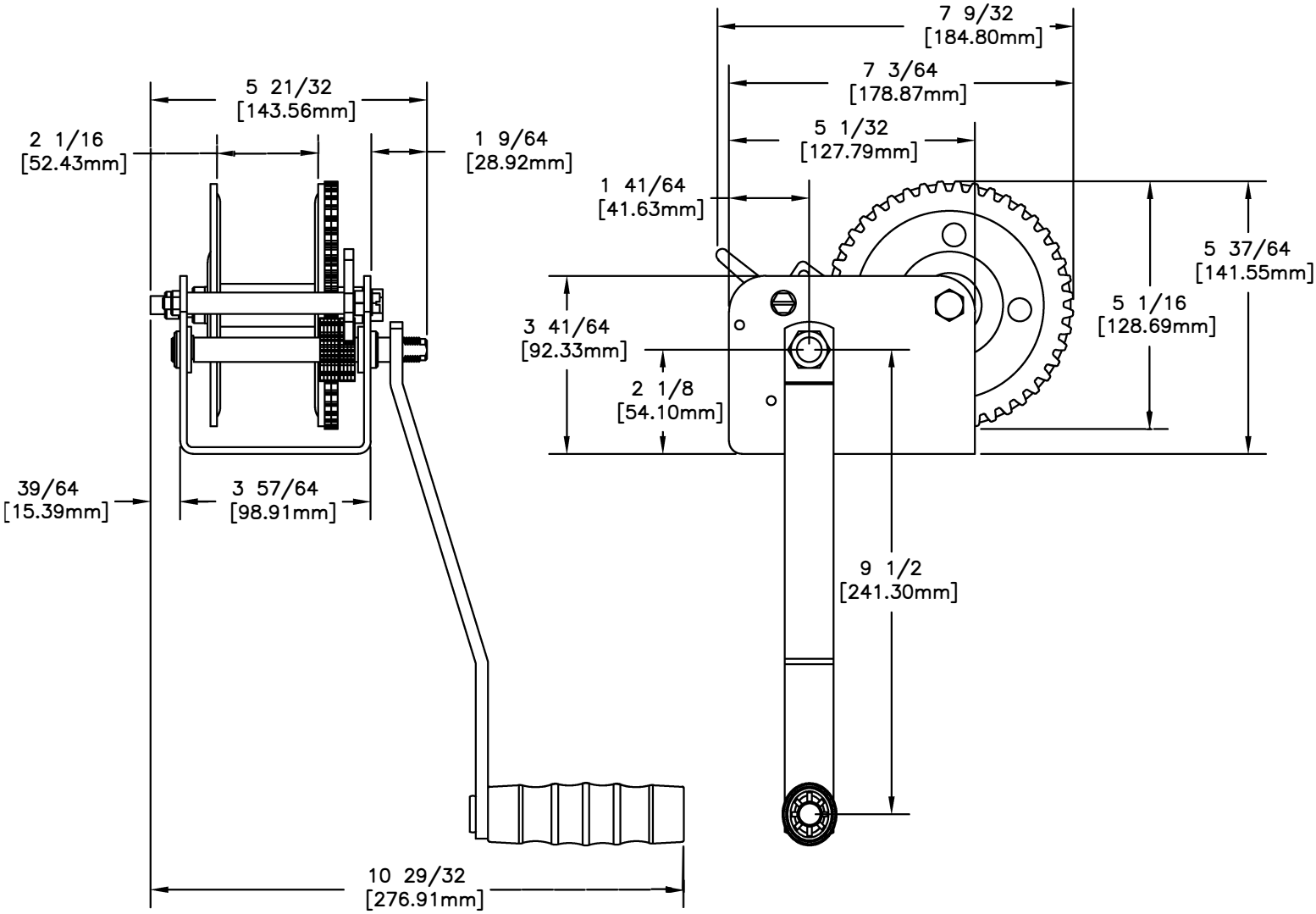

BASE HOLE PATTERN

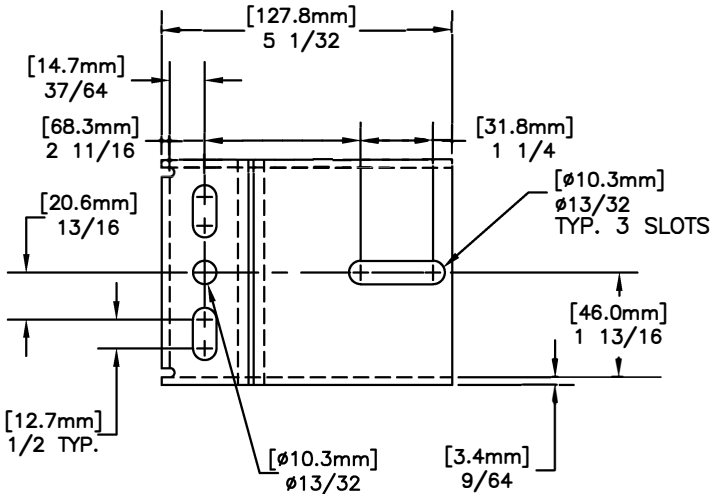

Learn more about winches on our website.