MODEL
B1500/B1502
1500lb/681kg CAPACITY
BRAKE WINCH

FRONT & SIDE VIEW

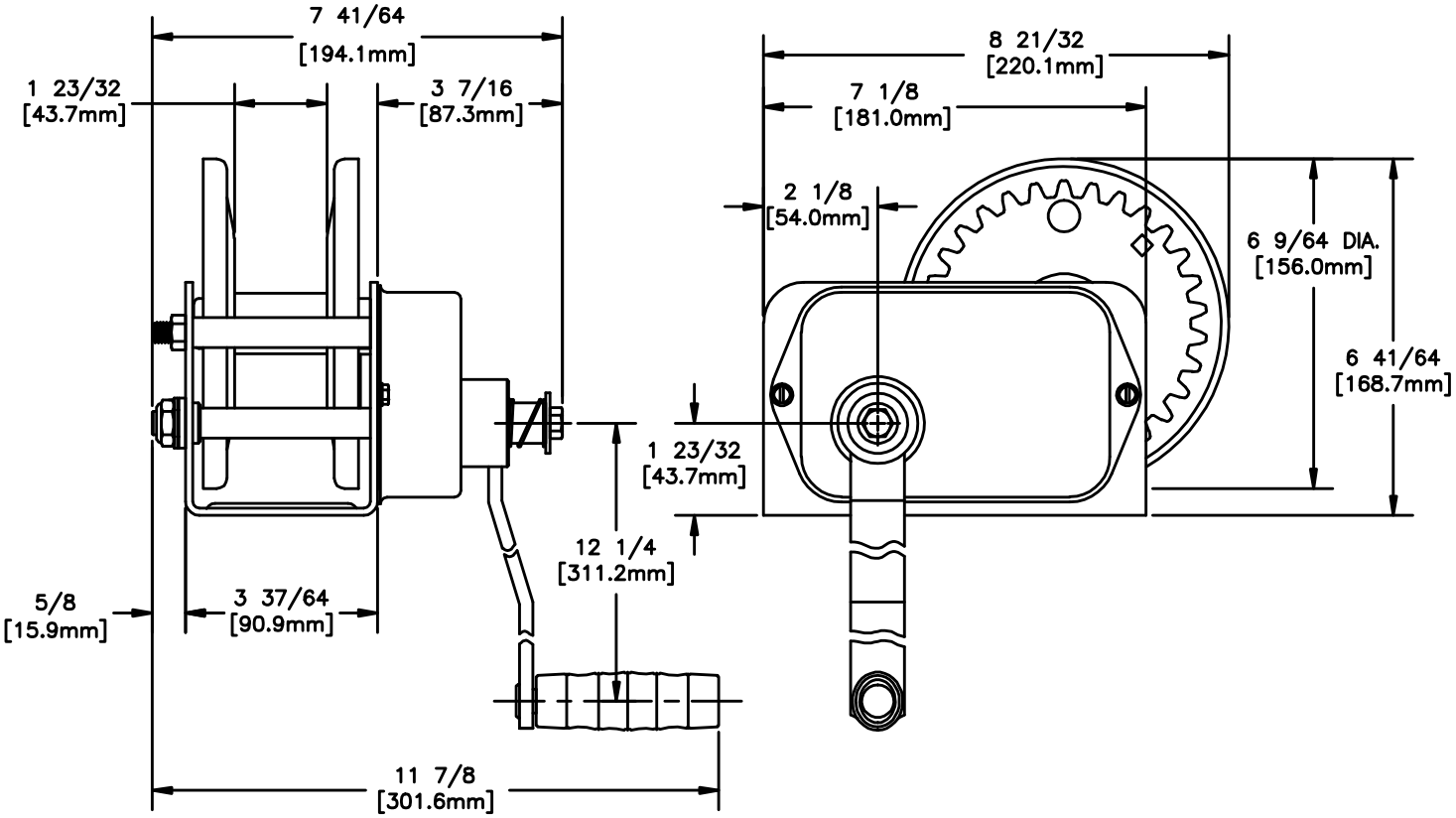

BASE HOLE PATTERN

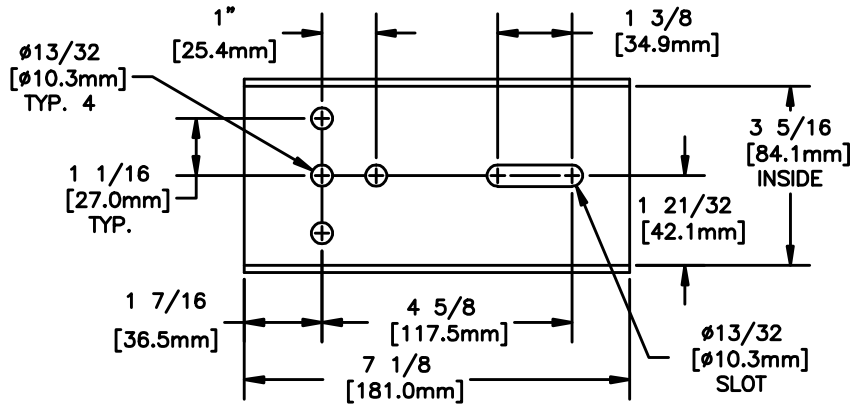

Looking for dependable winches and accessories? Rely on Dutton Lainson for quality and long-lasting products.