FRONT & SIDE VIEW

MODEL DL2000A

2000lb/908kg CAPACITY
PULLING WINCH

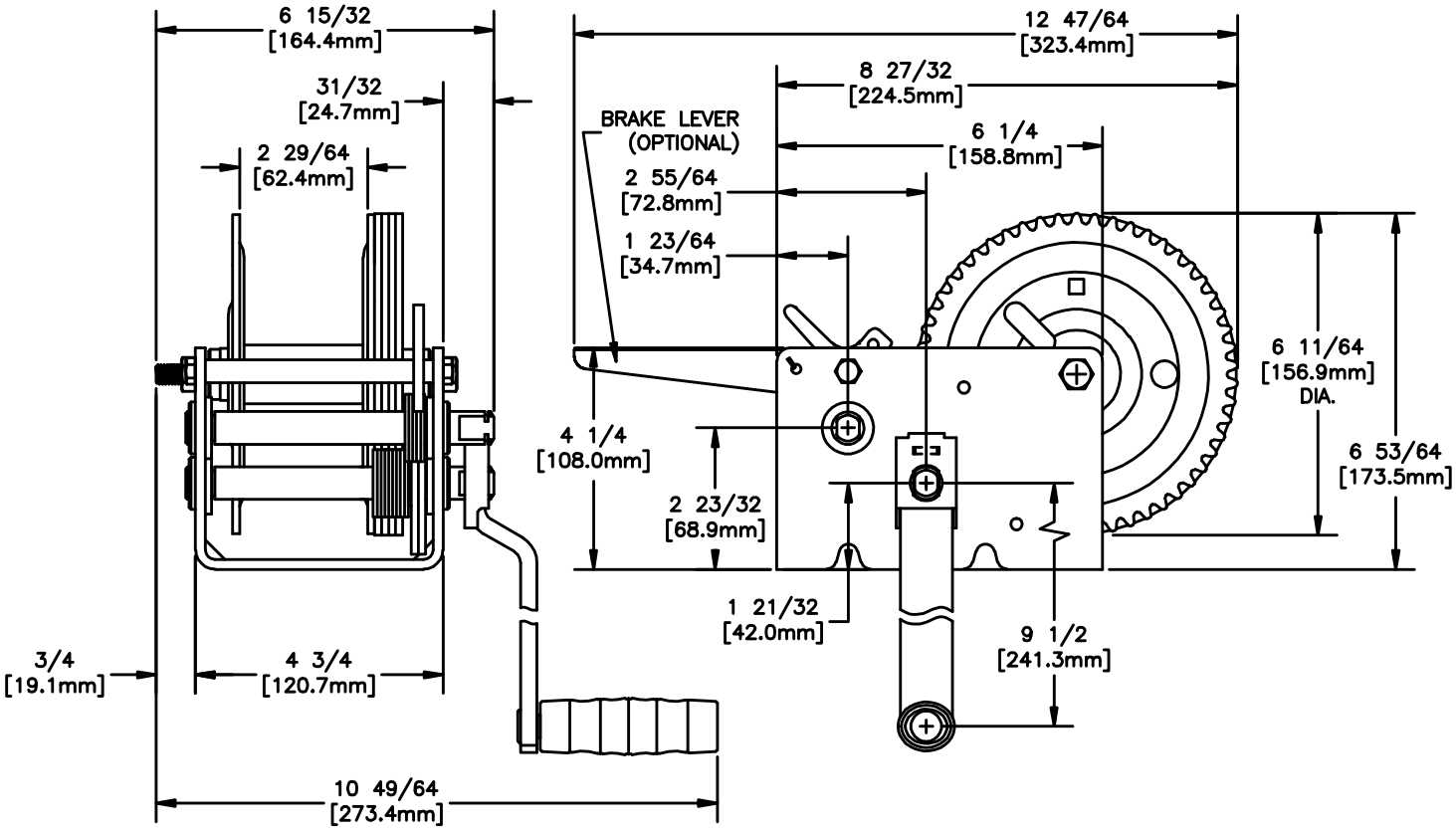

BASE HOLE PATTERN

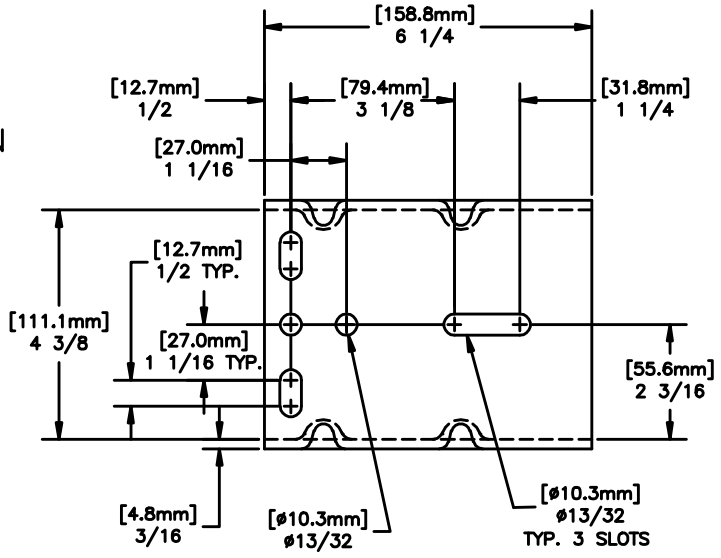

Shop for quality Dutton Lainson products on our website. Discover various winches accessories in our online store.