INSTALLATION INSTRUCTIONS
HIGH OUTPUT SINGLE RAD FANS
PART # 16212, 16214, 16217

Please read these instructions completely before beginning installation

KIT CONTENTS

QTY.	DESCRIPTION	QTY.	DESCRIPTION
1	High output RAD fan	4	Foam pads
4	Straight splined ratchet brackets	4	Mounting rods
4	90° splined ratchet brackets	4	Mounting clips
4	Rubber isolators	8	M6 flat washers
8	M6 x 35mm socket head Bolts	8	M6 square nuts
4	M6 x 12mm Hex head Bolts	4	M6 hex lock nuts

IMPORTANT

This fan assembly is designed for both PULLER and PUSHER APPLICATIONS.
(See Diagram #1)

Diagram #1

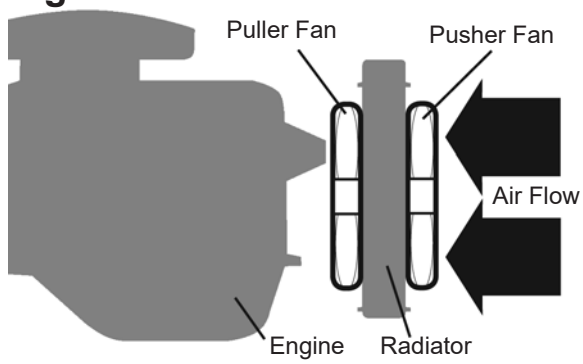

Mounting Options

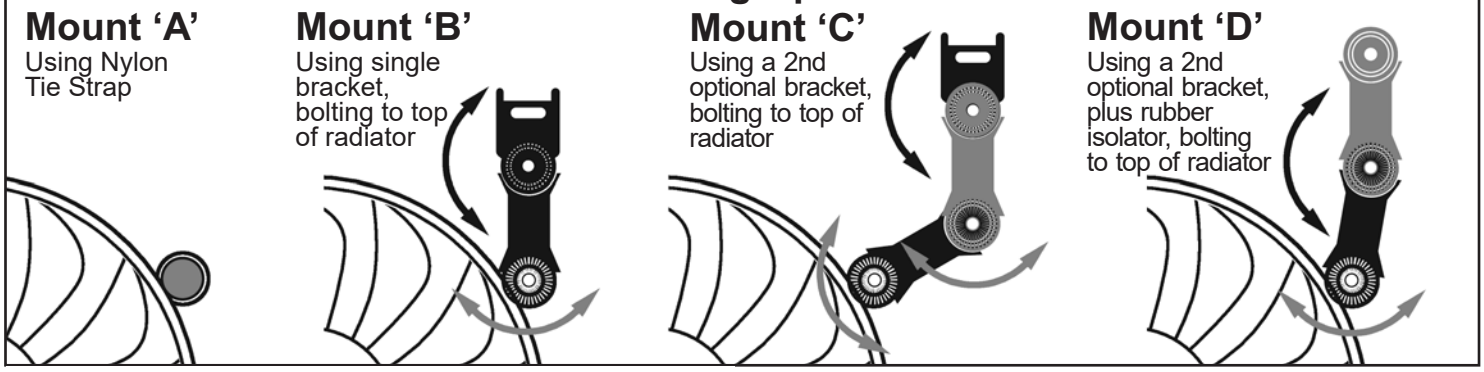

Mount 'A'

Using Nylon Tie Strap

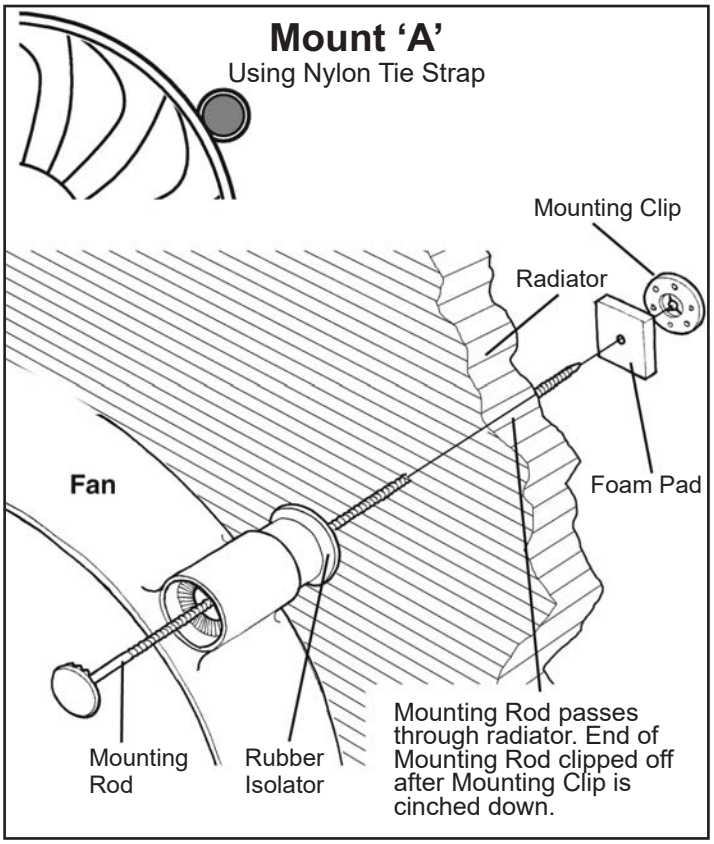

Mount 'B'

Using splined ratchet brackets and 90° splined ratchet brackets, bolt to top of radiator.

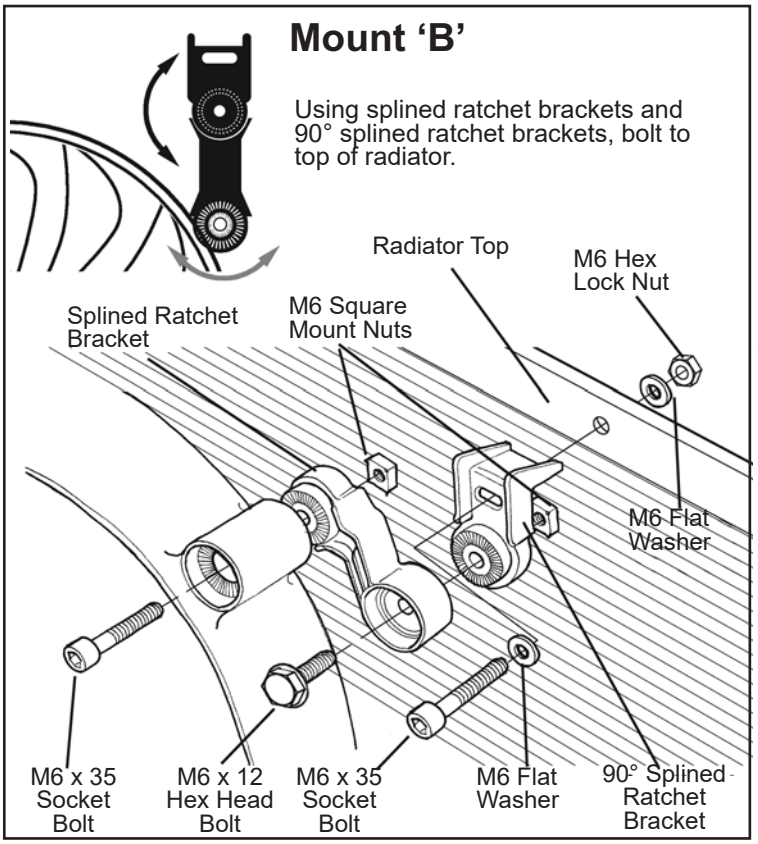

(Continues on reverse side)

Mount ‘C’ or ‘D’

Mount ‘C’

Using a 2nd optional splined ratchet bracket, , bolt to top of radiator.

Mount ‘D’

Using a 2nd optional splined ratchet bracket, plus rubber isolator, bolt to top of radiator.

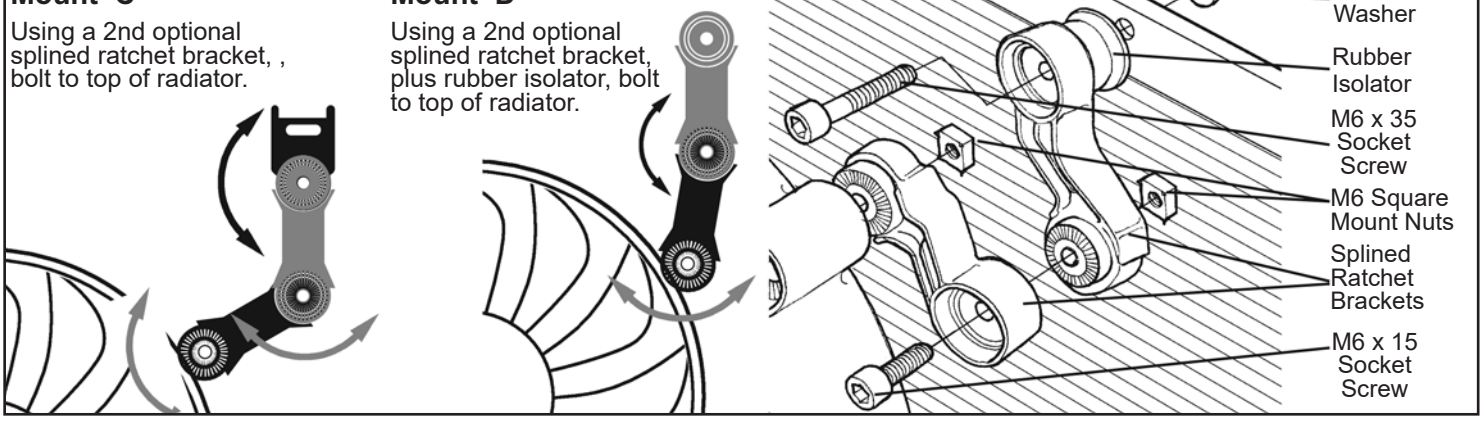

Two fans can be mounted side by side to provide a larger cooling area. Order an extra fan: Part No. 162XX Series and Dual Mount Kit: Part No. 16200 See reverse for detail on mounting diagrams and wiring instructions

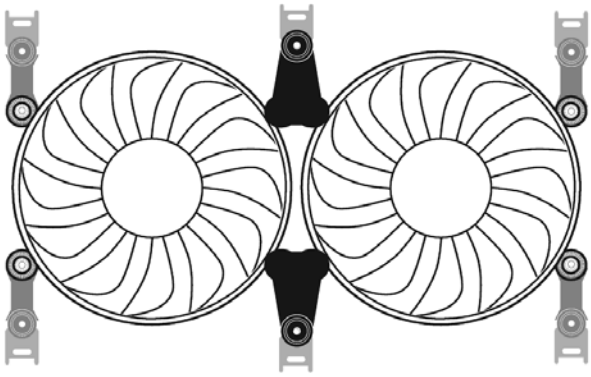

Wiring

Derale has taken it to the next level with our High Output Electric Fans, using a two speed motor which allows you to activate the Low speed function and the High speed functions at different times. Fan efficiency is optimized to give you what you need, when you need it.

To determine which option is best for your specific application, consult a professional or go to: derale.com for wiring options. We recommend using the proper automotive thermostats to activate Low speed at a predetermined temperature and to activate the High speed at a second predetermined temperature.

Wiring for use with both High and Low Speeds

Connect the BLACK wire to a good chassis ground. Connect the GRAY wire (low speed) to a 12 volt SW ITCHED* positive feed. Connect the BROWN wire (high speed) to a 12 volt SW ITCHED* positive feed.

IMPORTANT: High speed function will not operate unless low speed is activated before or at the same time.

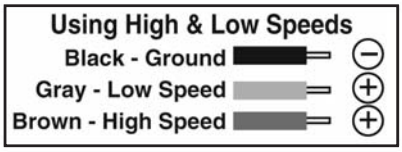

Wiring for Low Speed ONLY

Connect the BLACK wire to a good chassis ground. Connect the GRAY wire (low speed) to a 12 volt SW ITCHED* positive feed.

*SWITCHED means using an automotive rated thermostat or toggle switch.

NOTE: all 12 volt positive feeds should be fused with the appropriate fuse. Always use relays of the correct rating to reduce current draw and wire overload.

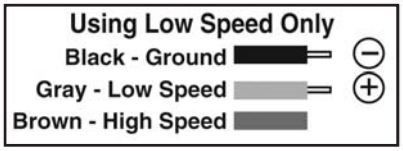

When wiring into a circuit using a thermostat to control the fan operation, follow the thermostat manufacturer’s instructions.

Warning: Installation of accessories should only be undertaken by those with mechanical knowledge and are familiar with working on vehicles. Always use eye protection (goggles, safety glasses or shield). Park the vehicle in a well lit area, on level ground and apply the parking brake. Only work on a cold vehicle that has been sitting overnight, failure to do so will result in severe burns and injury. Before starting the vehicle, make sure no tools or any other items are left under hood that could interfere with or be drawn into moving parts of the engine. Failure to follow instructions can lead to severe damage and personal injury.