OPERATORS MANUAL

Demco BASEPLATE

Jeep Cherokee

Pin Height - 19” Pin Centers - 32-3/4”

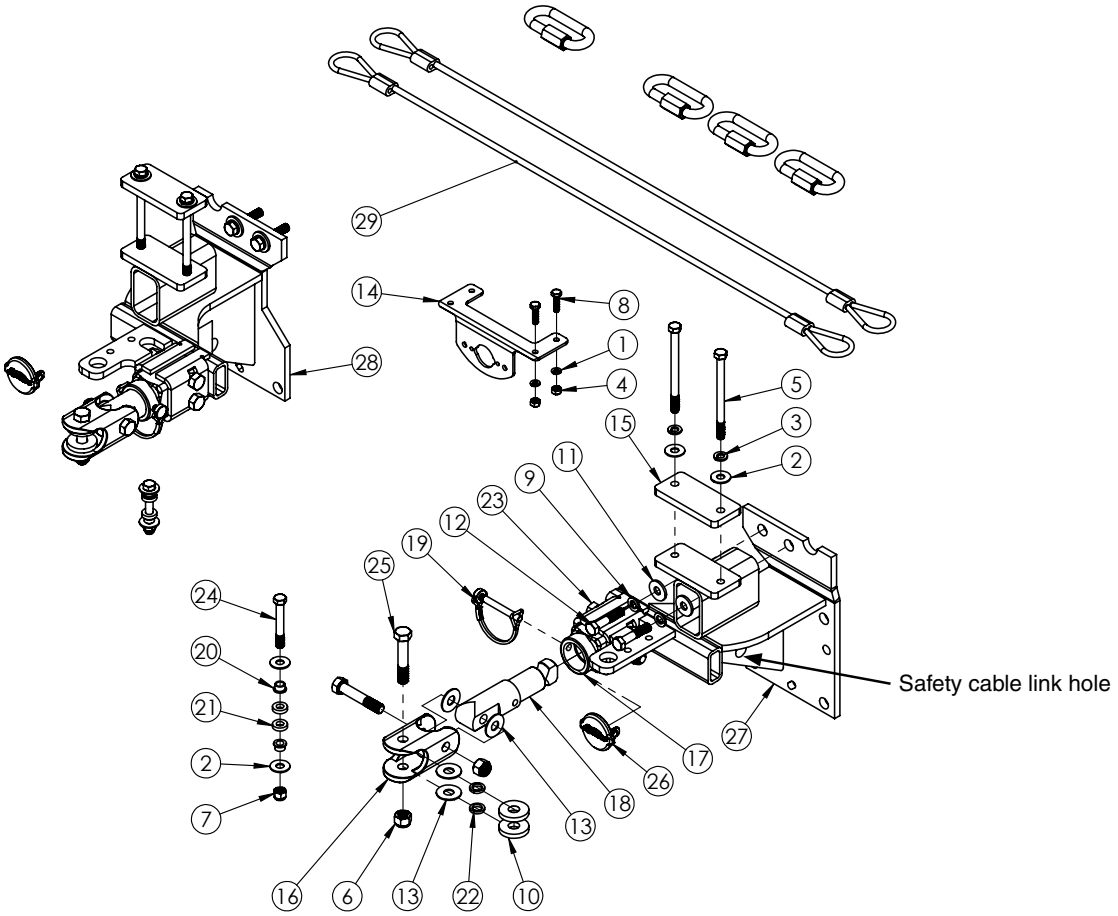

9519307 PARTS LIST

ITEM	PART #	QTY	DESCRIPTION
1	**00057**	2	WASHER, .25 SPRING LOCK
2	**00059**	8	WASHER, FLAT .375
3	**00060**	4	.375 LOCKWASHER
4	**00062**	2	NUT .25NC HEX
5	**00675**	4	BOLT .375NC X 5.00 GR5 HEX HD
6	**02178**	8	NUT, .50NC LOCK, NY. INSERT
7	**02592**	2	NUT, .375NC NYLON LOCK
8	**04055**	2	.25-20NC X 1 GD5 HEX
9	**07284**	4	WASHER, SPRING LOCK, 10MM
10	**07908-95**	4	HEAVY WASHER
11	**09229**	4	WASHER, FENDER, 10MM
12	**10746**	4	BOLT, 10MM-1.25 X 50MM-GR. 8.8
13	**13317**	8	CLEVIS SPACER WASHER
14	**13612-76**	1	PLUG MOUNT
15	**14802-76**	2	SUPPORT PLATE

Please order replacement parts by PART NO. and DESCRIPTION.

ITEM	PART #	QTY	DESCRIPTION
16	**15040-81**	2	END JOINT
17	**15041-76**	2	PULL BLOCK
18	**15042-95**	2	PULL STUD
19	**15291**	2	PN, 5/16” X 2.5 UL RND
20	**15338**	4	FLANGE BUSHING
21	**15339**	4	SPACER/WASHER NYLON
22	**15340**	4	SPACER/WASHER NYLON
23	**15350**	4	BOLT .50NC X 3.25 GR8 HEX
24	**15351**	2	BOLT .375 X 2.75 W/ 1.75 SHANK
25	**15352**	4	BOLT .50NC X 2.75 W/1.75 SHANK
26	**15675**	2	TABLESS BASEPLATE COVER
27	**15835-76**	1	PULL POD, DRIVER SIDE
28	**15836-76**	1	PULL POD, PASSENGER SIDE
29	**6155**	1	BASEPLATE SAFETY CABLE KIT
30	**14876**	4	AVEX RIVET (not shown)
31	**07490**	4	1/2" WASHER (not shown)
32	**12329**	1	LOCTITE (not shown)

Please order replacement parts by PART NO. and DESCRIPTION.

ASSEMBLY
OPERATION
REPLACEMENT PARTS

READ *complete manual CAREFULLY BEFORE attempting operation.*

Doing Our Best to Provide You the Best

WARNING: FAILURE TO FOLLOW THESE INSTRUCTIONS CAN RESULT IN LOSS OF TOWING VEHICLE CONTROL, SEPARATION OF THE TOW BAR FROM THE TOWING VEHICLE, SEPARATION OF THE TOWED VEHICLE FROM THE TOW BAR, CAUSING SEVERE PERSONAL INJURY, DEATH, OR PROPERTY DAMAGE.

⚠ CAUTION

Safety is of utmost importance at all times. There are several items that must be checked each time before using and while using a tow bar.
Before allowing anyone to hook up or operate a tow bar, be sure they have read and understand the proper operating procedure.

DO NOT use worn or damaged cables and/or pins.

Be sure the **SAFETY CABLES** are hooked, chassis to chassis, to both the towing and towed vehicles using the crisscross method.

Check clearance between vehicles in a turning situation.

Check base plate mounting bolts for tightness and frame for metal fatigue.

Do not load the towed vehicle with anything as you may exceed the towing capacity of the tow bar.

Keep fingers away from pivot points to prevent personal injury.

Be sure the steering components of the towed vehicle are properly aligned.

Demco baseplates are designed for use on factory vehicle suspension setups. Demco baseplates are not recommended for use on modified suspensions lowered or raised. Towing vehicle must be larger and at least 500 lbs. heavier than the towed vehicle and tow bar combined.

NOTE: This unit can be backed up in moderate increments. Any severe backwards cornering could result in damage to the Tow Bar and/or towed vehicle chassis.

For automatic transmissions: Consult your vehicle owners manual for towing suitability with the drive shaft connected. Otherwise, the towed vehicle will have to be equipped with a transmission pump or drive shaft disconnect.

Check to make sure that all lights are in proper working order.

The information on towability of vehicles is reprinted with permission of MotorHome© Magazine, and is believed to be reliable. However, **Demco does not** warrant the information to be correct. Always consult your towed vehicle owner's manual and follow towing instructions. Each year, **MotorHome© Magazine,** compiles a list of vehicles that can be towed four-down behind a motorhome with no modifications required.

⚠ **Caution: MotorHome© Magazine** left out any vehicles that have towing speed limits slower than 55 m.p.h., or distance limits of less than 200 miles. At a minimum, these vehicles require significant modification, such as the use of an aftermarket product, to make them towable. The availability of a **Demco Tow Bar Base Plate does not** imply that these vehicles can be modified or that there is an aftermarket product available. Refer to your vehicle owner's manual or consult your dealer to determine whether your vehicle can be modified to make it towable. Failure to observe this precaution could result in property damage or personal injury.

IMPORTANT INSTALLATION ITEMS

DEMCO products and accessories are intended to be installed by professional installers with experience, proper equipment and the ability to do modification work. Installers with these qualifications can be found in RV and Automotive Service Centers.

If the car to be towed has been in an accident, the chassis may be damaged in an area where the Base Plate attaches. It may no longer be suitable for towing. Extreme caution and careful examination are required in such a situation. It is also likely, even from a minor accident, that the hole alignment will be more difficult due to hole alignment problems.

Many DEMCO Base Plates are designed to use existing holes and hardware to mount the Base Plate to the towed vehicle. Even though the bolt is there, however, do not assume it is adequate for mounting the Base Plate. Manufacturers make many changes in hardware both within and between model years. Be sure the bolt is long enough to protrude past the nut a distance no less than 1/2 the diameter of the bolt, after the Base Plate is mounted. The threads should be in good condition. **We require that "LOCTITE® Blue" be used on all bolts.** If a new bolt is required, be sure it is SAE Grade 5 or Metric 8.8.

NOTE:

The dimensional variations between otherwise identical vehicles can be considerable. Some minor modifications may have to be made to ensure a proper fit.

BOLT TORQUE SPECIFICATIONS

STANDARD BOLTS:			METRIC BOLTS:		
Size	**Grade**	**Torque**	**Size**	**Grade**	**Torque**
5/16"	5	18 ft/lbs	8mm	8	23 ft/lbs
3/8"	5	30 ft/lbs	10mm	8	45 ft/lbs
7/16"	5	50 ft/lbs	12mm	8	78 ft/lbs
1/2"	5	75 ft/lbs	14mm	8	125 ft/lbs

INSTALLATION INSTRUCTIONS

1. Open hood and remove twelve plastic push fasteners from top filler panel.

2. Remove three screws from each side just inside of facia.

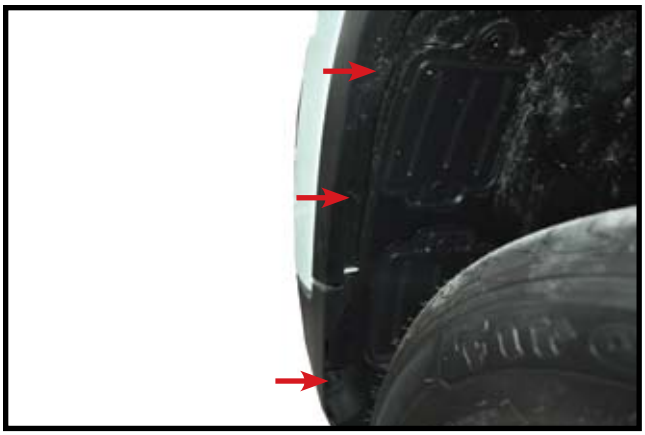

3. Remove three screws from the front of each wheel well.Release plastic clips that hold fender flares to facia.

4. Drill out two aluminum rivets from front of each tire on the bottom of facia using 3/16" drill bit.

5. Remove nine bolts from skid panel and remove panel.

6. On each side remove one screw that attached the facia to the fender. Pull out and forward to remove facia. Unplug any wire connections that need to be unhooked to remove facia.

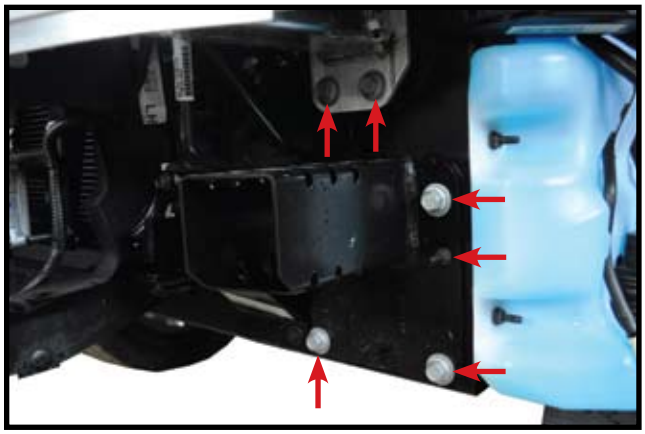

7. Remove three bolts and one nut from lower facia support. Remove the bottom two bolts from the bumper they will not be reused. Repeat on other side.

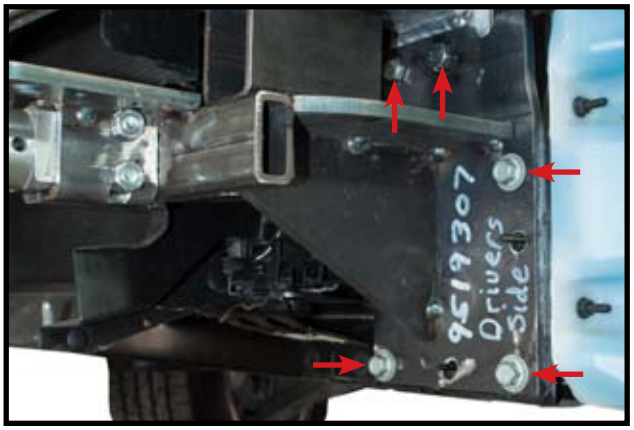

8. Reinstall the three bolts that were used on the lower facia support. Install 10mm bolt, 10mm fender washer, and 10mm lock washer in lower bumper holes. Leave bolts loose for now. Repeat on other side. **NOTE:** Use blue thread lock on all bolts.

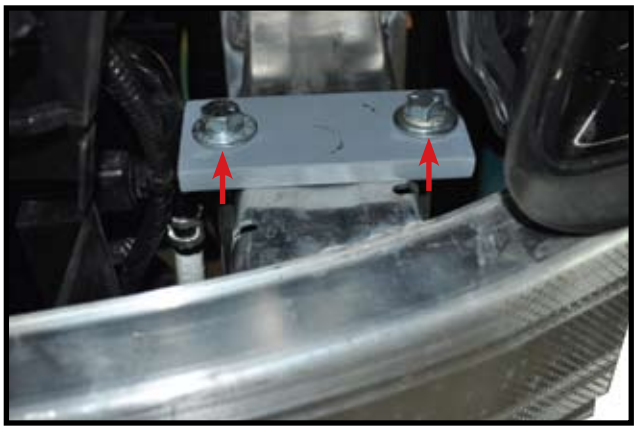

9. Place top support plate on each side of bumper and using 3/8" x 5" bolts, lock washers, and flat washers. Tighten the support brace till baseplate is pulled tight to bottom of bumper. **NOTE:** Use blue thread lock on all bolts.

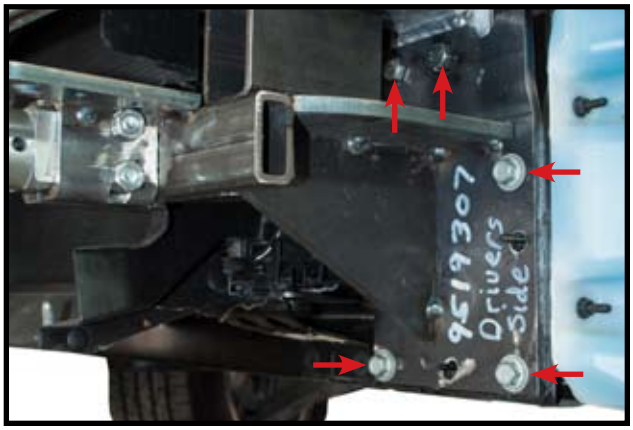

10. Tighten all bolts according to chart on front page in this order - bottom three, then lower bumper bolts, and then top support brace bolts.

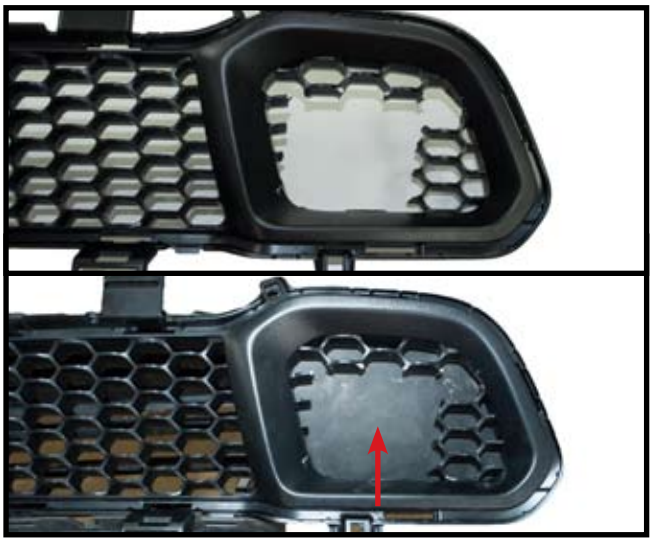

11. Trim lower grill as shown in picture. Trim as needed. **NOTE:** If equipped with active shutter system, trim solid plastic out behind grill webbing. Grill was taken out for clarity.

12. Replace facia and factory hardware in reverse order. Plug mount (item #12) may be installed if desired in convenience holes on either chain anchor or as desired. **NOTE:** Excess material may be trimmed from bracket.

INSTRUCTIONS FOR TOWED VEHICLE BASEPLATE SAFETY CABLES & PARTS BREAKDOWN

Example #1

Wrap the safety cable around the baseplate crossmember and attach with one quick-link. Attach the other end of the safety cable to the vehicles frame rail or crossmember of the vehicles frame using another quicklink. **See illustration below. NOTE:** when routing cable, make sure cable does not touch or rub against wires, brake hoses, brake lines or axle shafts. Do this on each side of the baseplate.

Baseplate pictured is for illustration only and is not your specific baseplate.

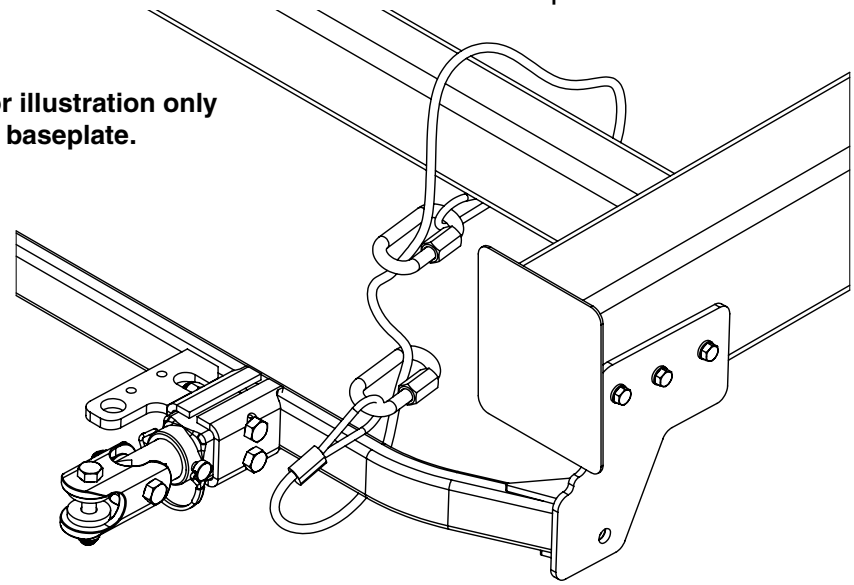

Example #2

Some baseplate models have a hole to mount the quicklink and cable. Example: some baseplates may not have a crossmember from one side to the other, thus you have a quicklink mounting hole. **See illustration below:** this shows the use of just one quick-link. Other installs may require 2 quicklinks depending on baseplate model. **NOTE:** when routing cable, make sure cable does not touch or rub against wires, brake hoses, brake lines or axle shafts. Do this on each side of the baseplate.

Baseplate pictured is for illustration only and is not your specific baseplate.

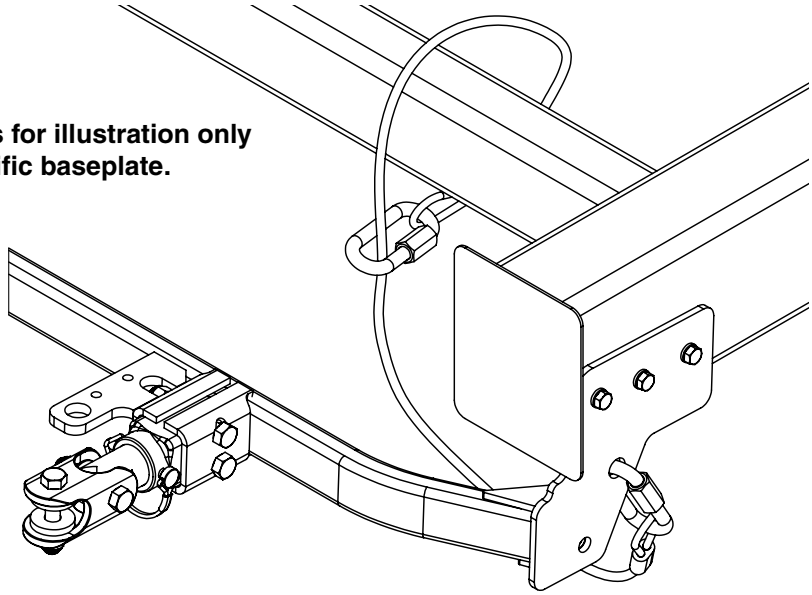

REF. NO.	PART NO.	QTY.	DESCRIPTION
-	6155	-	**Safety Cable Kit**
1.	-	2	36” Nylon coated safety cables rated @ 14,000 lbs. per pair
2.	-	4	1/2” Quicklinks rated @ 10,000 lbs. each

Installation to Tow Bar

Demco Commander Tow Bar

Hardware Used: two 3/8” bolts, four 3/8” steel washers, four 3/8” poly washers, four 3/8” poly bushing and two 3/8” lock nuts.

1. Remove existing clevis from end of tow bar shaft.
2. Install poly bushing from inside clevis using a pliers to squeeze bushing into hole. You can use a rag or cardboard between pliers to protect bushing and clevis from damage. If bushing is hard to start in hole, hole may be cleaned out with 1/2” drill bit.
3. The 3/8” poly washers go in between the tow bar shaft and poly bushings.
4. The 3/8” steel washers go on the outside of clevis fastened by the 3/8” bolt and nut.
5. Tighten nut snug so you can still rotate clevis on tow bar shaft.

Demco Excalibar II Tow Bar

Hardware Used: two 1/2” bolts, four 1/2” narrow rim poly washers and two 1/2” lock nuts

1. Remove existing clevis from end of tow bar shaft.
2. Install the 1/2” narrow rim poly washers between the tow bar shaft and clevis.
3. Tighten nut snug so you can still rotate clevis on tow bar shaft.

Demco Dominator Tow Bar

Hardware Used: two 1/2” bolts, four 1/2” wide rim poly washers and two 1/2” lock nuts

1. Remove existing clevis from end of tow bar shaft.
2. Install the 1/2” wide rim poly washers between the tow bar shaft and clevis.
3. Tighten nut snug so you can still rotate clevis on tow bar shaft.

Demco Excalibar or Aluminator Tow Bar

Hardware Used: two 1/2” bolts and two 1/2” lock nuts

1. Remove existing clevis from end of tow bar shaft.
2. Install tow bar shaft into clevis.
3. Tighten nut snug so you can still rotate clevis on tow bar shaft.

Roadmaster Tow Bars

Hardware Used: two 1/2” bolts and two 1/2” lock nuts or two 1/2” bolts, four 1/2” - 1/4” thick washers and four 1/2” wide rim poly washers and two 1/2” lock nuts

1. Remove existing clevis from end of tow bar shaft.
2. If you tow bar came with a black bushing or red ends, install end into clevis and fasten using the provided 1/2” bolts and tighten nut snug so you can still rotate clevis on tow bar shaft.
3. If you have a Sterling towbar without the black bushing, install clevis using the 1/4” thick washers and 1/2” wide rim poly washers as shown in bottom picture.

Hooking Up Tow Bar to Baseplate

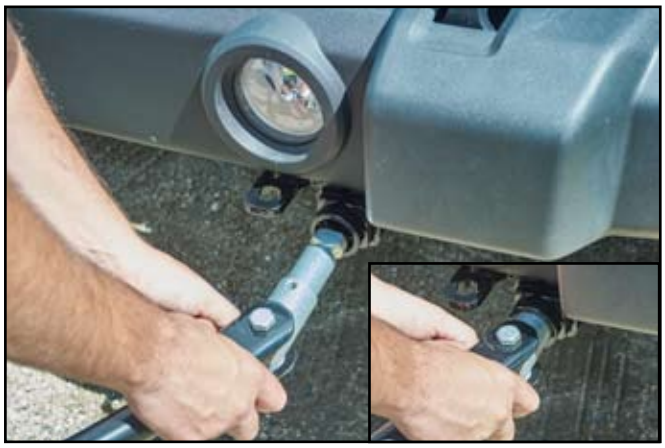

1. Insert pull tab into baseplate pull socket with the flat spot and locking hole facing up. Push pull tab into socket until it stops.

2. Rotate assembly 90° until lock pin holes line up. (Tab to clevis bolt will be horizontal while tow bar to clevis bolt will be vertical).

3. Insert locking pin into cross hole. If pin does not install, pull tab may not be installed correctly or try rotating tab 180° and try again. Hook up safety cables and other equipment required for towing your vehicle

Unhooking Tow Bar from Baseplate

1. Release the pressure from tow bar as stated in your tow bar manual.

2. Reverse the hooking up process.

Plug Cover Instructions

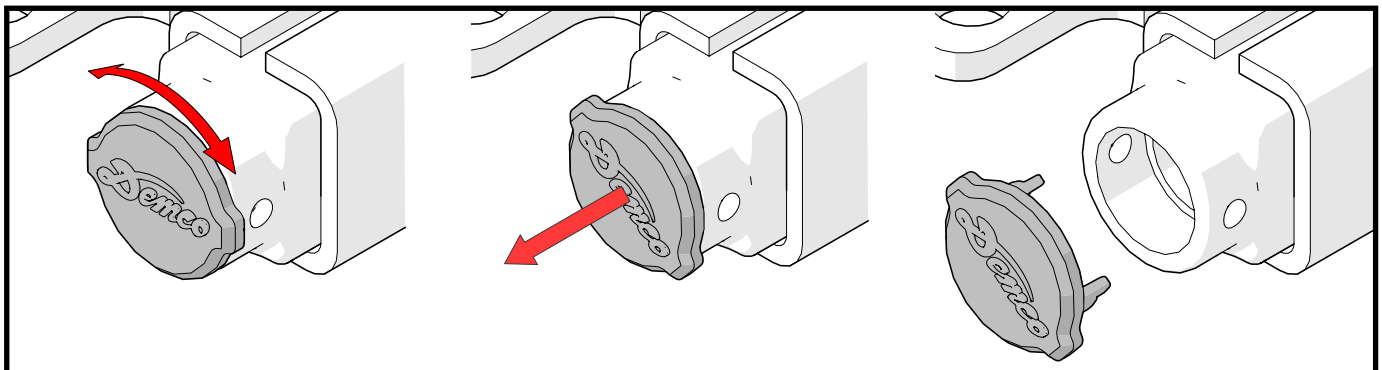

1. To remove cover, rotate cover by the tabs about 1/8 of a turn.

2. Pull cover and the cover will pull off.

3. To install cover, push cover into socket and rotate until it snaps into place