14055 FORD ECONOLINE VAN (E-150, E-250, E-350)

GROSS LOAD CAPACITY WHEN USED AS A WEIGHT CARRYING HITCH: 10,000 LBS. TRAILER WEIGHT & 1,000 LBS. TONGUE WEIGHT.
GROSS LOAD CAPACITY WHEN USED AS A WEIGHT DISTRIBUTION HITCH: 12,000 LBS. TRAILER WEIGHT & 1,200 LBS. TONGUE WEIGHT

*****DO NOT EXCEED VEHICLE MANUFACTURER'S RECOMMENDED TOWING CAPACITY.*****

Parts List			
ITEM	QTY	PART NUMBER	DESCRIPTION
1	2	FW12	FW, 12, ZP
2	6	1/2 - 13 x 2"	CARRIAGE BOLT
3	6	CM-SP1	.250 x 1.50 x 2.00" SQUARE HOLE SPACER
4	6	HFN 1213	HEX FLANGE NUT

TOOLS REQUIRED
RATCHET
3/4" SOCKET
7/8" SOCKET
TORQUE WRENCH
DRILL
17/32" DRILL BIT

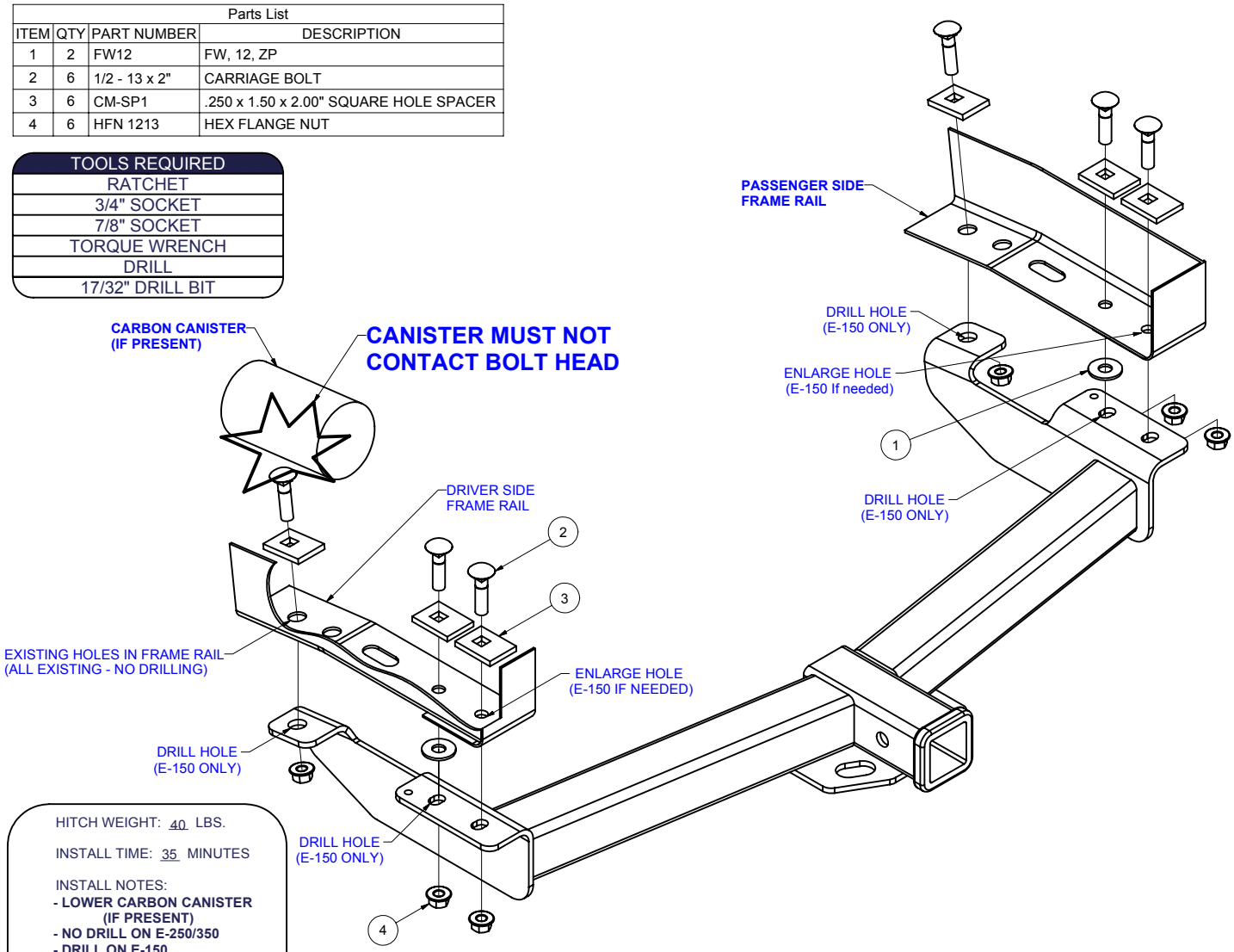

HITCH WEIGHT: 40 LBS.

INSTALL TIME: 35 MINUTES

INSTALL NOTES:
- **LOWER CARBON CANISTER (IF PRESENT)**
- **NO DRILL ON E-250/350**
- **DRILL ON E-150**

INSTALLATION STEPS

1) If present, lower carbon canister from driver side frame rail.

2) Install forward and rearward carriage bolts and spacer in frame rails as shown.
(NOTE: On E-150 models using the hitch as a template drill holes as shown above and enlarge holes as needed.)

3) Raise hitch into position and hand tighten forward and rearward fasteners to both rails as shown.

4) Install center carriage bolt and spacer in frame placing flat washers between rails and hitch as shown. (Do not overlap spacers)

5) Torque all 1/2" fasteners to 75 lb-ft.

6) Reattach carbon canister if present - carbon canister must not contact bolt head, if it does, loosen canister fasteners and reposition to ensure clearance with bolt heads.

PERIODICALLY CHECK THIS RECEIVER HITCH TO ENSURE THAT ALL FASTENERS ARE TIGHT AND THAT ALL STRUCTURAL COMPONENTS ARE SOUND.

Curt Manufacturing Inc., warrants this product to be free of defects in material and/or workmanship at the time of retail purchase by the original purchaser. If the product is found to be defective, Curt Manufacturing Inc., may repair or replace the product, at their option, when the product is returned, prepaid, with proof of purchase. Alteration to, misuse of, or improper installation of this product voids the warranty. Curt Manufacturing Inc.'s liability is limited to repair or replacement of products found to be defective, and specifically excludes liability for incidental or consequential loss or damage.

Looking for dependable trailer hitches and towing? Rely on CURT for quality and long-lasting products.