CORSA®
PERFORMANCE EXHAUSTS

INSTALLATION INSTRUCTIONS

Please Forward All Attached Information to Consumer
Warranty Not Valid Unless Returned to CORSA Exhaust

Exhaust System Installation
Axle Back Exhaust System
2014-Current C7 Z06 Corvette
PN's 14766, 14767, 14768, 14769
Polished & Black Quad 4.5" Pro or Poly Tips

Please take time to read and understand these installation instructions.

CORSA recommends that the installation of this system be performed by a qualified service center or professional muffler installer who has the necessary equipment, tools and experienced personnel. However, if you decide to perform this install, the use of a hoist and an additional person will be required.

NOTE for Base C7 (Not Z06): Installation of this system requires a tune to deactivate AFM (4 cylinder mode) and to eliminate the resulting check engine lights that occur when the factory exhaust valves are removed and the wiring is disconnected. The AFM (without the valves) creates a low frequency sound that is loud, choppy, and undesirable.

CAUTION: Never work on a hot exhaust system. Allow time for the vehicle to cool. Always wear eye protection when working under a vehicle.

Recommended Tools:

- 3/8" drive ratchet
- 3/8" drive 10mm deep socket
- 3/8" drive 15mm deep socket
- 3/8" drive 13mm deep socket
- 8mm wrench
- 13mm wrench
- Long extension (10")
- 1/4" drive ratchet
- 1/4" drive 7mm shallow socket
- Grommet pullers
- Soap and water solution
- Torque Wrench
- Screwdriver for License Plate Screws
- Safety glasses

Please confirm that all parts are present before beginning the factory exhaust system removal and CORSA exhaust system installation.

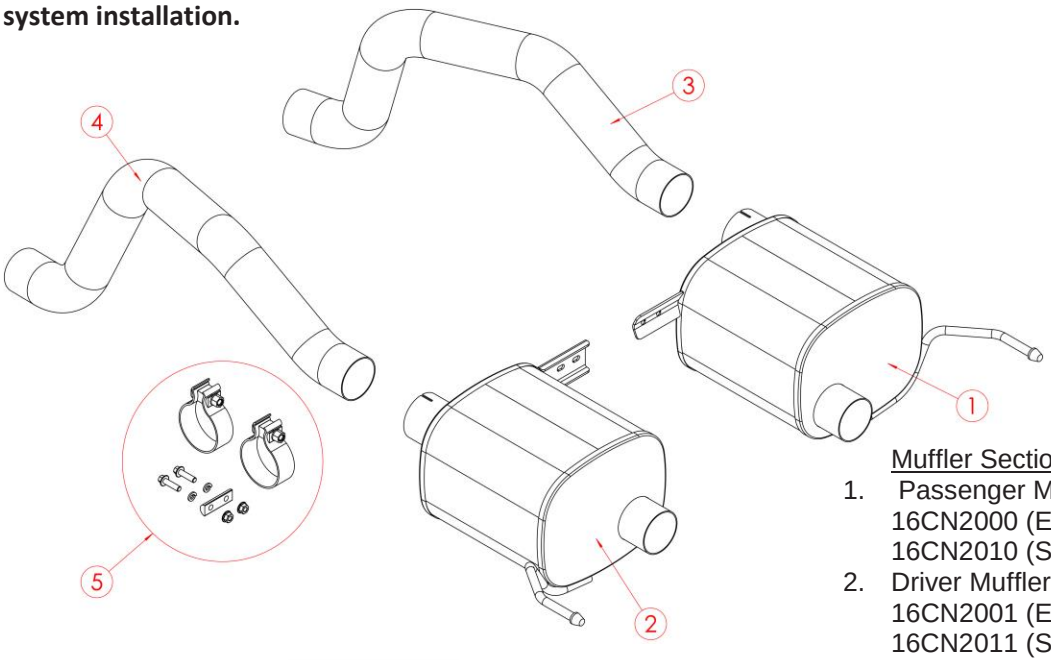

Anti Seize Lubricant

Muffler Section Bill of Materials

1. Passenger Muffler Assembly:
   16CN2000 (Extreme – Used on 14766/14767)
   16CN2010 (Sport – Used on 14768/14769)
2. Driver Muffler Assembly:
   16CN2001 (Extreme – Used on 14766/14767)
   16CN2011 (Sport – Used on 14768/14769)
3. 16CN4010 – Pass. Valve Delete Axle Pipe
4. 16CN4011 – Driver Valve Delete Axle Pipe
5. 16CN7019 – Hardware Kit

Exhaust System Installation
Axle Back Exhaust System
2014-Current C7 Z06 Corvette
PN's 14766, 14767, 14768, 14769
Polished & Black Quad 4.5" Pro or Poly Tips

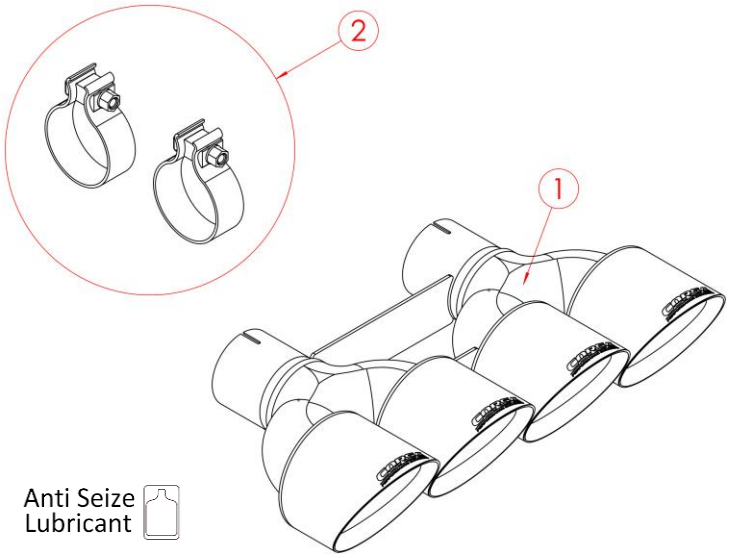

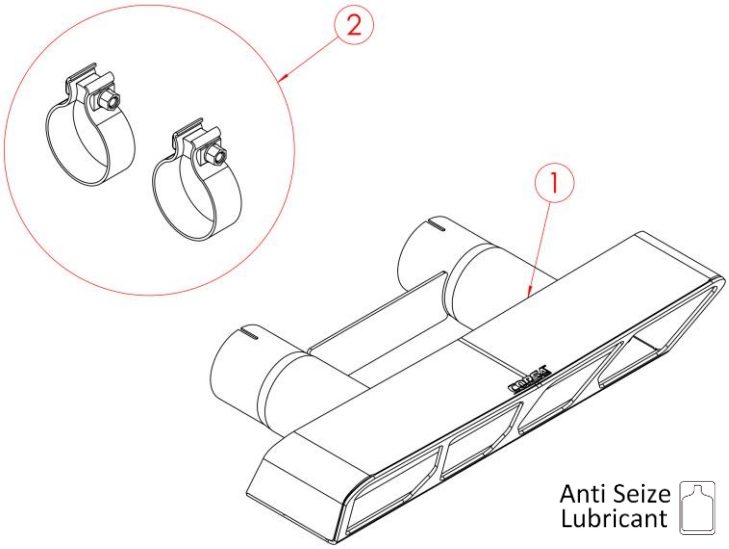

Tip Section Bill of Materials

1. Tip Assembly:
   14062/14062BLK (Quad 4.5" Pro Series Tip Asm. – Used on 14766/14768)
   14063/14063BLK (Polygon Tip Asm. Used on 14767/14769)
2. 16CN7017 – Tip Hardware Kit

Factory Exhaust System Removal:

NOTE: This process involves the removal of the lower rear fascia, followed by the removal of the stock axle back components.

1. Remove the two bolts above the tip location using a 10mm socket and 3/8" ratchet. **(Fig. A)**

2. Remove the ten bolts that secure the bottom corners of the lower fascia (5 per side) using a 7mm socket and 1/4" ratchet. **(Fig. B & C)**

3. Remove the two lower mesh inserts on each side of the lower fascia. Each one is snapped in place using six tabs, which can be pushed out from the inside of the fascia. **(Fig. D & E)**

4. Unsnap each lower rear corner of the rear fascia by pushing the end of the tab inwards while pushing the rear fascia up and then backwards. **(Fig. F & G)**

5. Unscrew and remove the license plate to enable access to the two upper center mounting bolts for the rear fascia. **(Fig. H)**

REMOVAL CONTINUES ON NEXT PAGE; REMOVAL PICTURES ON PAGES 5-6

6. CAREFULLY Remove the two reflectors on each side to enable access to the four outer mounting bolts for the rear fascia. Each reflector is snapped in place using three tabs, which can be pushed out from inside the fascia. **(Fig I)**

7. Remove the six bolts that secure the top of the lower fascia (2 on each side and 2 in the center) using a 10mm socket and 3/8" ratchet. **(Fig. J & K)**

8. CAREFULLY unsnap each tab securing the top corner of the rear fascia to remove it from the vehicle. Set the rear fascia aside in a safe location. **(Fig. L, M, & N)**

9. Remove the two bolts holding the stock mufflers together using a 10mm socket and 3/8" ratchet. **(Fig. O)**

10. Beginning on the passenger side, remove the two bolts securing the rear muffler grommet with a 13mm socket and 3/8" ratchet. Set aside these bolts to be reused during the installation process. **(Fig. P)**

    When connecting to a factory NPP exhaust; continue to step 11. If you're connecting to the factory base exhaust, skip to step 12.

11. Disconnect the rear (non-AFM) valve wire. **(Fig. Q)**

12. Loosen the clamp bolt at the axle pipe inlet using a 15mm socket and a 3/8" ratchet. This will allow the factory exhaust section to droop. **(Fig. R)**

13. **For Base C7 (Non Z06 Only):** Disconnect the AFM valve wire (front valve on NPP cars), then carefully pivot the stock exhaust section down and rearwards to free it from the vehicle. **(Fig. S & T)**

    NOTE FOR AUTOMATIC CARS ONLY: The shift linkage on the driver side has to be moved to create enough clearance to remove the stock exhaust. This can be done by putting the car in neutral while the driver side is being removed. (Fig. U)

14. Repeat steps 10-13 for the driver side stock exhaust section.

15. Remove the hanger grommet from each rear muffler using grommet pullers or similar device. Set aside both grommets to be reused during the installation process. **(Fig. V)** This concludes the removal process.

    Note: The use of a soap and water solution may make working with rubber grommets easier.

REMOVAL PICTURES ON PAGES 5-6

Exhaust System Installation
Axle Back Exhaust System
2014-Current C7 Z06 Corvette
PN's 14766, 14767, 14768, 14769
Polished & Black Quad 4.5" Pro or Poly Tips

Factory Exhaust Removal Pictures

Fig. A

Fig. B

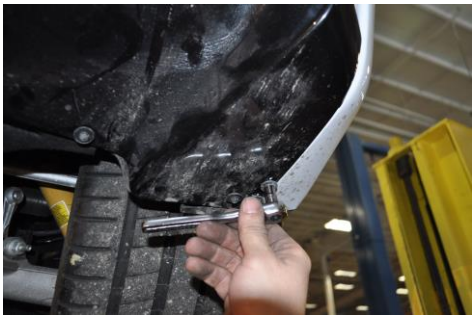
Fig. C

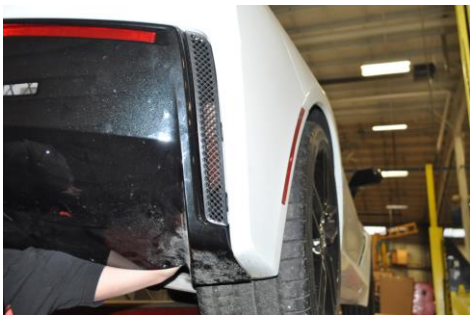
Fig. D

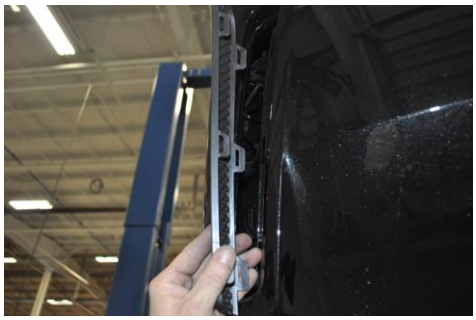
Fig. E

Fig. F

Fig. G

Fig. H

Fig. I

Fig. J

Fig. K

Fig. L

REMOVAL PICTURES CONTINUED ON NEXT PAGE

Factory Exhaust Removal Pictures

Fig. M

Fig. N

Fig. O

Fig. P

Fig. Q

Fig. R

Fig. S

Fig. T

Fig. U

Fig. V

Installation of CORSA Exhaust System:

NOTE: Apply the anti-seize lubricant (supplied) to the threads ONLY of all the clamps. Failure to follow this procedure can cause nuts to seize on clamps and potentially destroy threads. After applying anti-seize lubricant, be sure to thoroughly clean your hands, as lubricant will tarnish stainless steel. All clamps should be tightened using a properly calibrated Torque Wrench. Using an air impact gun will damage the clamp and reduce its ability to effectively seal the joint. It may also cause the joint to separate, thereby causing damage to your exhaust system and to your vehicle.

NOTE: Align all clamps so that the center of the clamp bolt is 90 degrees from the notch in the pipe. (See Fig. CLAMP)

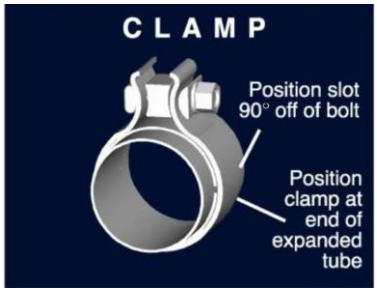

1. **For Base C7 (Non-Z06):** Tuck each of the AFM valve wires (front valve on NPP cars) up into the chassis near the back of the transmission. They will no longer be needed. Secure with a zip tie or equivalent. **(Fig. A)**

2. Locate the driver and passenger valve delete axle pipes. Install each axle pipe into the chassis as shown. Slide the axle pipe inlets into the x-pipe section. Rotate the axle pipes until they are centered between the chassis and the transmission components, then snug the clamps at the x-pipe outlet using a 15mm socket and a 3/8" ratchet, leaving them loose enough for further adjustment. **(Fig. B & C)**

3. Reinstall each of the rear muffler hanger grommets as shown using a 13mm socket and a 3/8" ratchet. **(Fig. D)**

   When connecting to a factory NPP exhaust; continue to step 4. If you're connecting to the factory base exhaust, skip to step 5.

4. Tuck each of the rear (non-AFM) valve wires into the chassis. They will no longer be needed. Secure with a zip tie or equivalent. **(Fig. E)**

   NOTE: The driver side muffler needs to be installed first, as the driver side tie bracket sits further forward in the vehicle. The passenger side tie bracket will nest inside of the driver side bracket.

5. Locate the driver side rear muffler assembly, and one of the 2.75" clamps. While holding the assembly with the muffler case seam pointed up as shown, position one of the 2.75" clamps such that the clamp bolt is to the bracket side (inside of muffler) and the nut is towards the ground. **(Fig. F)**

INSTALL CONTINUES ON NEXT PAGE; INSTALL PICTURES ON PAGES 10-12

6. Insert the driver's side hanger into the rubber grommet as shown, then slide the expansion on the muffler inlet over the outlet of the clamp on elbow. Secure the clamp with the 15mm socket and 3/8" ratchet, and a long extension, leaving it loose enough for further adjustment. **(Fig. G, H & I)**

   Note: The use of a soap and water solution may make working with rubber grommets easier.

7. Repeat Steps 9 & 10 on the passenger's side of the vehicle. Both of the mufflers will still be free to rotate and move at this point, as the muffler tie brackets are not yet connected. **(Fig. J, K, & L)**

8. Locate the tie bracket hardware: 2 M8 flange bolts, 2 lock washers, the half round spacer, and the 2 M8 serrated flange nuts. Pre assemble the lock washers onto the M8 flange bolts as shown. **(Fig. M)**

   NOTE: The lock washer must go on the flange bolt side to function properly. The serrations on the flange nut will provide the locking feature on the opposite side.

9. Rotate the rear mufflers upwards until the hole sets align in the muffler tie brackets. Load the two M8 flange bolts and lock washers in from the front. Place the half round spacer onto the bolts from the backside, so it sits inside the "V" shape of the passenger side tie bracket. Hand tighten the M8 flange nuts onto the half round spacer as shown to finish the connection. **(Fig. N & O)**

   NOTE: Make sure the lower step on the passenger side tie bracket is fully inside of the channel made by the driver side bracket. (Reference the Arrows in Fig. O)

10. Reinstall the rear fascia onto the vehicle. CAREFULLY align each of the locating tabs along the top edge of the rear fascia. Snap the two corner tabs into place. **(Fig. P, Q, & R)**

11. Reinstall the six bolts that secure the top of the lower fascia (2 on each side & 2 in the center) using a 10mm socket and 3/8" ratchet. **(Fig. S & T)**

12. Reinstall the two bolts above the tip location using a 10mm socket and 3/8" ratchet. **(Fig. U)**

13. Reinstall the ten bolts that secure the bottom corners of the lower fascia (5 per side) using a 7mm socket and 1/4" ratchet. **(Fig. V & W)**

14. Locate the Corsa tip assembly, along with the two 2.75" clamps (packaged inside tip box). Align both clamps on the tip inlet as shown, with the clamp bolts to the inside and the clamp nuts facing downwards. **(Fig. X (Quad Pro Tips) or Fig. Y (Poly Tip))**

INSTALL CONTINUES ON NEXT PAGE; INSTALL PICTURES ON PAGES 10-12

15. CAREFULLY insert the tip assembly into the cutout in the rear valence. Align the tip assembly inlet with both muffler outlets before sliding it into place as shown. **(Fig. Z & AA (Quad Pro Tips) or Fig. BB & CC (Poly Tip))**

16. Adjust the position and depth of the tip assembly until it is centered in the cutout, and has an equal amount of reveal on each side, then snug the clamps using a 15mm socket and 3/8" ratchet, leaving them loose enough for further adjustment. **(Fig. DD)**

17. Reinstall the license plate. **(Fig. EE)**

18. Reinstall the two reflectors on each side by snapping them back in place. **(Fig. FF)**

19. Reinstall the two lower mesh inserts on each side by snapping them back in place. It is easier to snap the inner tabs in place before the outer tabs. **(Fig. GG)**

20. Adjust the system accordingly to maximize chassis clearance while positioning the tip assembly within the bumper valence. Verify that the valved axle pipe assemblies are not contacting anything within the chassis. Starting at the front and working backwards, tighten the clamps to 45ft-lb using the torque wrench and 15mm socket, ensuring that the tips are still in the desired position.

    IMPORTANT NOTE **DO NOT over-tighten the clamps on the tip assembly, as this will make future removal of the tip assembly much more difficult. The C7 CORSA tip assemblies are designed to be interchangeable, between the different tip designs and finishes.**

21. Tighten the muffler tie bracket hardware at this time using a 13mm wrench, along with a 13mm socket and 3/8" ratchet. Torque to 15 Ft-Lbs. **(Fig. HH)** Installation complete.

NOTE: During cold weather start-ups, you may experience an exhaust sound that is deeper and louder in tone than usual. This is temporary and will diminish to normal levels once your engine has reached its normal operating temperature.
NOTE: Immediately following the installation of your exhaust system, you may experience a trace of smoke after initial start-up. DO NOT be alarmed. The smoke is caused by the burning of a small amount of forming oil residue used in the manufacturing process.

INSTALL PICTURES ON PAGES 10-12

Exhaust System Installation
Axle Back Exhaust System
2014-Current C7 Z06 Corvette
PN's 14766, 14767, 14768, 14769
Polished & Black Quad 4.5" Pro or Poly Tips

CORSA Exhaust Installation Pictures:

Fig. A

Fig. B

Fig. C

Fig. D

Fig. E

Fig. F

Fig. G

Fig. H

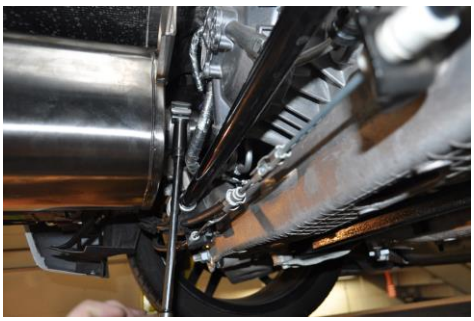

Fig. I

Fig. J

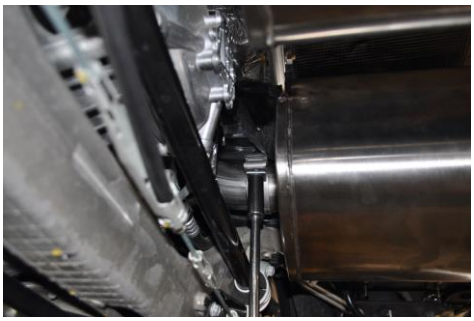

Fig. K

Fig. L

INSTALL PICTURES CONTINUED ON NEXT PAGE

CORSA Exhaust Installation Pictures:

Fig. M

Fig. N

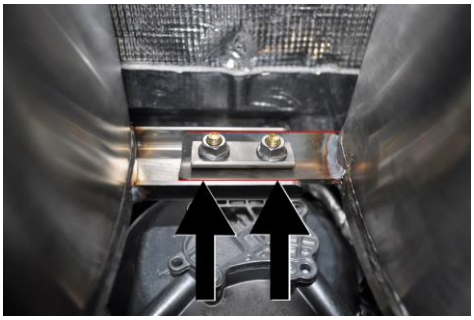

Fig. O

Fig. P

Fig. Q

Fig. R

Fig. S

Fig. T

Fig. U

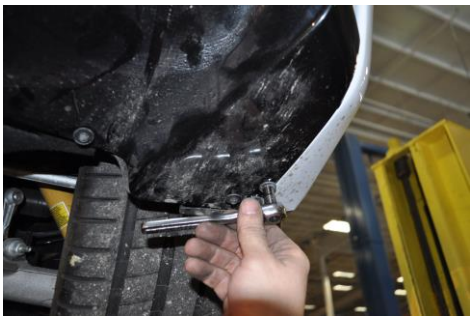

Fig. V

Fig. W

Fig. X

INSTALL PICTURES CONTINUED ON NEXT PAGE

CORSA Exhaust Installation Pictures:

Fig. Y

Fig. Z

Fig. AA

Fig. BB

Fig. CC

Fig. DD

Fig. EE

Fig. FF

Fig. GG

Fig. HH