Chicago Pneumatic

CP81300

Bottle Jack 30T

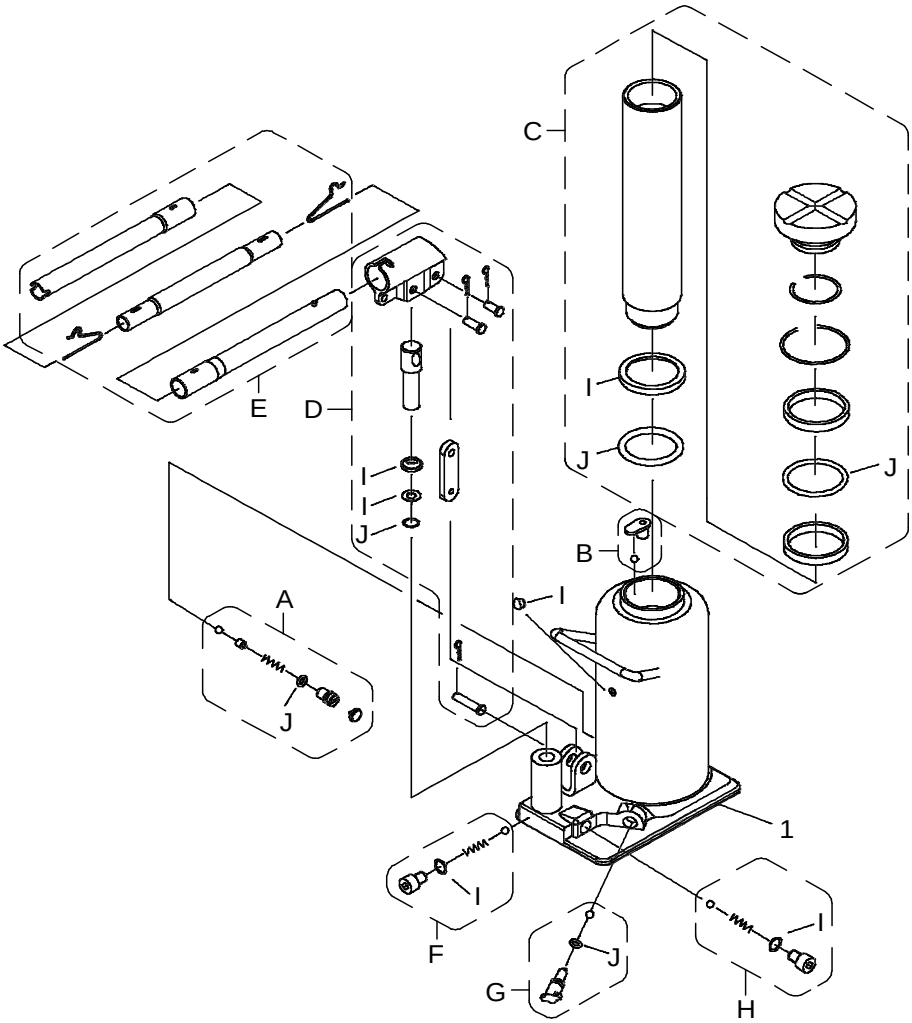


| Index No. | Part No. | Description | Qty. | Index No. | Part No. | Description | Qty. |
|---|---|---|---|---|---|---|---|
| 1 | 8950300368 | BODY | 1 | | | | |
| A | 8950321460 | SAFETY VALVE KIT | 1 | | | | |
| B | 8950321461 | VALVE KIT | 1 | | | | |
| C | 8950321473 | RAM KIT | 1 | | | | |
| D | 8950321497 | PUMP KIT | 1 | | | | |
| E | 8950311654 | HANDLE KIT | 1 | | | | |
| F | 8950321440 | VALVE KIT | 1 | | | | |
| G | 8950321464 | RELEASE VALVE KIT | 1 | | | | |
| H | 8950321470 | VALVE KIT | 1 | | | | |
| I | 8950321474 | GASKET KIT | 1 | | | | |
| J | 8950321475 | O-RING KIT | 1 | | | | |

| | | |
|---|---|---|
| 8940170883 | Safety instructions | 1 |
| 8940170384 | Operator's manual | 1 |
| 8950900082 | Warning Label | 1 |

Learn more about car jacks we have.