Chicago Pneumatic

CP81030

Bottle Jack 3T

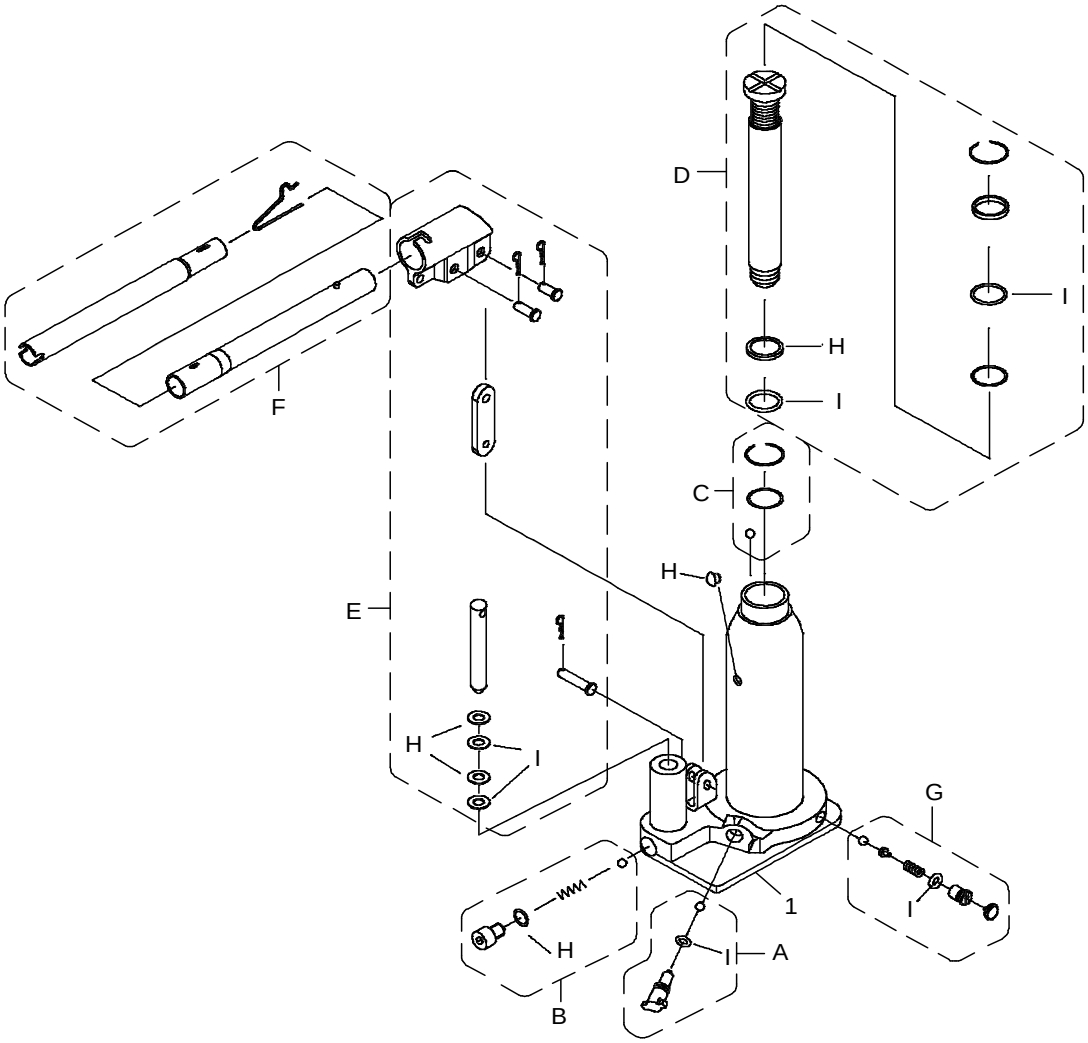


| Index No. | Part No. | Description | Qty. |
|---|---|---|---|
| 1 | 8950300363 | BODY | 1 |
| A | 8950321439 | RELEASE VALVE KIT | 1 |
| B | 8950321440 | VALVE KIT | 1 |
| C | 8950321447 | VALVE KIT | 1 |
| D | 8950321448 | RAM KIT | 1 |
| E | 8950321494 | PUMP KIT | 1 |
| F | 8950311651 | HANDLE KIT | 1 |
| G | 8950321444 | SAFETY VALVE KIT | 1 |
| H | 8950321449 | GASKET KIT | 1 |
| I | 8950321450 | O-RING KIT | 1 |

| Index No. | Part No. | Description | Qty. |
|---|---|---|---|
| | | | |

| | | |
|---|---|---|
| 8940170883 | Safety instructions | 1 |
| 8940170384 | Operator's manual | 1 |
| 8950900082 | Warning Label | 1 |

Spare parts without part number are not sold separately - High wear parts underlined

Learn more about car jacks we have.