Chicago Pneumatic

CP88232

Balloon Jack

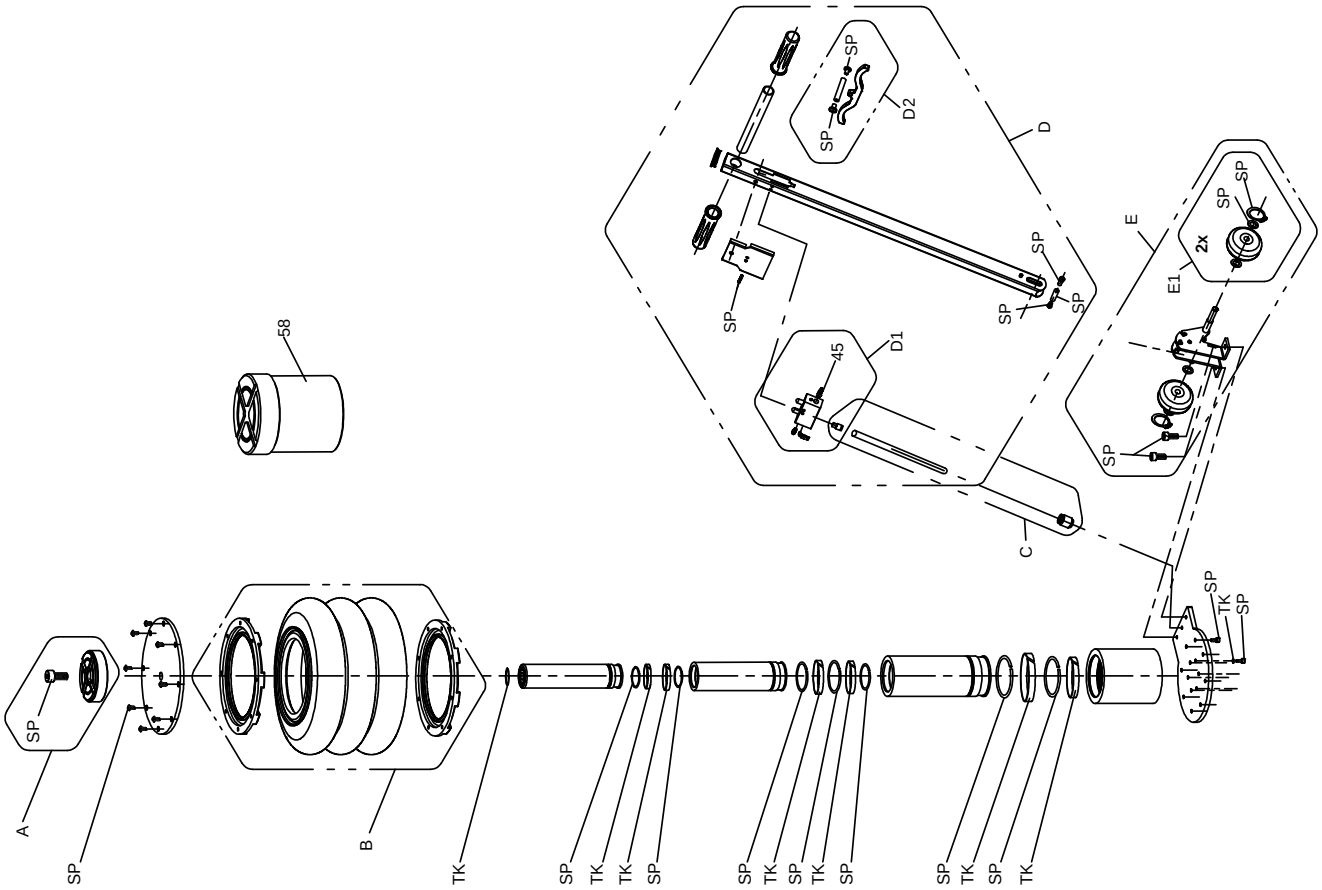

Index No.	Part No.	Description	Qty.	Index No.	Part No.	Description	Qty.
45	8951011809	PLUG	1				
58	8950312081	EXTENSION 60MM	1				
A	8950312039	SADDLE KIT	1				
B	8950340323	BALLOON KIT	1				
C	8950340320	HOSE KIT	1				
D	8950312060	HANDLE KIT	1				
D1	8950340309	VALVE KIT	1				
D2	8950312061	LEVER KIT	1				
E	8950312062	HANDLE STAND KIT	1				
E1	8950312063	WHEEL KIT (2)	1				
SP	8950380035	SMALL PARTS KIT	1				
TK	8950380036	TUNE UP KIT	1				

8940170883	Safety instructions	1
8940172710	Operator's manual	1

Learn more about car jacks we have.