BLACK+
DECKER™

STEAM MOP

INSTRUCTION MANUAL

CATALOG NUMBER
BDH1725SM

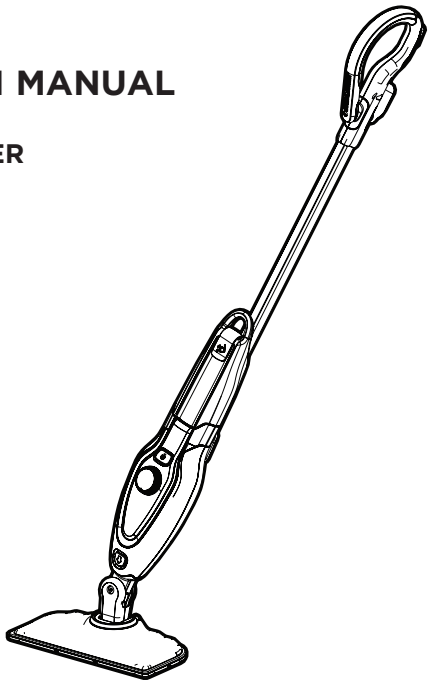

Thank you for choosing BLACK+DECKER!

PLEASE READ BEFORE RETURNING THIS PRODUCT FOR ANY REASON.

SAVE THIS MANUAL FOR FUTURE REFERENCE.

SAFETY GUIDELINES - DEFINITIONS

It is important for you to read and understand this manual. The information it contains relates to protecting **YOUR SAFETY and PREVENTING PROBLEMS.** The symbols below are used to help you recognize this information.

⚠ **DANGER:** Indicates an imminently hazardous situation which, if not avoided, will result in death or serious injury.

⚠ **WARNING:** Indicates a potentially hazardous situation which, if not avoided, could result in death or serious injury.

⚠ **CAUTION:** Indicates a potentially hazardous situation which, if not avoided, may result in minor or moderate injury.

NOTICE: Used without the safety alert symbol indicates potentially hazardous situation which, if not avoided, may result in property damage.

INTENDED USE

Your new steam mop has been designed for sanitizing and cleaning the following SEALED floors: hardwood, laminate, linoleum, vinyl, ceramic tile, stone, and marble. For floor use only; do not use the unit upside down. This appliance is intended for indoor household use only.

SAFETY INSTRUCTIONS

⚠ **WARNING:** Read all safety warnings and all instructions. Failure to follow the warnings and instructions listed below may result in electric shock, fire and/or serious injury.

⚠ **WARNING:** When using electrical appliances, basic safety precautions, including the following, should always be followed to reduce the risk of fire, electric shock, personal injury and material damage.

SAFETY WARNINGS AND INSTRUCTIONS: POLARIZED PLUGS

To reduce the risk of electric shock, this equipment has a polarized plug (one blade is wider than the other). This equipment must be used with a suitable polarized 2 wire or 3 wire extension cord. Polarized connections will fit together only one way. Make sure that the receptacle end of the extension cord has large and small blade slot widths. If the plug does not fit fully into the extension cord, reverse the plug. If it still does not fit, obtain a suitable extension cord. If the extension cord does not fit fully into the outlet, contact a qualified electrician to install the proper outlet. Do not change the tool plug or extension cord in any way.

Minimum Gauge for Cord Sets

Volts			**Total Length of Cord in Feet**			
120V		0-25 (0-7,6m)	26-50 (7,6-15,2m)	51-100 (15,2-30,4m)	101-150 (30,4-45,7m)	
240V		0-50 (0-15,2m)	51-100 (15,2-30,4m)	101-200 (30,4-60,9m)	201-300 (60,9-91,4m)	
Ampere Rating						
More Than		Not more Than	American Wire Gauge			
0	-	6	18	16	16	14
6	-	10	18	16	14	12
10	-	12	16	16	14	12
12	-	16	14	12	Not Recommended	

- Read all of this manual carefully before using the appliance.
- The intended use is described in this manual. The use of any accessory or attachment or the performance of any operation with this appliance other than those recommended in this instruction manual may present a risk of personal injury.
- Retain this manual for future reference.

USING YOUR APPLIANCE

- Do not direct steam at people, animals, electrical appliances or electrical outlets.
- Do not expose to rain.
- Do not immerse the appliance in water.
- Do not leave the appliance unattended. Keep children away from unit while in use.

- Do not leave the appliance connected to an electrical outlet when not in use.
- Never pull the power cord to disconnect the appliance from the socket. Keep the appliance cord away from heat, oil and sharp edges.
- Do not handle steam cleaner with wet hands.
- Do not pull or carry by cord, use cord as a handle, close door on cord, pull cord around sharp corners or expose cord to heated surfaces.
- Do not use appliance in an enclosed space filled with vapor given off by oil-based paint thinner, some moth-proofing substances, flammable dust, or other explosive or toxic vapors.
- Do not use on leather, wax polished furniture or floors, synthetic fabrics, velvet or other delicate, steam-sensitive materials.
- Do not use on any unsealed hard floor surfaces. Additionally, on surfaces that have been treated with wax or some no-wax floors, the sheen may be removed by the heat and steam action. It is always recommended to test an isolated area of the surface to be cleaned before proceeding. We also recommend that you check the use and care instructions from the floor manufacturer.
- Never put de-scaling, aromatic, alcoholic or detergent products into the steam mop, as this may damage it or make it unsafe for use.
- If the circuit breaker activates while using the steam function, discontinue product use immediately and contact the customer support center. (Beware of the risk of electrical shock.)
- The appliance emits very hot steam to sanitize the area of use. This means that the steam head and cleaning pads get very hot during use.

⚠**CAUTION:** Always wear suitable shoes when using your steam mop and when changing the accessories on your steam mop. Do not wear slippers or open-toed footwear.

- Steam may escape from the appliance during use.
- Care should be taken when using this appliance. DO NOT touch any parts which may become hot during use.

AFTER USE

- Unplug the appliance and allow to cool down before cleaning.
- When not in use, the appliance should be stored in a dry place. Do not store with wet pad.
- Children should not have access to stored appliances.

INSPECTION AND REPAIRS

- Unplug the appliance and allow to cool down before performing any maintenance or repairs.
- Before use, check the appliance for damaged or defective parts. Check for breakage of parts, damage to switches and any other conditions that may affect its operation.
- Regularly check the power cord for damage.
- Do not use the appliance if any part is damaged or defective.
- Have any damaged or defective parts repaired or replaced by an authorized repair agent.
- Never attempt to remove or replace any parts other than those specified in this manual.

SAFETY OF OTHERS

- This appliance is not intended for use by persons (including children) with reduced physical, sensory or mental capabilities, or lack of experience and knowledge, unless they have been given supervision or instruction concerning the use of the appliance by a person responsible for their safety.
- Children should be supervised to ensure that they do not play with the appliance.

RESIDUAL RISKS

Additional residual risks may arise when using the tool which may not be included in the enclosed safety warnings. These risks can arise from misuse, prolonged use, etc.
Even with the application of the relevant safety regulations and the implementation of safety devices, certain residual risks can not be avoided. These include:

- Injuries caused by touching any moving parts.
- Injuries caused by touching any hot parts.
- Injuries caused when changing any parts or accessories.
- Injuries caused by prolonged use of the appliance. When using any appliance for prolonged periods ensure you take regular breaks.

FUNCTIONAL DESCRIPTION

1. ON/Off Switch

2. SmartSelect™ Dial

3. Removable Water Tank

4. Handle

5. Steam Head

6. Micro-Fiber Cleaning Pad

7. Bottom Cord Hook

8. Top Cord Hook

9. Hanging Bracket

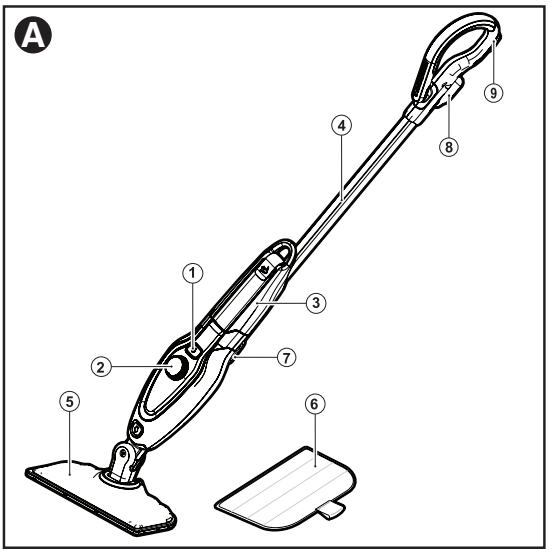

ASSEMBLY

NOTICE: Each steam mop is 100% tested in the factory to ensure product performance and safety. When assembling your new steam mop for the first time you may notice water residue inside of the unit.

⚠**WARNING:** Before attempting any of the following operations, make sure that the appliance is switched off and unplugged and that the appliance is cold and contains minimal or no water.

ATTACHING THE HANDLE - Fig. B& I

- With the cord hooks (8 & 9) toward the back of the appliance, slide the bottom end of the handle tube (4) into the top end of the steam mop body (10) until it is firmly seated and clicks into place.

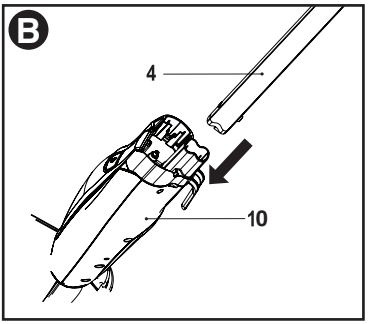

ATTACHING THE STEAM HEAD - Fig. C

- Slide the bottom end of the steam mop body (10) onto the steam head (5) until it clicks into place.
- The steam head can be removed from the steam mop body by pressing the steam head release button (11) and pulling the steam mop body (10) off the steam head (5).

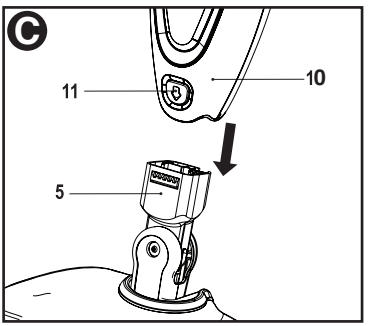

ATTACHING THE WATER TANK

- Clip the water tank (3) onto the handle (4).
- Slide the water tank down into the steam mop body (10), ensure that the water tank is firmly seated.

ATTACHING A CLEANING PAD - Fig. D

Replacement cleaning pads are available from your BLACK+DECKER dealer (cat. no. SMP20).

- Place a micro-fiber cleaning pad (6) on the floor with the 'hook & loop' side facing up.
- Press the steam mop down onto the cleaning pad (6). You are now ready to steam clean and sanitize your floor.

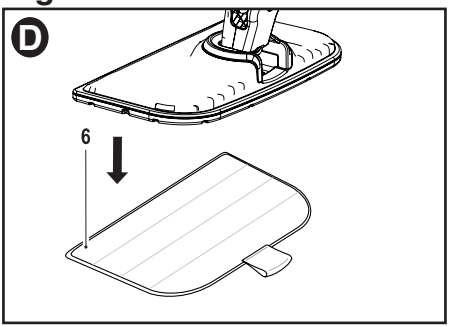

NOTICE: Do not store with a wet pad as this can damage your floor. Always place the steam mop with the handle (4) in the upright position when stationary and make sure the steam mop is turned off when not in use.

REMOVING A CLEANING PAD - Fig. E

⚠**CAUTION:** Always wear suitable shoes when changing the cleaning pad on your steam mop. Do not wear slippers or open-toed footwear.

- Return the handle (4) to the upright position and turn the steam mop 'OFF'.
- Wait until steam mop cools down. (approximately five minutes)
- Place the front of your shoe onto the cleaning pad removal tab (12) and press down firmly.
- Lift the steam mop up off the cleaning pad.

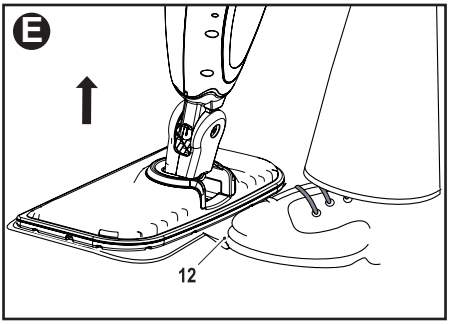

NOTICE: Do not store with a wet pad as this can damage your floor. Always place the steam mop with the handle (4) in the upright position when stationary and make sure the steam mop is turned off when not in use.

FILLING THE WATER TANK - Fig. F & G

NOTICE: The water tank is conveniently removable for easier use.

NOTICE: Fill the water tank with regular tap water.

NOTICE: In areas of very hard water, the use of de-ionized water is recommended.

⚠ **WARNING:** Do not overfill the tank. Only fill to bottom of hole with water tank in vertical position.

- Ensure that the appliance is switched off and the power cord is disconnected from the power supply.
- Place the steam mop with the handle (4) in the upright position.
- Remove the water tank (3) by pulling it upwards.
- Open the filler cap (13) by lifting it up.
- Fill the water tank (3) with water to the bottom of the hole with tank in vertical position.
- Close the filler cap (13).
- Re-install the water tank onto the steam mop body (10) and ensure it is firmly seated.

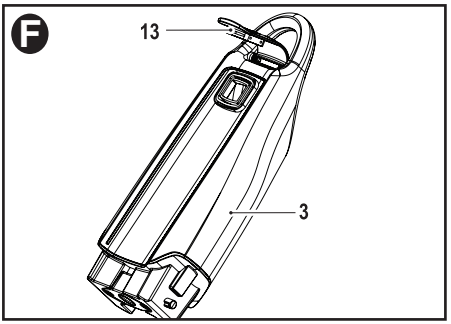

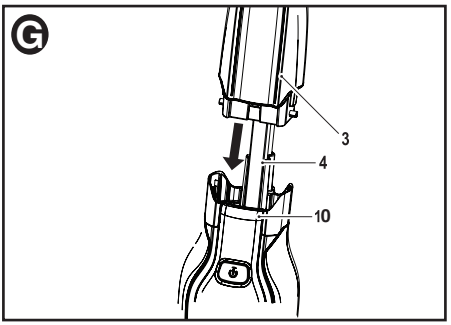

NOTICE: Always empty the water tank after use.

OPERATION

SWITCHING ON AND OFF - Fig. H

⚠CAUTION: FOR FLOOR USE ONLY; DO NOT USE THE UNIT UPSIDE DOWN.

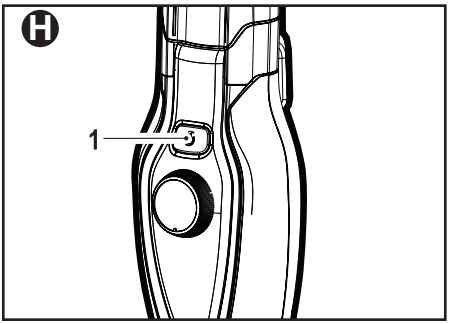

NOTICE: When the steam mop is first turned on the water reservoir will glow red. Once the steam mop is ready to use the water reservoir will glow blue. It takes approximately 15 seconds for the steam mop to heat up.

- To switch the appliance on, press the ON/ OFF button (1).
- To switch the appliance off, press the ON/ OFF button.

NOTICE: Never leave the steam mop in one spot on any surface for any period of time. Do not store with a wet pad as this can damage your floor. Always place the steam mop with the handle (4) in the upright position when stationary and make sure the steam mop is turned off when not in use.

NOTICE: Always empty the water tank after use.

SmartSelect™ Dial

The steam mop is equipped with a SmartSelect™ dial (2) which shows various hard floor surface cleaning applications. They are used to select the correct operating mode for your particular hard floor surface.

NOTICE: Do not use on any unsealed hard floor surfaces. Additionally, on surfaces that have been treated with wax or some no wax floors, the sheen may be removed by the heat and steam action. It is always recommended to test an isolated area of the surface to be cleaned before proceeding. We also recommend that you check the use and care instructions from the floor manufacturer.

Using the SmartSelect™ dial (2), choose from one of the following applications:

The steam mop will select the correct volume of steam required for your particular cleaning operation.

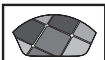	**Stone/Marble**
	**Tiles/Vinyl**
	**Wood/Laminate**

NOTICE: This unit will kill 99.9% of bacteria and germs when used in accordance with this manual and with the micro fiber pad fitted and a continuous run time of 90 seconds.

HINTS FOR OPTIMUM USE

GENERAL USE

⚠CAUTION: Never use the steam mop without first attaching a cleaning pad.
⚠WARNING: It is important to monitor the water level in the water tank. To refill the water tank and continue to sanitize/ clean, see the Filling Water Tank section.

NOTICE: Never leave the steam mop in one spot on any surface for any period of time. Do not store with a wet pad as this can damage your floor. Always place the steam mop with the handle (4) in the upright position when stationary and make sure the steam mop is turned off when not in use.

- **Always vacuum or sweep the floor before using the steam mop.**
- The easiest way to use the steam mop is to tilt the handle to a 45˚ angle and clean slowly, covering a small area at a time.
- **Do not use chemical cleaners with your steam mop.** To remove stubborn stains from vinyl or linoleum floors, you can pre-treat them with a mild detergent and some water before using the steam mop.

STEAM CLEANING

- Place a cleaning pad (6) on the floor with the 'hook & loop' side facing up.
- Lightly press the steam mop down onto the cleaning pad.
- Plug the steam mop electric cord into the outlet.
- Press the ON/OFF button (1). It takes approximately 15 seconds for the steam mop to heat up.
- Rotate the **SmartSelect™** dial (2) until the required setting is reached.
- Pulling the handle (4) back will activate the steam pump. After a few seconds steam will start to come out of the steam head.

NOTICE: If the system has been run dry it may take up to 30 seconds to prime the system on first use.

- It takes a few seconds for steam to enter the cleaning pad. The steam mop will now glide easily over the surface to be sanitized/cleaned.
- Push and pull the steam mop slowly across the floor to thoroughly steam clean each section.
- When you have finished using the steam mop, return the handle (4) to the upright position and turn it 'OFF', and wait until the steam mop cools down (approximately five minutes).

AFTER USE - Fig. I

- Return the handle (4) to the upright position and turn the steam mop 'OFF'.
- Wait until the steam mop cools down. (approximately five minutes)
- Unplug the steam mop from the wall outlet.
- Empty the water tank (3).
- Remove the cleaning pad (6) and wash it so that it is ready for the next use. (Take care to follow the wash care instructions printed on the cleaning pad).
- Wrap the electric cord around the cord hooks (8 & 9).

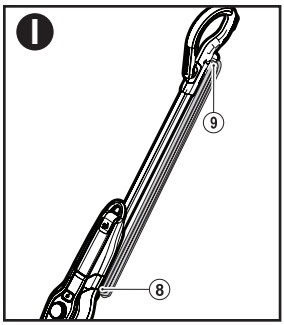

NOTICE: The top cord hook rotates to easily release the cord for the next use.

NOTICE: With the handle (4) in the upright position, the cord neatly wrapped around the cord hooks (8 & 9), your steam mop will stand on its own for storage. Alternatively there is a hanging bracket built into the hand grip which will allow your steam mop to be hung from a suitable hook on the wall. Always ensure that your wall hook is capable of supporting the weight of the steam mop safely.

MAINTENANCE AND CLEANING

Your BLACK+DECKER corded appliance has been designed to operate over a long period of time with a minimum of maintenance. Continuous satisfactory operation depends upon proper appliance care and regular cleaning.

⚠ **WARNING:** Before performing any maintenance or cleaning on corded appliances switch off and unplug the appliance.

- Clean your appliance using a soft damp cloth. Never let any liquid get inside the appliance; never immerse any part of the appliance into a liquid. **IMPORTANT:** To assure product SAFETY and RELIABILITY, repairs, maintenance and adjustment should be performed by authorized service centers or other qualified service organizations, always using identical replacement parts.
- For stubborn marks you can use a mild solution of soap and water to dampen your cloth.

CARE OF THE CLEANING PADS

NOTICE: Follow the cleaning instructions printed on the label of your cleaning pad.

Wash care instructions - Machine wash warm 140°F (60°C) - No bleach - No fabric softener - Air dry only - Allow to dry fully before re-use.

ACCESSORIES

Recommended accessories for use with your appliance are available from your local dealer or authorized service center.

⚠ **WARNING:** The use of any accessory not recommended for use with this appliance could be hazardous.

TROUBLESHOOTING

PROBLEM	POSSIBLE CAUSE	POSSIBLE SOLUTION
• Unit will not start.	• Cord not plugged in.	• Plug appliance into a working outlet.
	• Main switch not on.	• Turn main switch on.
	• Floor head not correctly fitted.	• Ensure floor head is correctly attached.
	• Circuit fuse is blown.	• Replace circuit fuse. (If the product repeatedly causes the circuit fuse to blow, discontinue use immediately and have it serviced at a BLACK+DECKER service center or authorized servicer.)
	• Circuit breaker is tripped.	• Reset circuit breaker. (If the product repeatedly causes the circuit breaker to trip, discontinue use immediately and have it serviced at a BLACK+DECKER service center or authorized servicer.)
	• Cord or switch is damaged.	• Have cord or switch replaced at a BLACK+DECKER Service Center or Authorized Servicer.
• Mop will not make steam.	• No water in water tank.	• Add water to the water tank.
	• Tank not fitted correctly.	• Ensure tank is fully attached and seated.
• Mop leaves water on floor.	• Cleaning pad is too wet.	• Unplug unit from power outlet and change the micro-fiber cleaning pad.
• Mop left spot on floor.	• Mop left in one spot too long.	• Never leave the steam mop on the floor with a damp or wet cleaning pad still attached when not in use.
	• Hard water.	• Use distilled water.