BILL OF MATERIALS

ITEM	QTY.	U/M	PACKING ISP INT	DESCRIPTION
1	1	EA		DRIVER SIDE TIP SECTION
2	1	EA		PASSENGER SIDE TIP SECTION
3	2	EA		CLAMP- 2.25″ BAND
4				
5				
6				
7				
8				

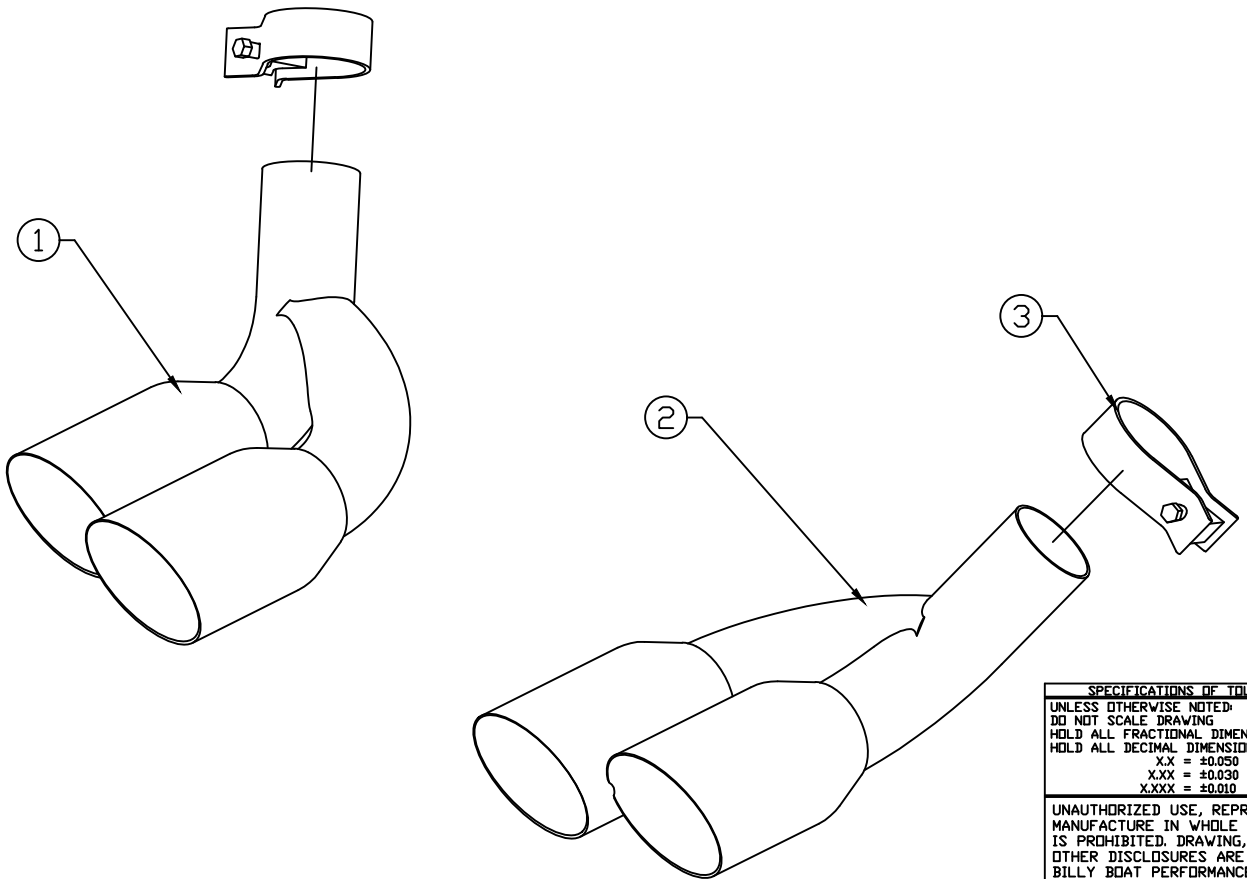

DEBURR ALL SHARP EDGES

REV.	DATE	E.C.N. NO.	BY

SPECIFICATIONS OF TOLERANCES:
UNLESS OTHERWISE NOTED:
DO NOT SCALE DRAWING
HOLD ALL FRACTIONAL DIMENSIONS TO ±1/16
HOLD ALL DECIMAL DIMENSIONS TO:
X.X = ±0.050
X.XX = ±0.030
X.XXX = ±0.010

UNAUTHORIZED USE, REPRODUCTION OR MANUFACTURE IN WHOLE OR IN PART IS PROHIBITED. DRAWING, DESIGN AND OTHER DISCLOSURES ARE PROPERTY OF BILLY BOAT PERFORMANCE EXHAUST

997 B&B QUAD TIPS PAIR

SCALE: NTS | DWN.: AWL
DATE: 2-07-08 | SHT.: 1 OF 1
APPROVAL DATE: | APPROVED BY:

Billy Boat Performance Exhaust

UNIT(S) INCH | JOB NUMBER: | DRAWING NO. FPOR2050