# *INSTALL MANUAL*

# 2005-2010 GM 6.6L (LLY, LZB, LMM) Duramax Positive Air Shutoff 2.5" CAC TUBES

| | |
|---|---|
| P/N# | 1036712 |
| P/N# | 1036712-M |

***PLEASE READ ALL INSTRUCTIONS BEFORE INSTALLATION***

***An Information decal has been provided in this kit. This may allow safety personal and inspector's to quickly identify that your vehicle is equipped with a BD Positive Air Shut Down unit. Install this decal in a visible location on the inside glass of the vehicle.***

# K I T  C O N T E N T S :

Please check to make sure that you have all the parts listed in this kit ***before*** you start the disassembly of your truck.

| ***1036712 Kit Contents*** | | |
|---|---|---|
| **1302300-A** | **1302242-A** | **1302272** |
| 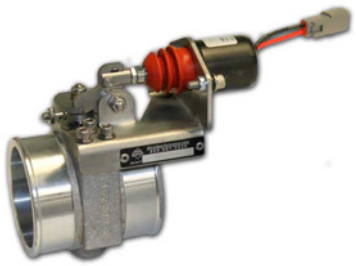 |  |  |
| *Air Shutoff Valve* | *Wiring Harness* | *2.5”-3 ¼” Silicone Boot* |
| **Qty: 1** | **Qty: 1** | **Qty: 2** |

| **1302281** | **1302282** | **1407030** | **1405208** |
|---|---|---|---|
| 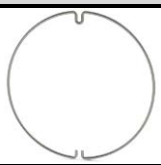 |  |  |  |
| *2.5” PAS Bead Ring* | *PAS Drill Template* | *0350 Clamps* | *2.59-2.94” Clamps* |
| **Qty: 2** | **Qty: 2** | **Qty: 2** | **Qty: 2** |

| **1800060** | **1301381** | **1306710** | **1302285** |
|---|---|---|---|
| 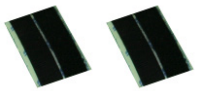 |  |  |  |
| *Velcro strips* | *Heat Shrink* | *Duramax Electronic Module* | *Solder* |
| **Qty: 2 x 4”** | **Qty: 3”** | **Qty: 1** | **Qty: 5”** |

| ***1036712-M Kit Contents*** | | | |
|---|---|---|---|
| **1302300-A** | | **1302249-A** | **1302272** |
| 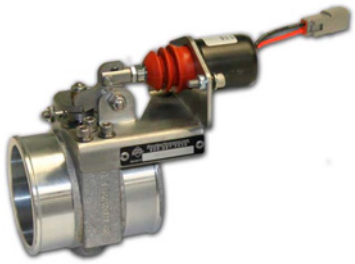 | |  |  |
| *Air Shutoff Valve* | | *Wiring Harness* | *2.5”-3 ¼” Silicone Boot* |
| **Qty: 1** | | **Qty: 1** | **Qty: 2** |
| | | | |
| **1302281** | **1302282** | **1407030** | **1405208** |
| 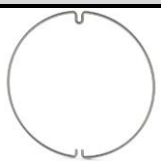 | 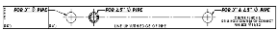 |  |  |
| *2.5” PAS Bead Ring* | *PAS Drill Template* | *0350 Clamps* | *2.59-2.94” Clamps* |
| **Qty: 2** | **Qty: 2** | **Qty: 2** | **Qty: 2** |

## WELCOME

Thank you for purchasing a BD Diesel Performance positive air shutoff. This manual is divided into different areas to assist you with your installation and operation of your positive air shutoff. This product is a safety product and should be tested often. Installation should occur on a vehicle properly secured to prevent rolling.

# TABLE OF CONTENTS



## REQUIRED TOOLS

- Frequency/Voltmeter (Suggested)
- Drill
- 1/8”, 11/32” Drill Bit
- 1/2” Unibit
- Electrical Tape
- Soldering Iron
- Air or Manual Ratchet
- 7/16”, 1/2” Sockets
- Wire Strippers
- Heat Gun
- Band Saw or reciprocating saw or cutoff wheel.

## MAINTENANCE

The only maintenance required is to test the valve operation at regular intervals. Please see the testing section later in the manual for the correct procedure.

## INSTALLATION with OVER SPEED ELECTRONICS (1036712)

**VEHCILE SHOULD BE SAFELY SECURED BEFORE INSTALLATION.**

1. Block the wheels of the vehicle to prevent the vehicle from rolling.

   Open the hood.

2. You will need to remove the driver's side Charge Air Cooler (CAC) tube.

   Remove the driver's side upper silicone boot at the Charge Air cooler tube connection/turbocharger connection.

   Then remove the lower boot to tube connection.

   It is highly suggest that you remove the driver's side front inner fender liner. It will allow you easier access to the tube and the connections.

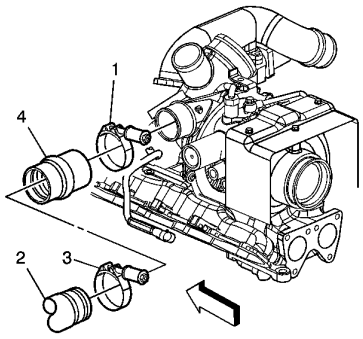


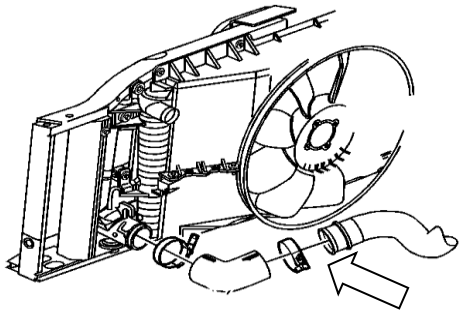

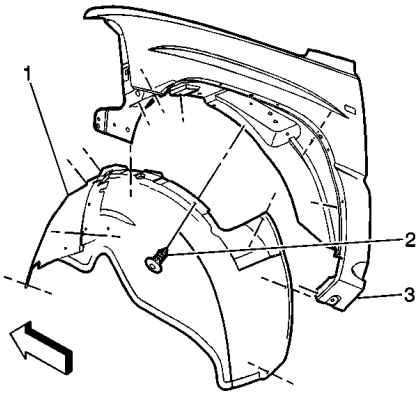

3. With the driver's side CAC tube removed, lay it flat on a work bench.

First identify the turbo inlet and the CAC outlet side of the tube.

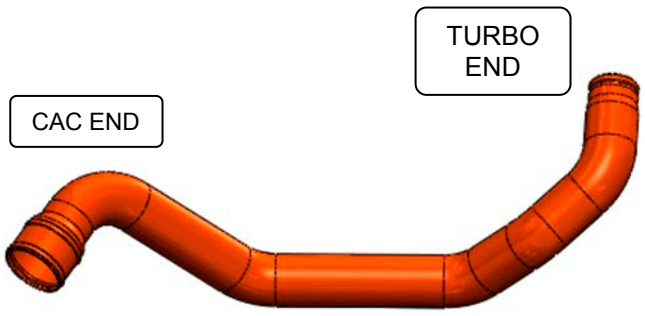


4. You will need to make two cuts to this tube. The first cut is relatively easy.

Locate the two bends in question, (see graphic to the side). Once the bends have been located, move inwards towards the straight section 1.5". This is your cut line. Use a hack saw, sawzall or angle cutter to cut at the correct location.

Be sure to cut perpendicular or square to outside of the pipe. DO NOT CUT AT AN ANGLE.

The section you remove should be approximately 5" long.

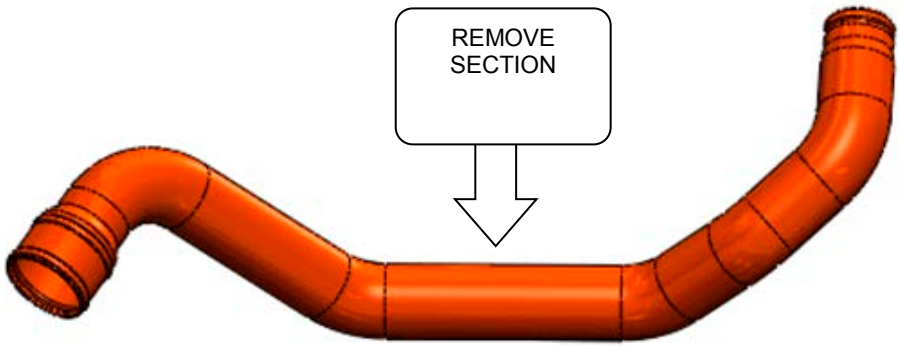


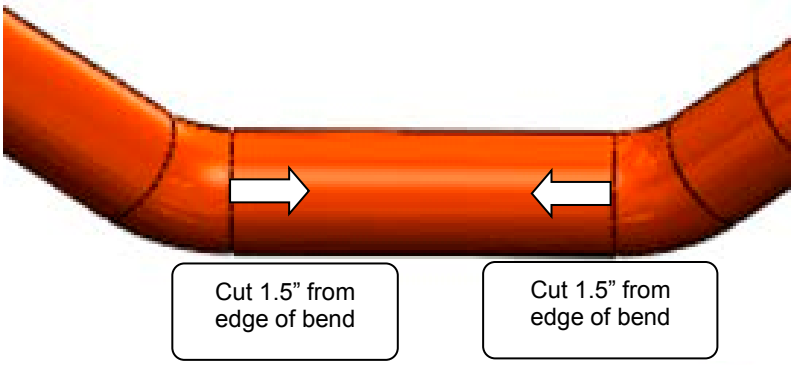


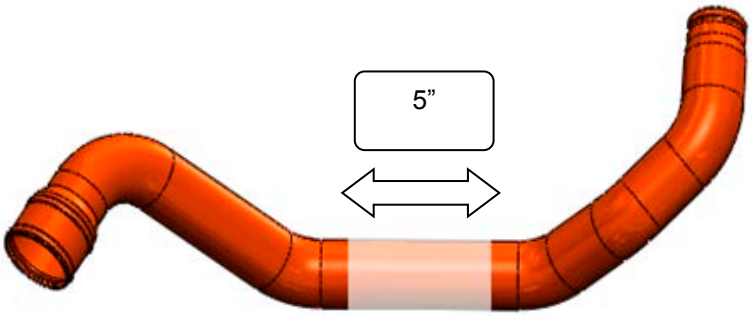

5. With the pipe cut, you will now need to drill a couple of holes to secure the boot bead on both ends of the pipe.

6. Firstly, remove the backing from drill template sticker and wrap around pipe. The edge of the sticker should line up with the edge of the pipe.

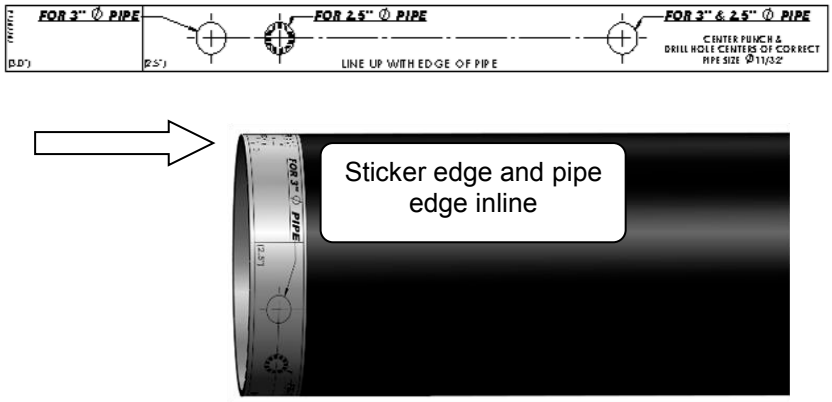


## YOU WILL USED THE 2.5" TEMPLATE MARKS

For the 2.5" pipe the sticker should wrap perfectly around the pipe, the start of the sticker should meet the end of the sticker.

7. With the sticker in place use a center punch and then use a **Ø1/8"** drill bit and drill a hole in the center of the holes marked **"For 2.5"Ø".**

There will be two holes and they should be perfectly 180° inline with each other through the pipe.

**DO NOT DRILL COMPLETELY THROUGH THE PIPE AND OUT THE OTHER END. YOU WILL NEED TO DRILL ONE SIDE THEN ROTATE, AND THEN DRILL THE OTHER SIDE.**

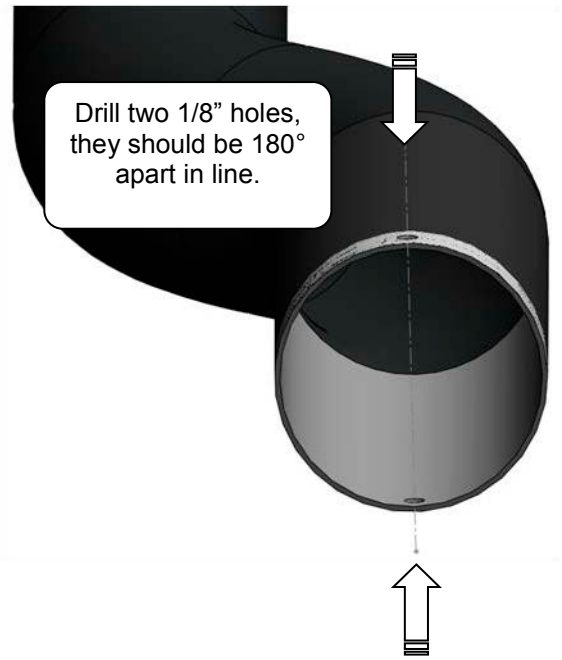

8. Once the pilot holes are drilled you will need to drill an **Ø11/32”** hole through the pilot holes.

   You can now remove the sticker.

   **You must deburr the inside of the drilled holes.**

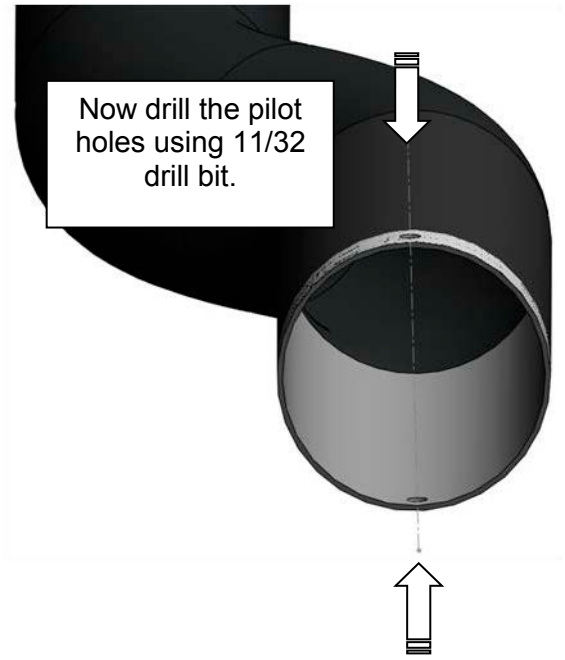


9. Once the holes are drilled, install the ring bead around the pipe. Lock each end of the ring bead into each hole.

   You can use a needle nose plier to tweak or adjust the ring fit slightly.

   Be careful not to bend the ring bead too much as you will weaken it.

   Note the ring bead does not have to be perfectly tight or snug around the pipe, as we will be installing a silicone boot over top of it.

   With the ring bead in place, you should not be able to pull the ring bead off axially from the tube.

| | |
|---|---|
| 10. With the holes and bead rings installed in both pipes you can now install the silicone boots and then the positive air shutoff valve. | 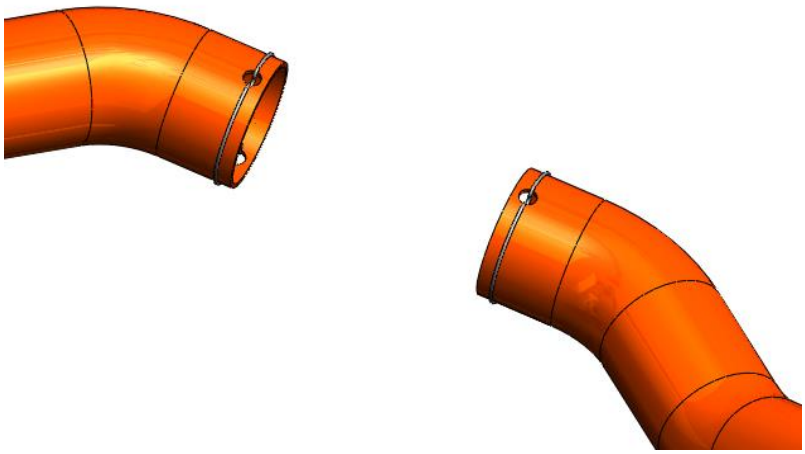 |
| 11. Install the two 2 ½ - 3 ¼ step boots (#1302272) over each CAC tube and their respective boot beads. | 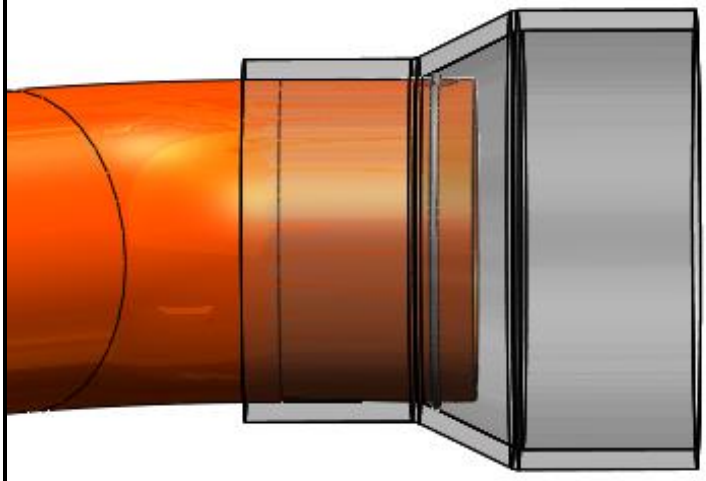 |
| 12. Once you have installed both silicone boots over each of the CAC tubes. You can now install the PAS valve. Please note the flow orientation arrow on the side of the casting. This is the direction of air flow. | 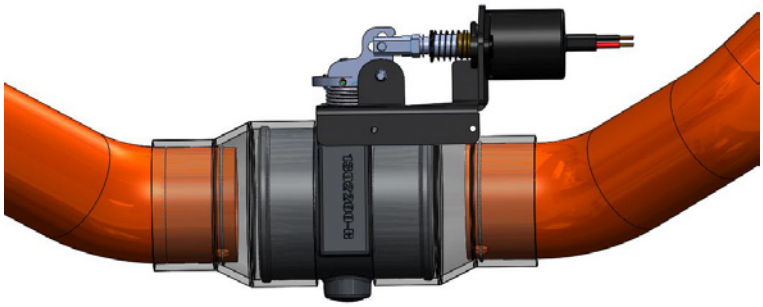 |

**Please note the flow orientation.**

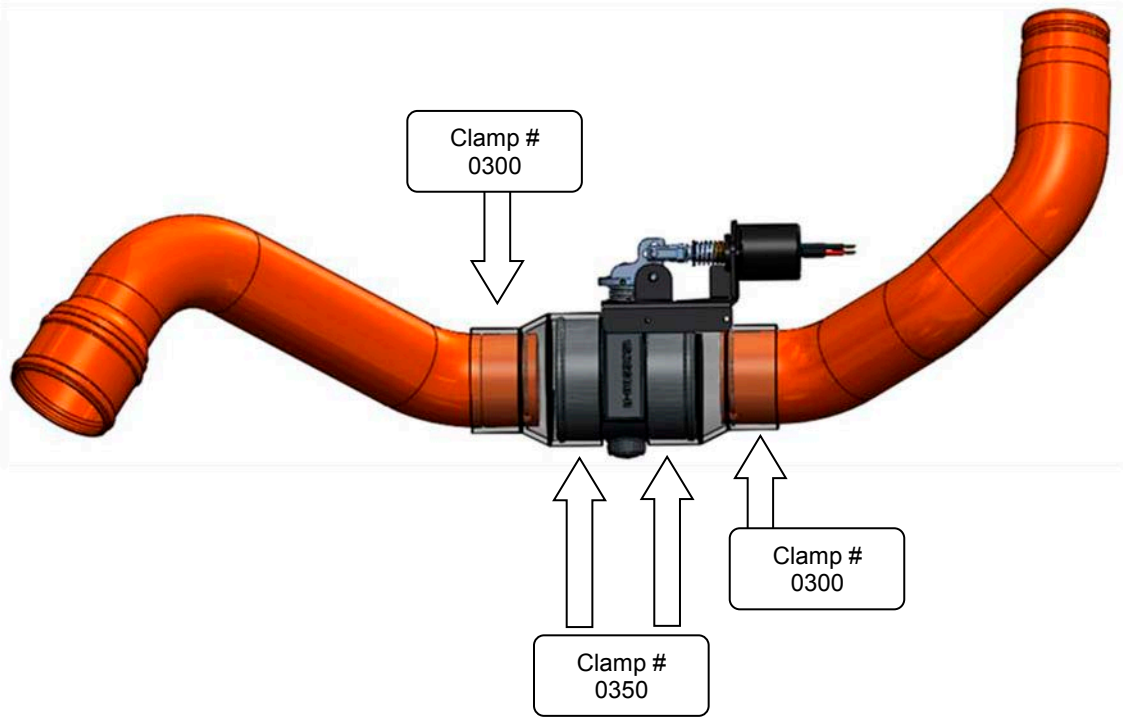


13. Install all clamps loosely until proper in vehicle fitment can be determined.

14. Install PAS tube assembly into the vehicle.

    Install the lower CAC side first, and then install the turbo connection last.

    Note that you will need to rotate the tubes you achieve perfect alignment. Once you are happy with fit and the PAS unit will not contact any other components or vibrations.

    Tighten all spring clamps until the spring is spring bound.

***BE SURE TO ORIENT THE PAS VALVE SO THE LINKAGE IS EASILY RESETTABLE***

15. Reinstall wheel well/fender liner.

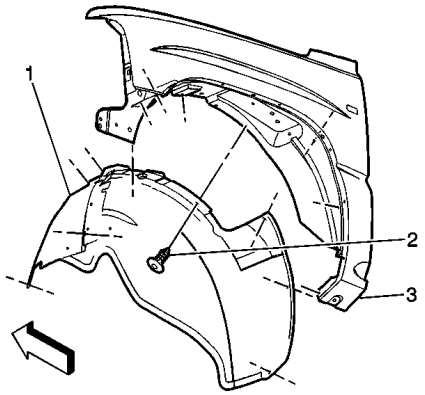


16. Lay out supplied wiring harness over top of the engine.

17. You will then need to route the switch through the firewall on the driver's side (note you will need to remove the switch from the harness to accomplish this). See wiring diagram on page 33

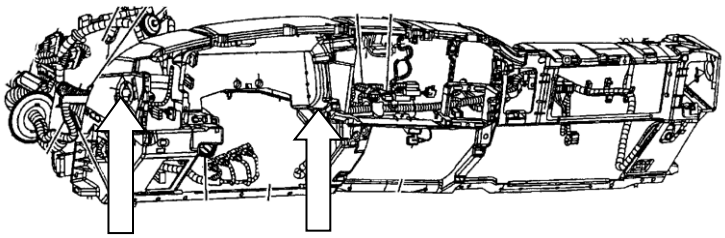

Choose a highly visible location for the switch and mount it to the dash.

**18. Using a 1/8" drill, drill a pilot hole in the location you have selected for the switch to be mounted.**

19. **Finally using a ½" UNIBIT drill bit, drill an exact ½" round hole.**

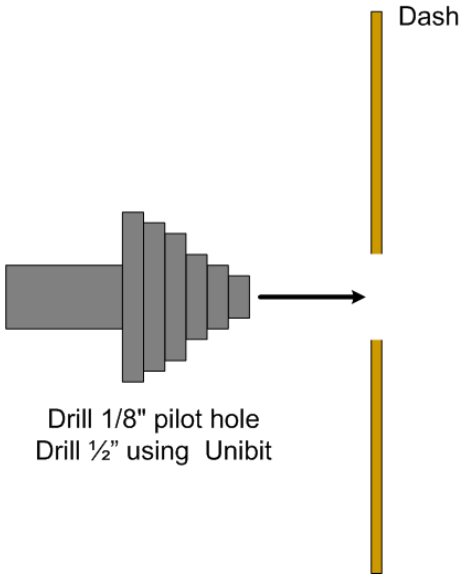


20. Once you have the mounting hole drilled, insert the switch from the backside.

Reinstall the correct wires to the correct switch terminals.

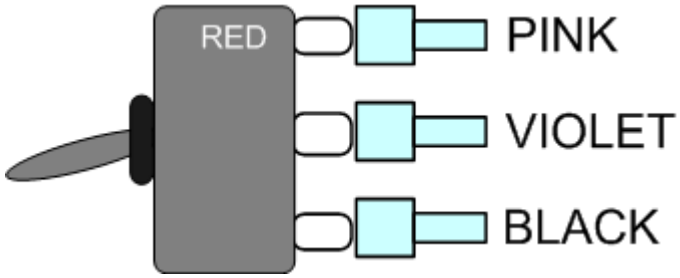

21. Mount the switch so that the groove on the thread boss is facing down.

    Adjust the HEX washer/nut so that the switch threads do not protrude an unsightly amount.

**Switch install with decal**

Apply the supplied decal to the dash and tighten the round plastic nut.

**Switch install with Guard**

Install the switch guard onto the switch by aligning the tab with the groove on the thread boss.

Then tighten on the round plastic nut and apply the decal to the switch guard.

## Switch install with Decal

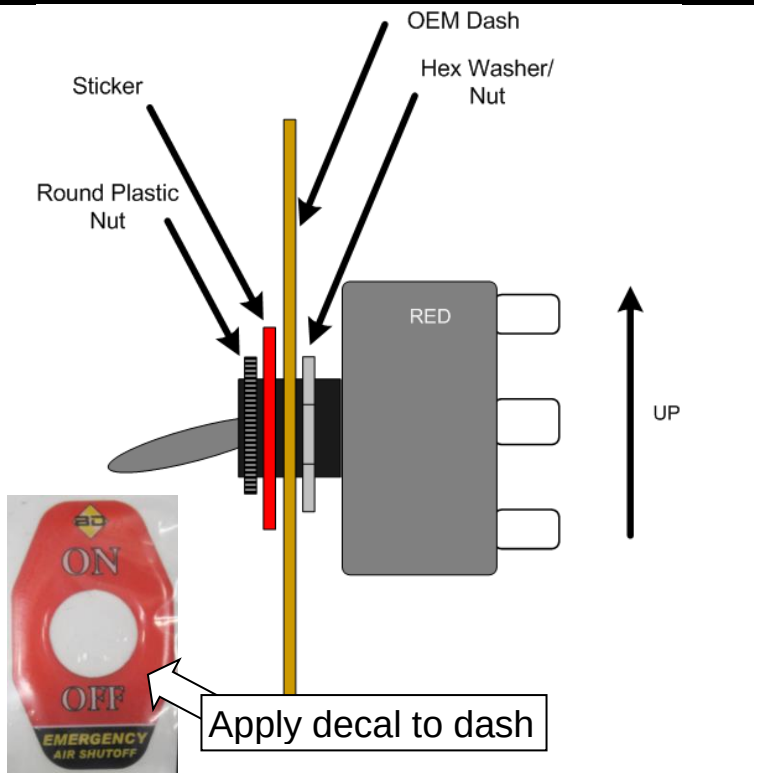


## Switch Install with Guard

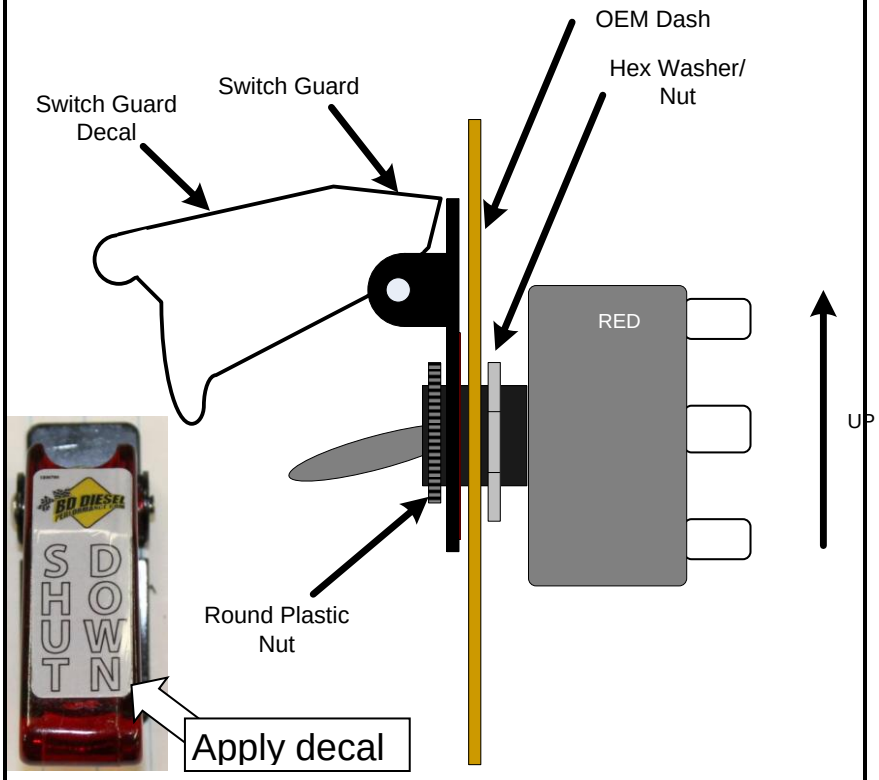

22. Now underneath the hood locate and connect the weather pack connector on the wiring harness to the solenoid on the PAS valve. See page 33 for more info.

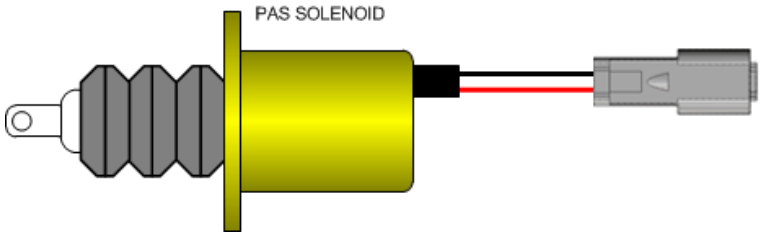


## *2004.5-2007 VEHCILES*

23. You will now need to locate the CRANKSHAFT SENSOR Wire.

    Locate Connector #C107.

24. You will need to remove the upper connector to gain access to the lower C107 connector. C107 has 38 pins.

    Locate the correct wire using the tables below.

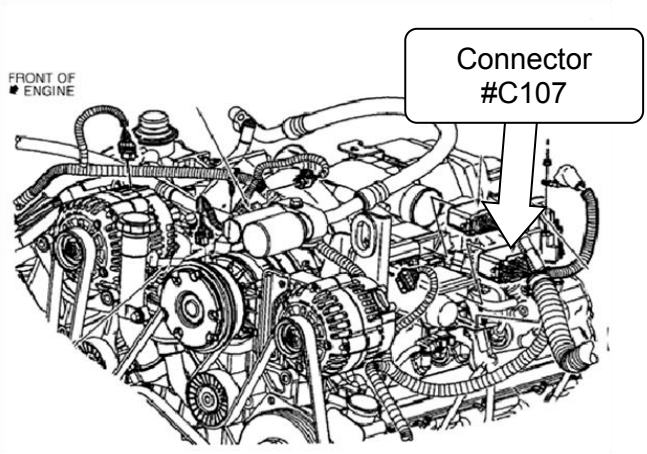

## *2004.5-2005 VEHICLES*

**C107 Main Engine Harness to Engine Jumper Harness (Diesel)**

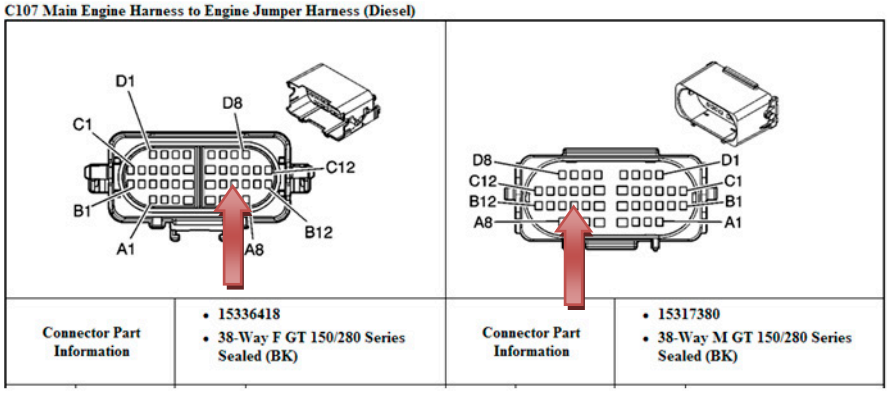


| | | | | | | | |
|---|---|---|---|---|---|---|---|
| B4 | BN/WH | 633 | CMP Sensor Signal | B4 | BN/WH | 633 | CMP Sensor Signal |
| B5 | PK/BK | 632 | Low Reference | B5 | PK/BK | 632 | Low Reference |
| B6-B7 | - | - | Not Used | B6-B7 | - | - | Not Used |
| B8 | YE/BK | 1868 | Low Reference | B8 | YE/BK | 1868 | Low Reference |
| B9 | D-BU/WH | 1869 | CKP Sensor Signal | B9 | D-BU/WH | 1869 | CKP Sensor Signal |
| B10 | L-GN | 1867 | 12-Volt Reference | B10 | L-GN | 1867 | 12-Volt Reference |
| B11 | YE /BK | 846 | Fuel Injector 6 Control | B11 | YE /BK | 846 | Fuel Injector 6 Control |
| B12 | PK/BK | 1746 | Fuel Injector 3 Control | B12 | PK/BK | 1746 | Fuel Injector 3 Control |
| C1 | BK | 1744 | Fuel Injector 1 Control | C1 | BK | 1744 | Fuel Injector 1 Control |
| C2 | BK/WH | 845 | Fuel Injector 5 Control | C2 | BK/WH | 845 | Fuel Injector 5 Control |
| C3 | TN | 2917 | 5-Volt Reference | C3 | TN | 2917 | 5-Volt Reference |
| C4 | OG/BK | 2919 | Low Reference | C4 | OG/BK | 2919 | Low Reference |
| C5 | YE | 2918 | FRP Sensor Signal | C5 | YE | 2918 | FRP Sensor Signal |
| C6 | PK | 239 | Ignition 1 Voltage | C6 | PK | 239 | Ignition 1 Voltage |
| C7 | - | - | Not Used | C7 | - | - | Not Used |
| C8 | L-BU | 2832 | Engine Speed Signal | C8 | L-BU | 2832 | Engine Speed Signal |

PIN B9 DARK BLUE W/WHITE

## *2006-07 VEHICLES (LBZ)*

**C107 Main Engine Harness to Engine Jumper Harness (Diesel)**

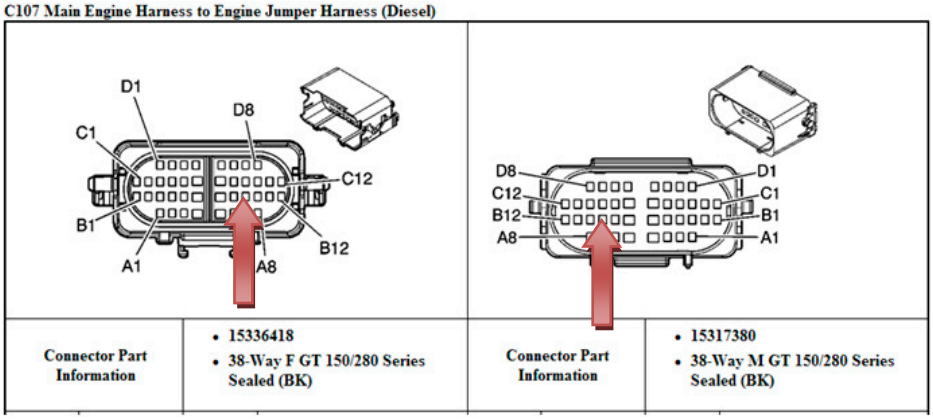


| Connector Part Information | • 15336418<br>• 38-Way F GT 150/280 Series Sealed (BK) | Connector Part Information | • 15317380<br>• 38-Way M GT 150/280 Series Sealed (BK) |
|---|---|---|---|

| | | | | | | | |
|---|---|---|---|---|---|---|---|
| B3 | D-BU | 6259 | 5-Volt Reference | B3 | D-BU | 6259 | 5-Volt Reference |
| B4 | D-BU/WH | 6256 | CMP Sensor Signal | B4 | BN/WH | 6256 | CMP Sensor Signal |
| B5 | BN | 6266 | Low Reference | B5 | PK/BK | 6266 | Low Reference |
| B6 | PK/BK | 1746 | Fuel Injector 3 Control | B6 | PK/BK | 1746 | Fuel Injector 3 Control |
| B7 | TN/WH | 845 | Fuel Injector 5 Control | B7 | BK/WH | 845 | Fuel Injector 5 Control |
| B8 | GY/BK | 6272 | Low Reference | B8 | YE/BK | 6272 | Low Reference |
| B9 | WH/BK | 6271 | CKP Sensor Signal | B9 | D-BU/WH | 6271 | CKP Sensor Signal |
| B10 | PU/WH | 6270 | 5-Volt Reference | B10 | L-GN | 6270 | 5 Volt Reference |
| B11-B12 | - | - | Not Used | B11-B12 | - | - | Not Used |
| C1-C2 | - | - | Not Used | C1-C2 | - | - | Not Used |
| C3 | TN | 2917 | 5-Volt Reference | C3 | TN | 2917 | 5-Volt Reference |
| C4 | OG/BK | 2919 | Low Reference | C4 | OG/BK | 2919 | Low Reference |
| C5 | YE | 2918 | FRP Sensor Signal | C5 | YE | 2918 | FRP Sensor Signal |
| C6 | PU | 5423 | Injector Positive Voltage Control Group 3 | C6 | PU | 5423 | Injector Positive Voltage Control Group 3 |
| C7 | PK | 5425 | Injector Positive Voltage Control Group 4 | C7 | PK | 5425 | Injector Positive Voltage Control Group 4 |
| C8 | - | - | Not Used | C8 | - | - | Not Used |
| C9 | YE | 2834 | Fuel Pressure Regulator Solenoid Control | C9 | YE | 2834 | Fuel Pressure Regulator Solenoid Control |
| C10 | PU/WH | 2530 | Fuel Pressure Regulator Solenoid Supply Voltage | C10 | PU/WH | 2530 | Fuel Pressure Regulator Solenoid Supply Voltage |

**PLEASE NOTE ON THIS MODEL YEAR ONE SIDE OF CONNECTOR c107 THE WIRE IS LISTED AS WH/BK, WHILE THE OTHER IS D-BU/WH.**

| PIN B9 | WH/BK and D-BU/WH |
|---|---|

## *2008-2010 VEHICLES*

25. You will now need to locate the CRANKSHAFT SENSOR Wire.

    Locate Connector #X108.

26. This is the upper connector, it has 40 pins.

    Locate the correct wire using the tables below.

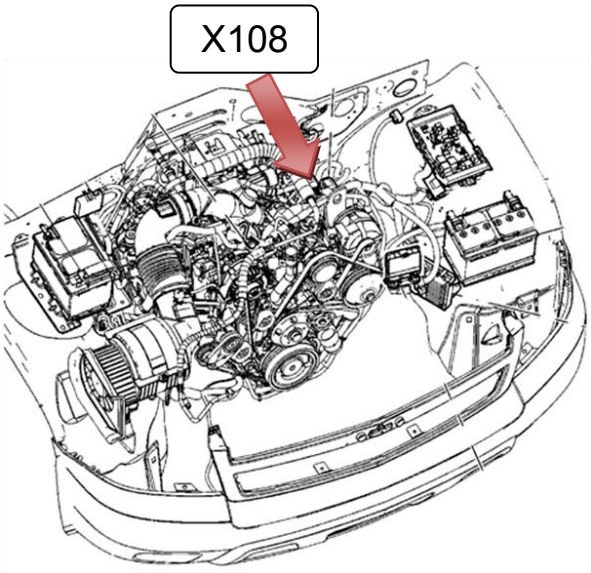


## 2008-2009 Vehicles (LMM)

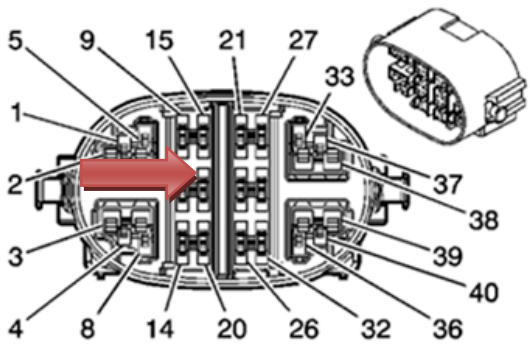


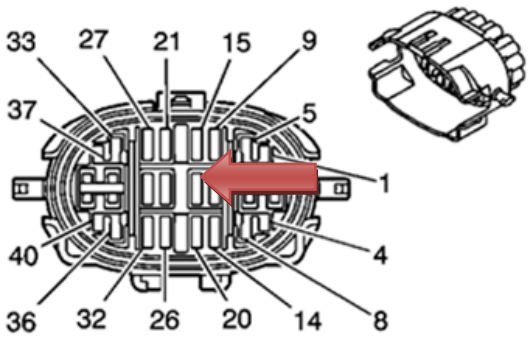

| | | | | | | | |
|---|---|---|---|---|---|---|---|
| 8 | 0.5 YE/BK | 6120 | Low Reference | 8 | 0.5 YE/BK | IC189 | Low Reference |
| 9-14 | - | - | Not Used | 9-14 | - | - | Not Used |
| 15 | 0.5 PU/WH | 6270 | 5-Volt Reference | 15 | 0.5 PU/WH | IC23 | 5-Volt Reference |
| 16 | 0.5 GY/BK | 6272 | Low Reference | 16 | 0.5 GY/BK | IC25 | Low Reference |
| 17 | 0.5 WH/BK | 6271 | CKP Sensor Signal | 17 | 0.5 WH/BK | IC24 | CKP Sensor Signal |
| 18 | 0.5 L-GN | 432 | MAP Sensor Signal | 18 | 0.5 L-GN | IC94 | MAP Sensor Signal |
| 19 | 0.5 OG/BK | 469 | Low Reference | 19 | 0.5 OG/BK | IC93 | Low Reference |
| 20 | 0.5 GY | 2704 | 5-Volt Reference | 20 | 0.5 GY | IC92 | 5-Volt Reference |
| 21 | 0.5 TN | 2917 | 5-Volt Reference | 21 | 0.5 TN | IC37 | 5-Volt Reference |
| 22 | 0.5 OG/BK | 2919 | Low Reference | 22 | 0.5 OG/BK | IC46 | Low Reference |
| 23 | 0.5 YE | 2918 | FRP Sensor Signal | 23 | 0.5 YE | IC40 | FRP Sensor Signal |
| 24 | 0.5 D-BU/WH | 6265 | CMP Sensor Signal | 24 | 0.5 D-BU/WH | IC27 | CMP Sensor Signal |
| 25 | 0.5 BN | 6266 | Low Reference | 25 | 0.5 BN | IC28 | Low Reference |
| 26 | 0.5 D-BU | 6259 | 5-Volt Reference | 26 | 0.5 D-BU | IC26 | 5-Volt Reference |

PIN 17 WH/BK

27. Being that the RPM signal is critical you will need to solder the connection.

    Using wire strippers create a 1” window/gap in insulation of the wire.

    Then strip about 1” of insulation of the RPM signal wire of the BLUE wire from the PAS wiring harness.

    Wrap the copper wire around the factory RPM signal wire and solder this connection.

    Then use electrical tape to wrap this connection so that it is water tight.

    You can also cut the factory crank signal wire and use heat shrink tubing if you would like.

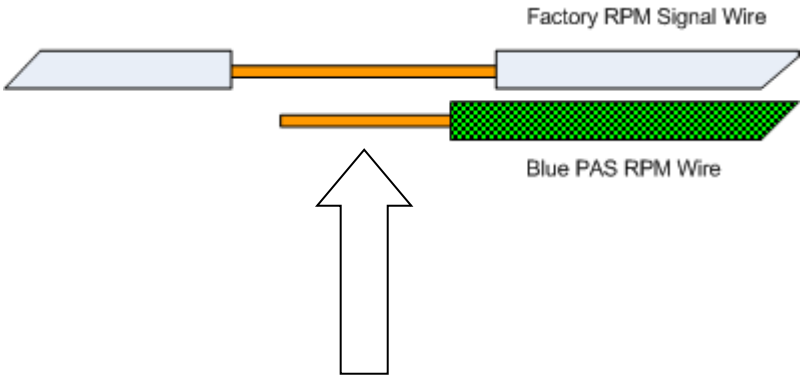


Solder the connection and then wrap and seal with electrical tape

| | |
|---|---|
| 28. Next on the PAS wiring harness connection the BLACK and RED wires to the respective power and ground connections. This connection should be made on the auxiliary power connection on the driver's side of the motor. | 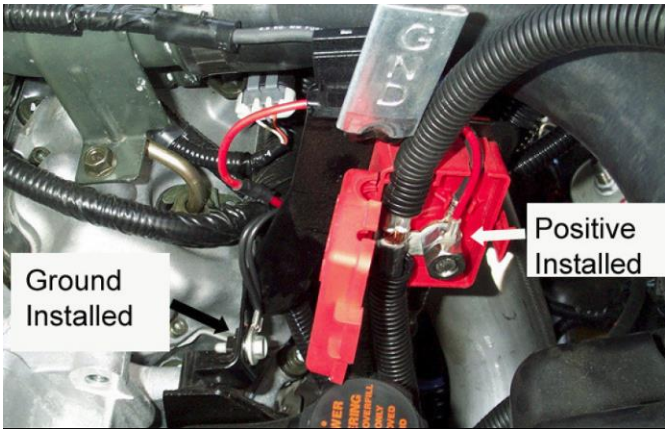 |

29. For the last connection you will need to locate ignition power. This will power the automatic over speed control box LED switch. Note that they unit can still be activated manually with the switch at any time.

    Locate the battery junction box at the driver's side rear of the engine compartment.

    You will need to remove the vacuum pump that is mounted to the top of the junction box.

    Open the junction box and locate the correct ignition powered fuse.

    Locate appropriate fused ignition power circuit (see table below). Install fuse tapper on to fuse, reinstall fuse. Connect yellow lead wire with flag connector to this new connection. Route wire out of the box and close lid and kick panel. Re-attached vacuum pump.

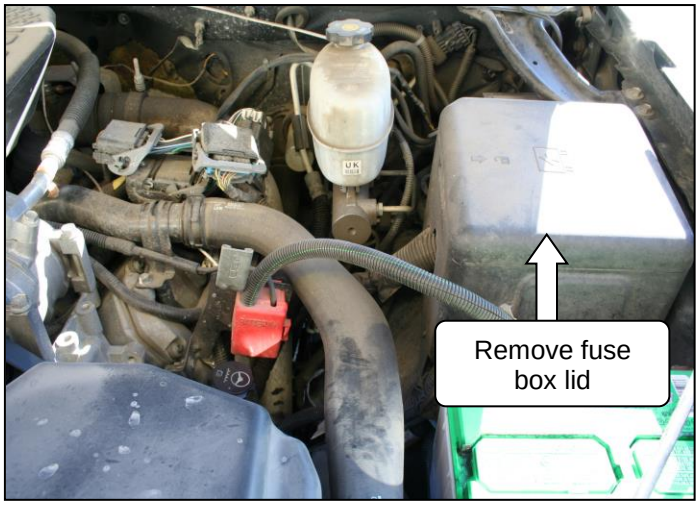


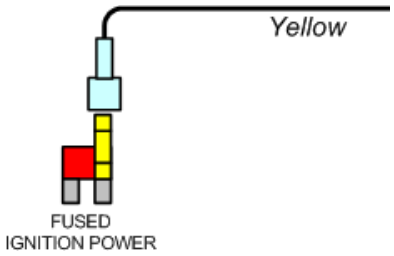

| 2008-2009 Vehicles (LMM) | 2004.5-2007 Vehicles (LLY, LBZ) |
|---|---|
| HVAC #52 (10AMP) | HVAC (10AMP) |
| 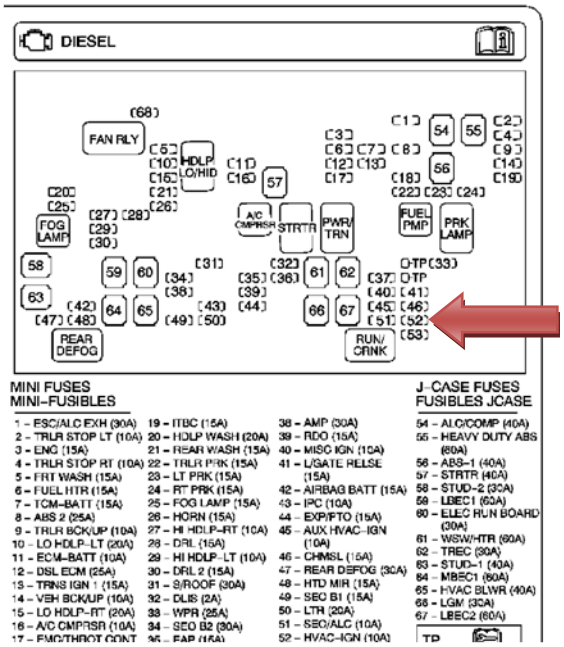 | 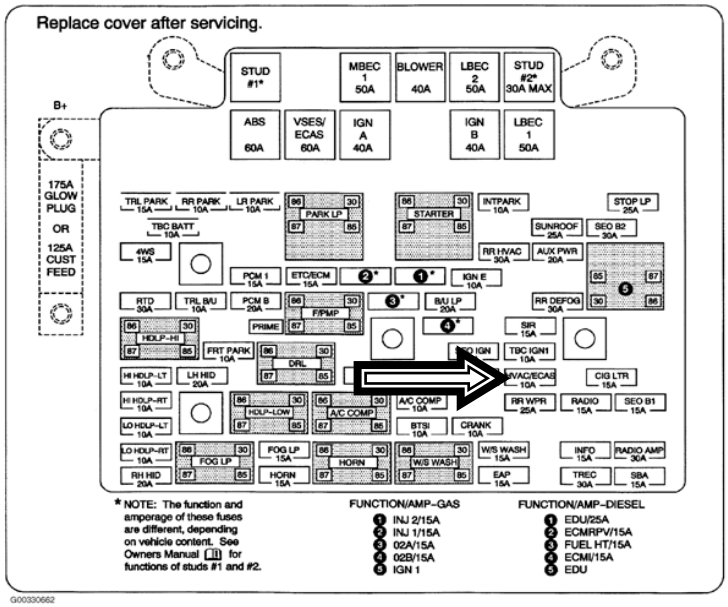 |





Mount the electronic control unit on top of the junction/fuse box. Be sure to clean the mounting surface with alcohol before applying Velcro.

Connect the wiring harness to the electronic control unit.

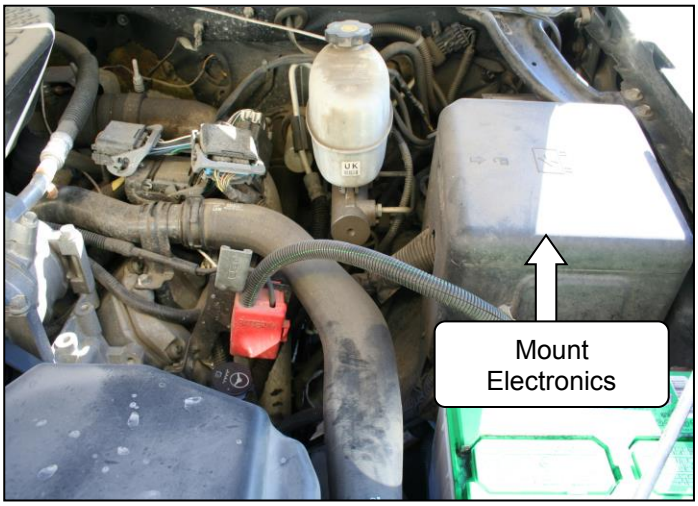


30. Double check all wiring connections and ensure wires are routed away from any heat sources and moving parts. And continue to the Setup, Testing and Verification with Over Speed Electronics section in this manual.

## *INSTALLATION without OVER SPEED ELECTRONICS (1036712-M)*

**VEHCILE SHOULD BE SAFELY SECURED BEFORE INSTALLATION.**

1. Block the wheels of the vehicle to prevent the vehicle from rolling.

   Open the hood.

2. You will need to remove the driver's side Charge Air Cooler (CAC) tube.

   Remove the driver's side upper silicone boot at the Charge Air cooler tube connection/turbocharger connection.

   Then remove the lower boot to tube connection.

   It is highly suggest that you remove the driver's side front inner fender liner. It will allow you easier access to the tube and the connections.

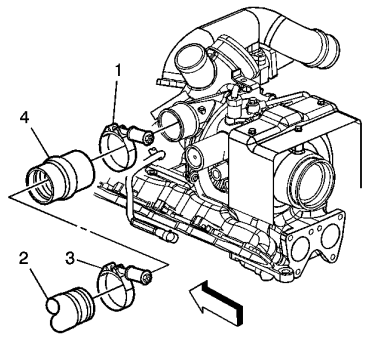


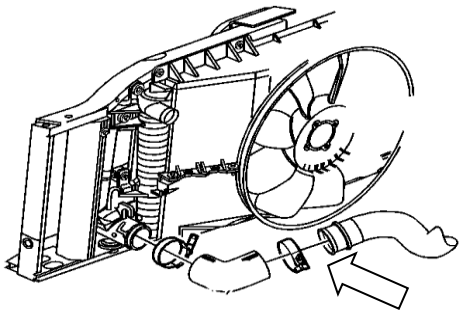

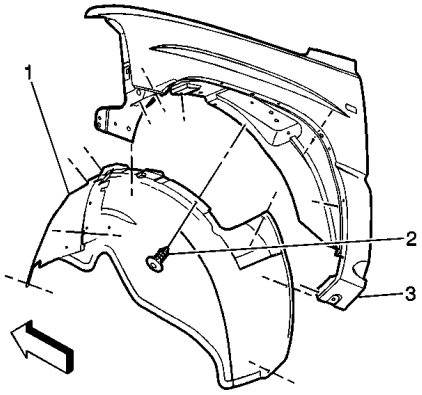

3. With the driver's side CAC tube removed, lay it flat on a work bench.

   First identify the turbo inlet and the CAC outlet side of the tube.

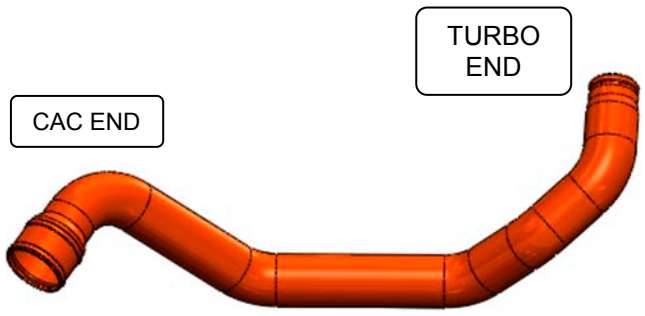


4. You will need to make two cuts to this tube. The first cut is relatively easy.

   Locate the two bends in question, (see graphic to the side). Once the bends have been located, move inwards towards the straight section 1.5". This is your cut line. Use a hack saw, sawzall or angle cutter to cut at the correct location.

   Be sure to cut perpendicular or square to outside of the pipe. DO NOT CUT AT AN ANGLE.

   The section you remove should be approximately 5" long.

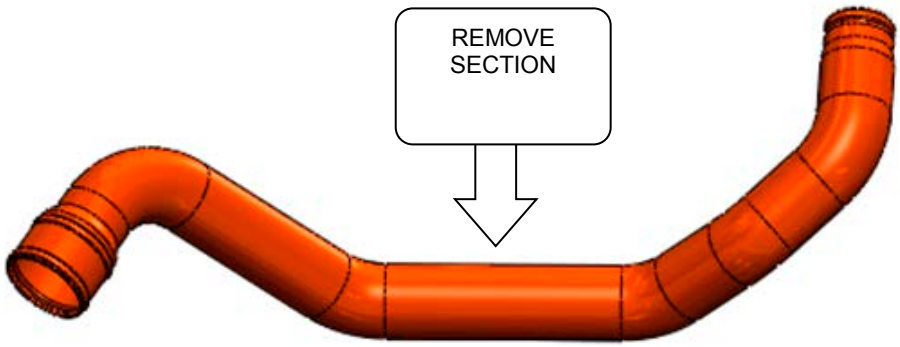


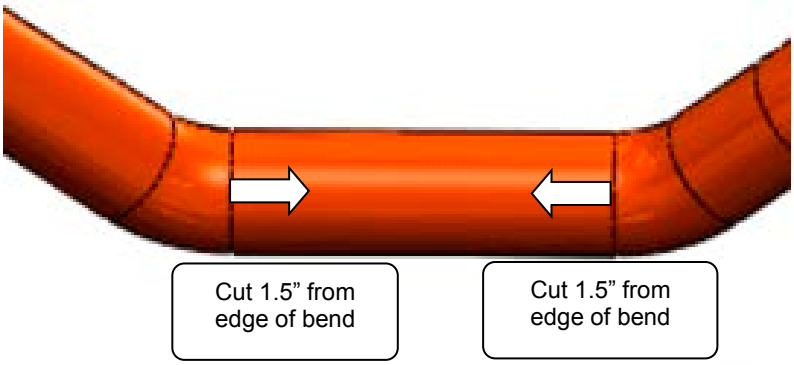


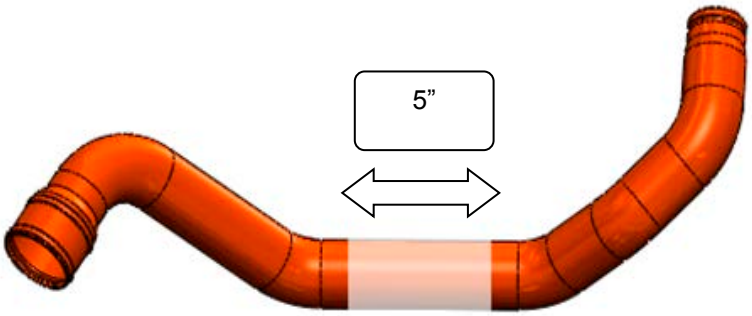

5. With the pipe cut, you will now need to drill a couple of holes to secure the boot bead on both ends of the pipe.

6. Firstly, remove the backing from drill Jig sticker and wrap around pipe. The edge of the sticker should line up with the edge of the pipe.

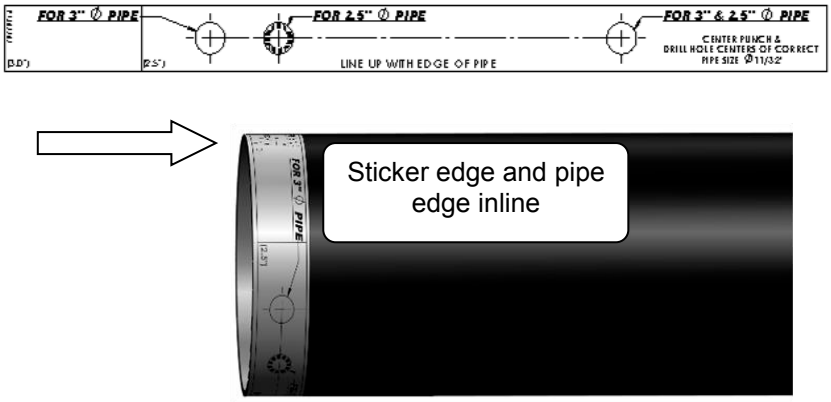


**YOU WILL USED THE 2.5" TEMPLATE MARKS**

7. For the 2.5" pipe the sticker should wrap perfectly around the pipe, the start of the sticker should meet the end of the sticker.

   With the sticker in place use a center punch and then use a **Ø1/8"** drill bit and drill a hole in the center of the holes marked **"For 2.5"Ø".**

   There will be two holes and they should be perfectly 180° inline with each other through the pipe.

   **DO NOT DRILL COMPLETELY THROUGH THE PIPE AND OUT THE OTHER END. YOU WILL NEED TO DRILL ONE SIDE THEN ROTATE, AND THEN DRILL THE OTHER SIDE.**

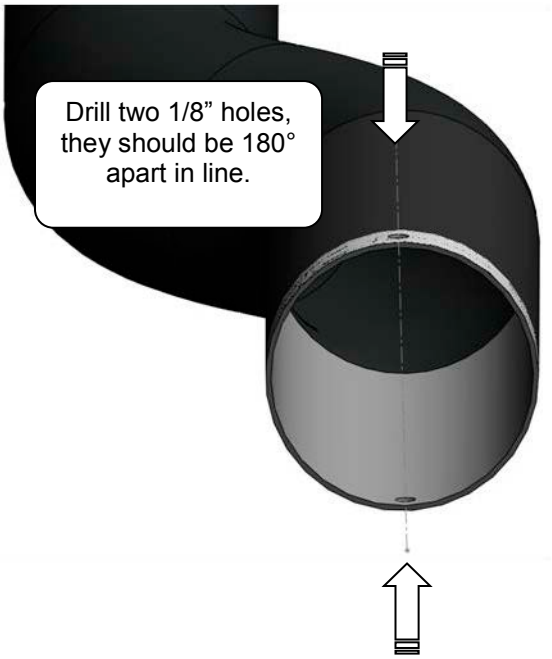

8. Once the pilot holes are drilled you will need to drill an **Ø11/32"** hole through the pilot holes.

   You can now remove the sticker.

   **You must deburr the inside of the drilled holes.**

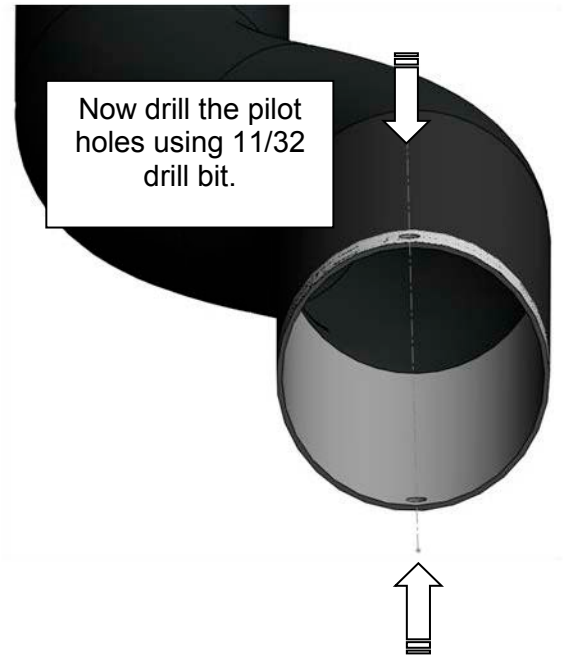


9. Once the holes are drilled, install the ring bead around the pipe. Lock each end of the ring bead into each hole.

   You can use needle nose pliers to tweak or adjust the ring fit slightly.

   Be careful not to bend the ring bead to much as you will weaken it.

   Note the ring bead does not have to be perfectly tight or snug around the pipe, as we will be installing a silicone boot over top of it.

   With the ring bead in place, you should not be able to pull the ring bead off axially from the tube.

| | |
|---|---|
| 10. With the holes and bead rings installed in both pipes you can now install the silicone boots and then the positive air shutoff valve. | 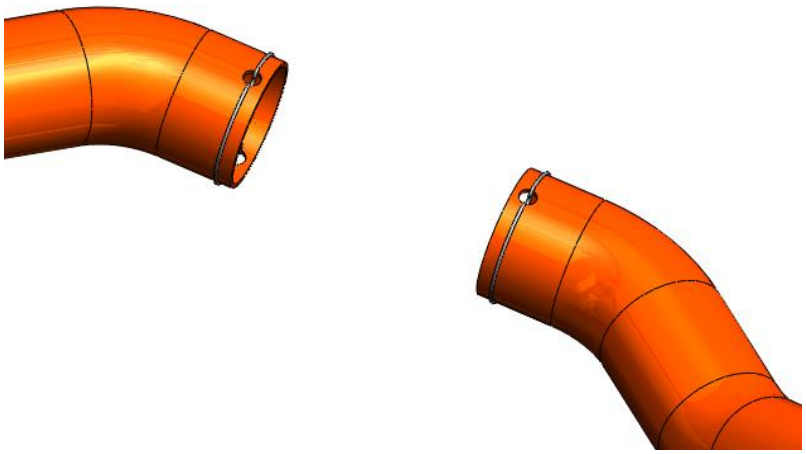 |
| 11. Install the two 2 ½ - 3 ¼ step boots (#1302272) over each CAC tube and their respective boot beads. | 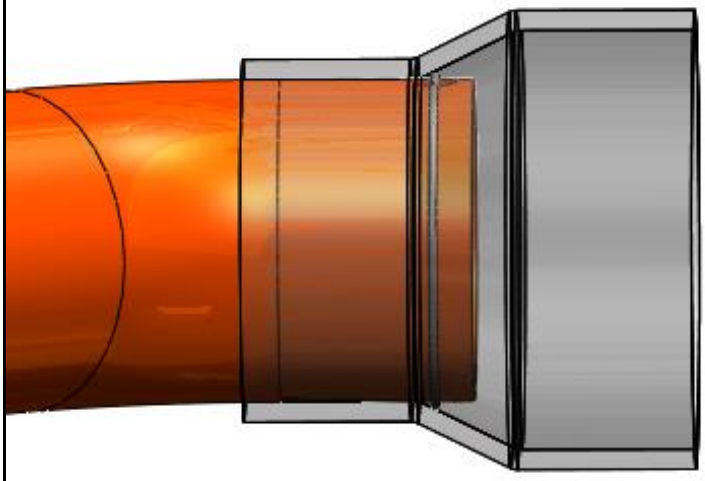 |
| 12. Once you have installed both silicone boots over each of the CAC tubes. You can now install the PAS valve. Please note the flow orientation arrow on the side of the casting. This is the direction of air flow. | 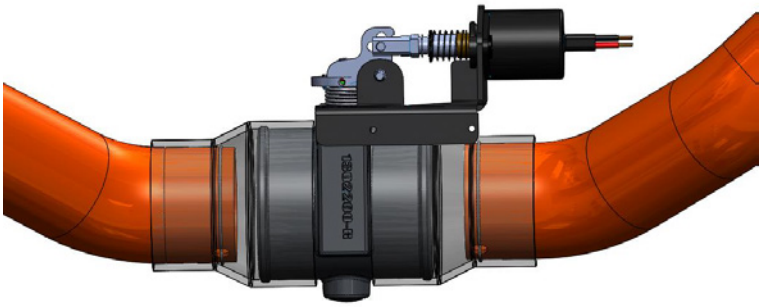 |

**Please note the flow orientation.**

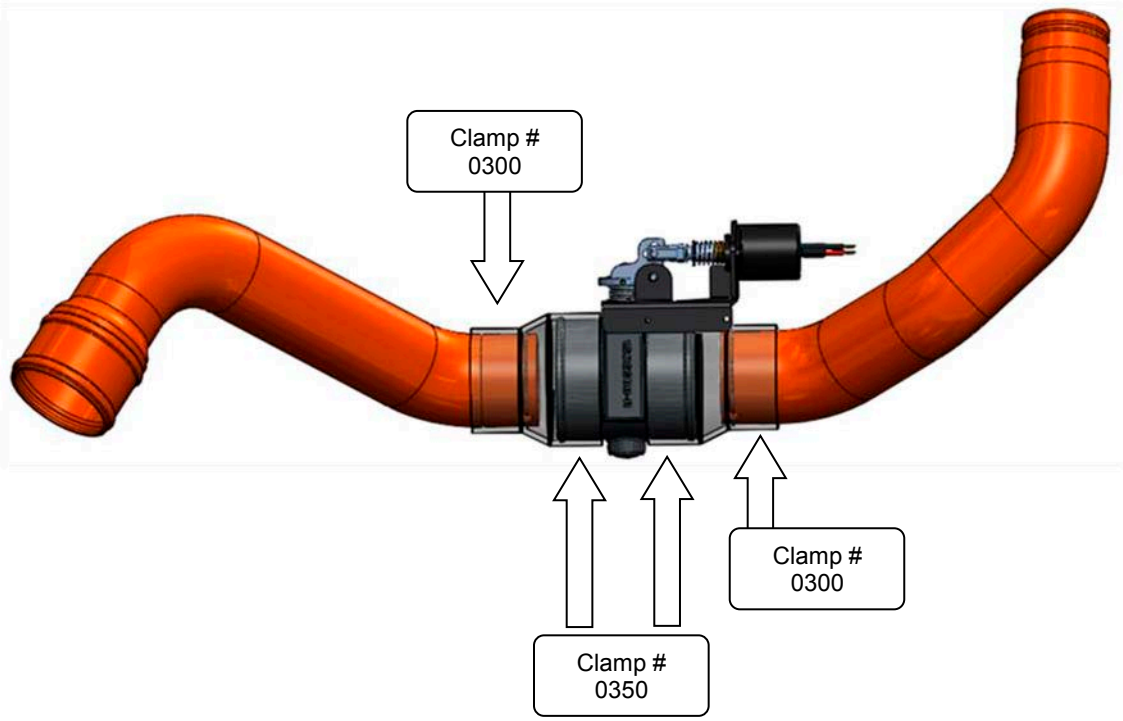


13. Install all clamps loosely until proper in vehicle fitment can be determined.

14. Install PAS tube assembly into the vehicle.

    Install the lower CAC side first, and then install the turbo connection last.

    Note that you will need to rotate the tubes you achieve perfect alignment. Once you are happy with fit and the PAS unit will not contact any other components or vibrations.

    Tighten all spring clamps until the spring is spring bound.

***BE SURE TO ORIENT THE PAS VALVE SO THE LINKAGE IS EASILY RESETTABLE***

| | |
|---|---|
| 15. Reinstall wheel well/fender liner. | 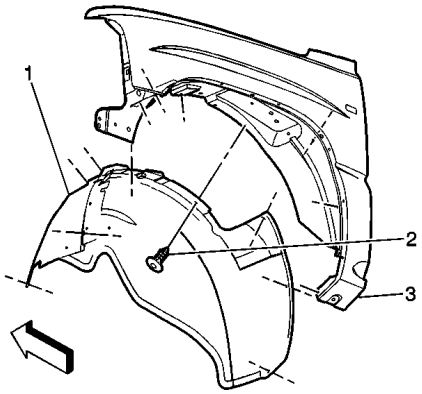 |
| 16. Lay out supplied wiring harness over top of the engine.<br><br>Locate and connect the weather pack connector on the wiring harness to the solenoid on the PAS valve. See page 34 for more info. | 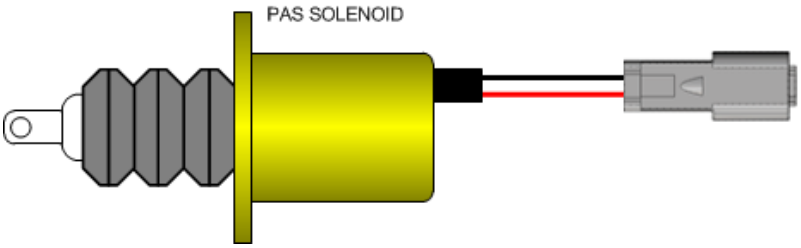 |

17. You will then need to route the switch wires through the firewall on the driver's side.

    Choose a highly visible location for the switch and mount it to the dash.

    NOTE: You may need to trim the switch wires to length once you have located where the switch is to be mounted.

    **Using a 1/8" drill, drill a pilot hole in the location you have selected for the switch to be mounted.**

**Finally using a ½" UNIBIT drill bit, drill an exact ½" round hole.**

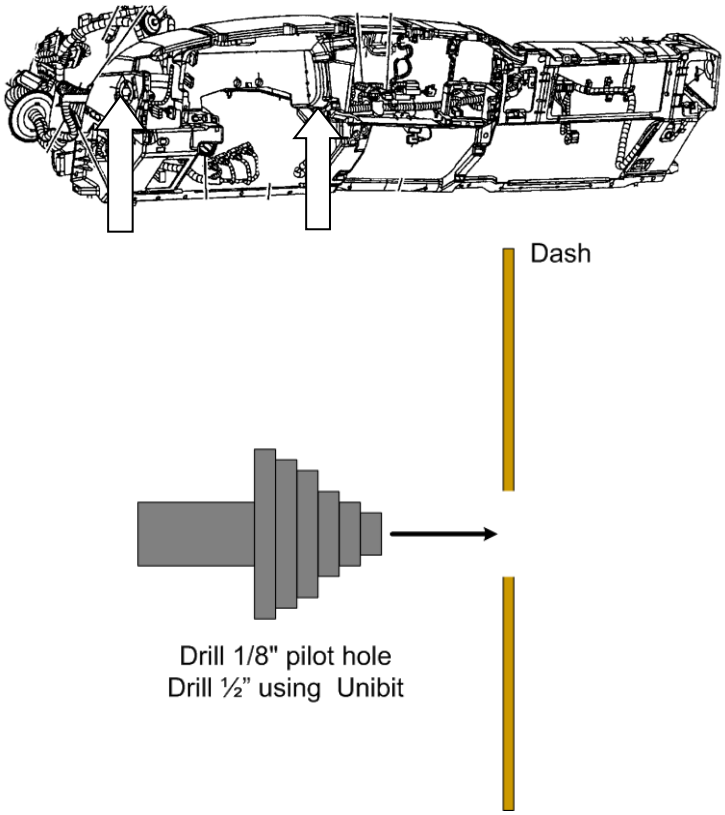


18. Once you have the mounting hole drilled, crimp the switch connectors to the switch wires and install the correct switch wires to the correct switch terminals, then insert the switch into the dash from the backside.

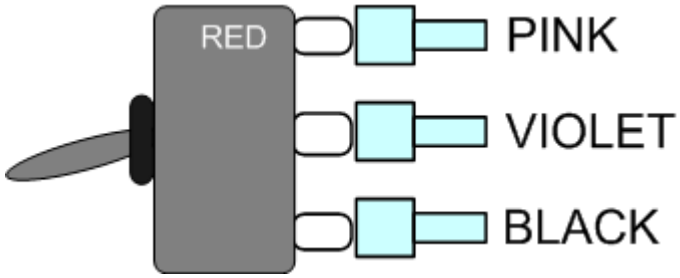

19. Mount the switch so that the groove on the thread boss is facing down.

    Adjust the HEX washer/nut so that the switch threads do not protrude an unsightly amount.

**Switch install with decal**

Apply the supplied decal to the dash and tighten the round plastic nut.

**Switch install with Guard**

Install the switch guard onto the switch by aligning the tab with the groove on the thread boss.

Then tighten on the round plastic nut and apply the decal to the switch guard.

## Switch install with Decal

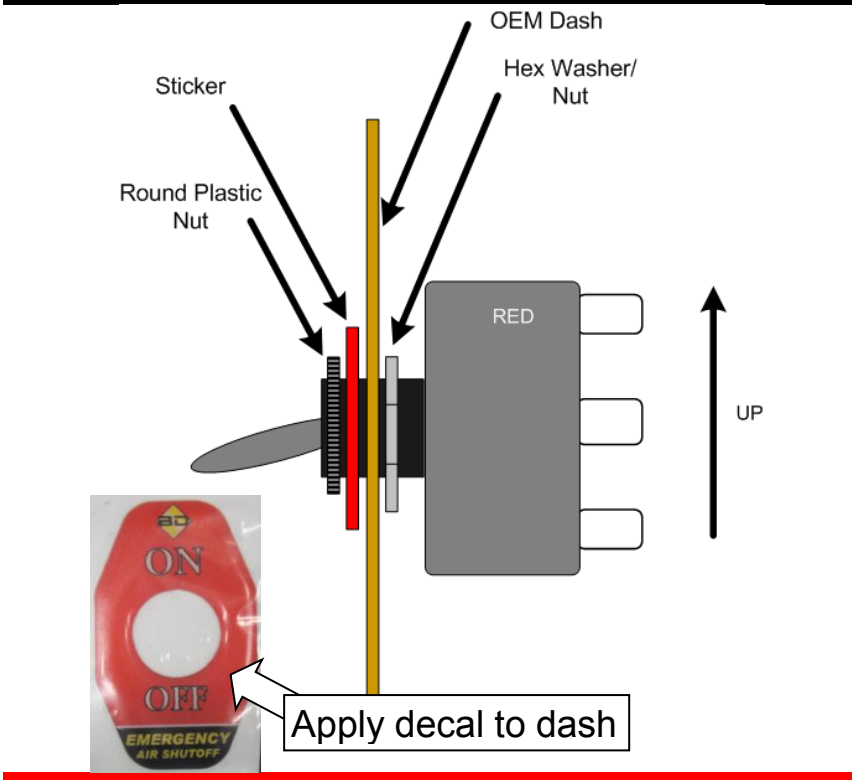


## Switch Install with Guard

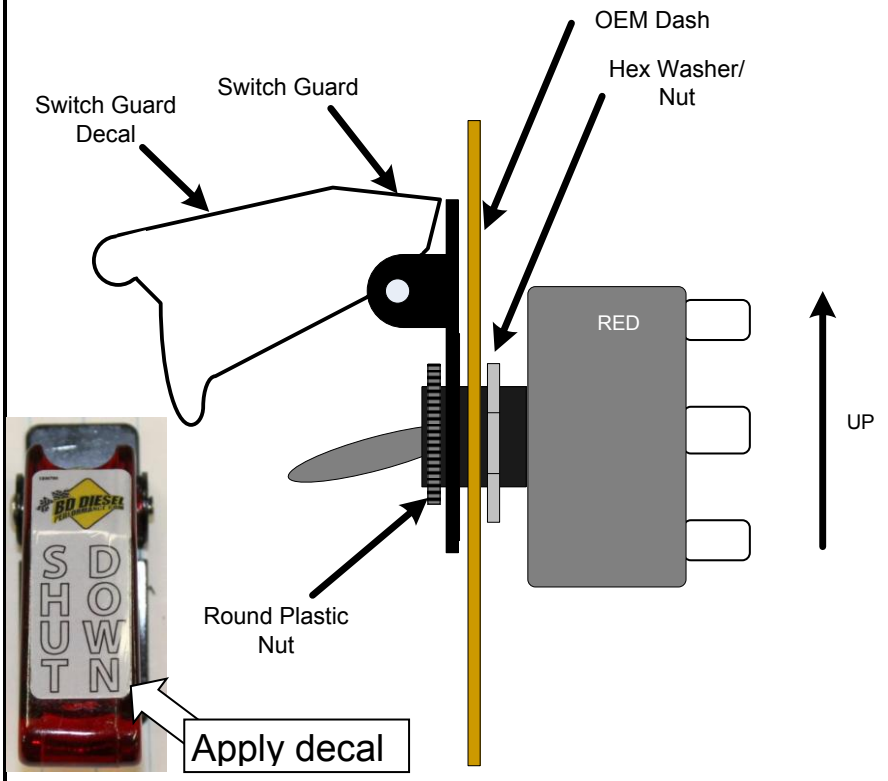

| | |
|---|---|
| 20. Next locate the auxiliary power connection on the driver's side of the motor then trim and crimp the ring terminals and connect to the respective power and ground connections. | 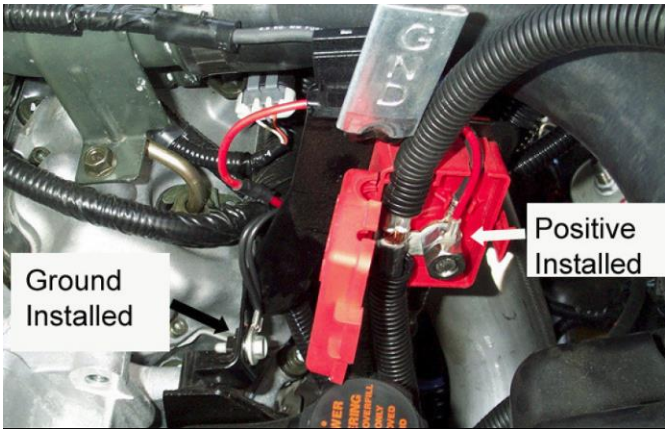  |

21. For the last connection you will need to locate ignition power.

    Locate the battery junction box at the driver's side rear of the engine compartment.

    You will need to remove the vacuum pump that is mounted to the top of the junction box.

    Open the junction box and locate the correct ignition powered fuse.

    Locate appropriate fused ignition power circuit (see table below). Install fuse tapper on to fuse, reinstall fuse. Trim the pink wire to length and crimp the flag connector to the wire and connect the pink wire lead wire with flag connector to this new connection.

    Route wire out of the box and close lid and kick panel. Re-attached vacuum pump.

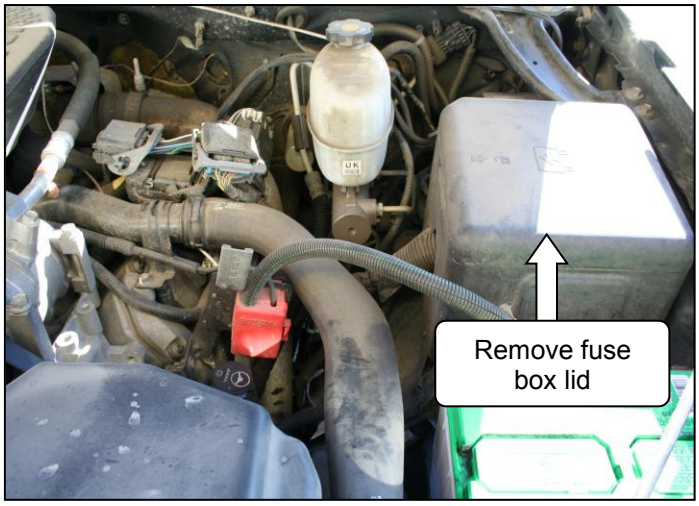


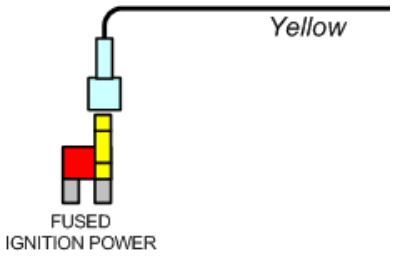

| 2008-2009 Vehicles (LMM) | 2004.5-2007 Vehicles (LLY, LBZ) |
|---|---|
| HVAC #52 (10AMP) | HVAC (10AMP) |
| 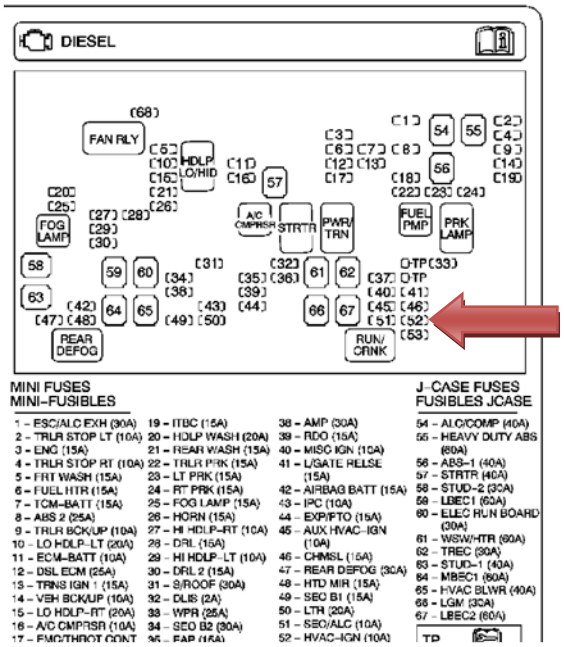 | 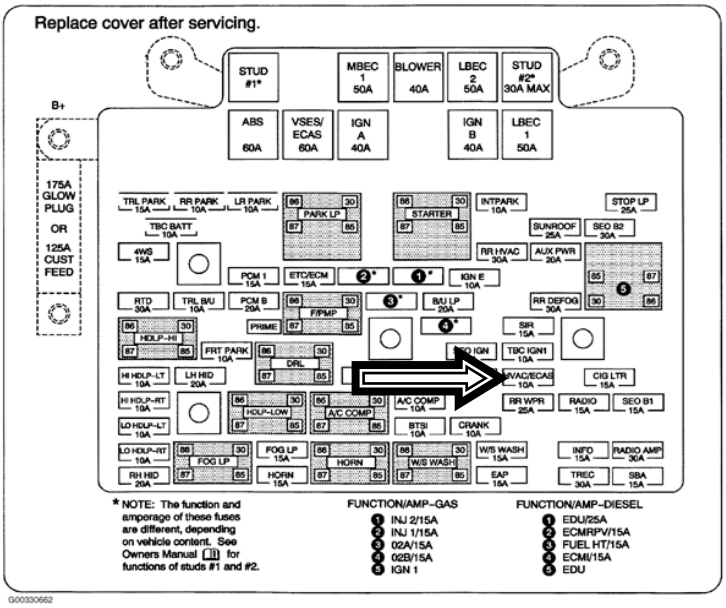 |

22. Double check all wiring connections and ensure wires are routed away from any heat sources and moving parts. Then install the loom with the supplied tee connector and clips for the loom ends and continue to the testing flow chart without over speed electronics in this manual.

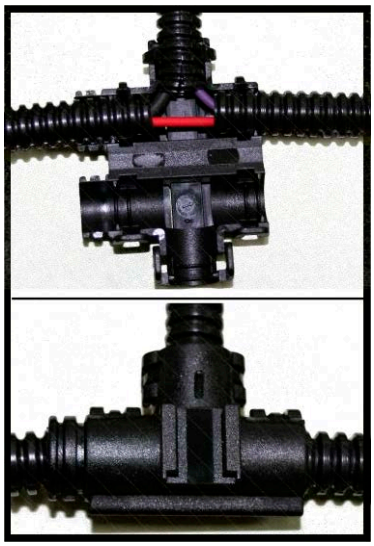

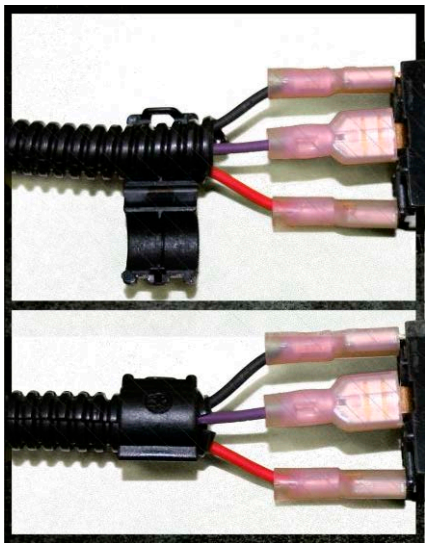

# WIRING DIAGRAM with OVER SPEED ELECTRONICS (1036712)

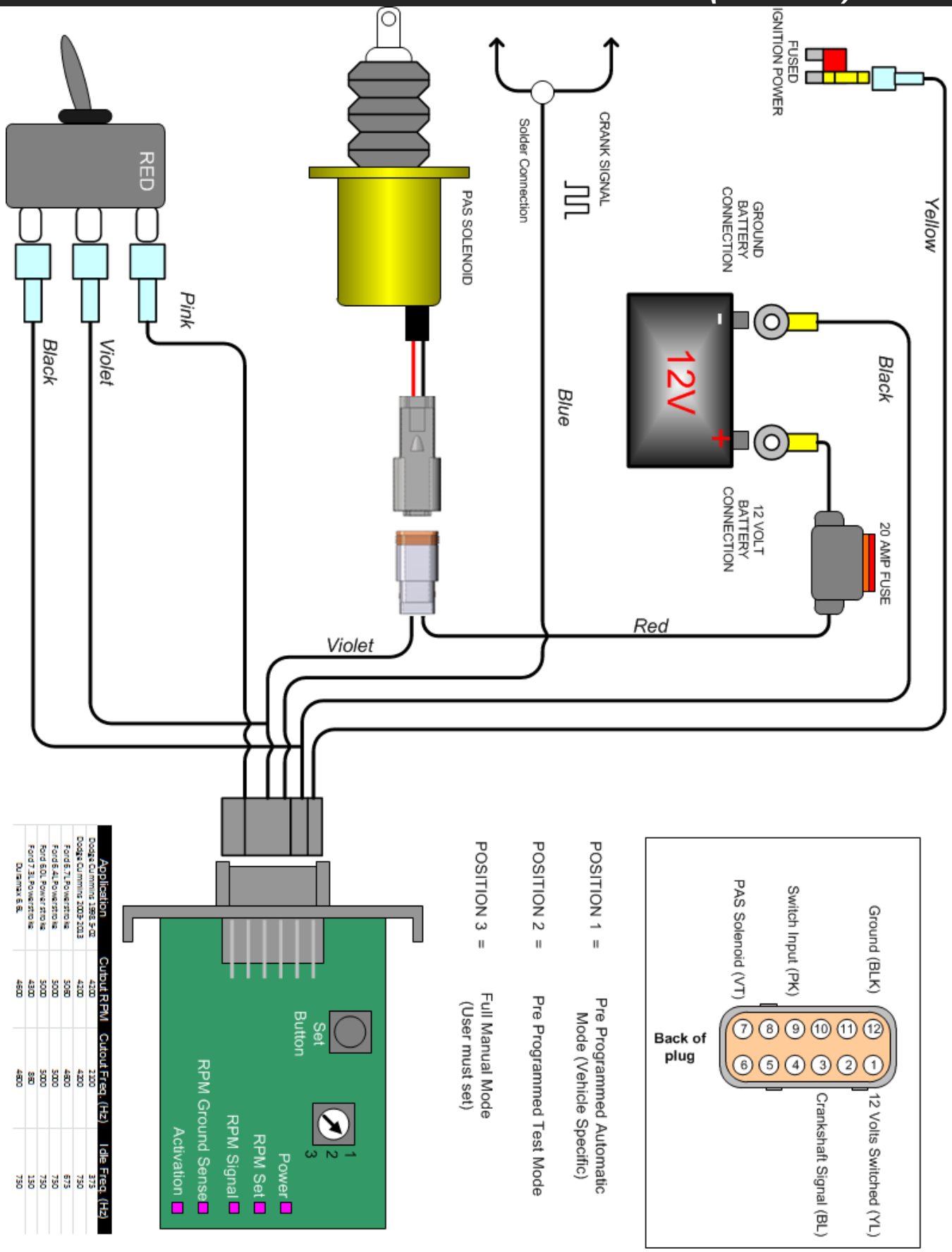

## *WIRING DIAGRAM without OVER SPEED ELECTRONICS (1036712-M)*

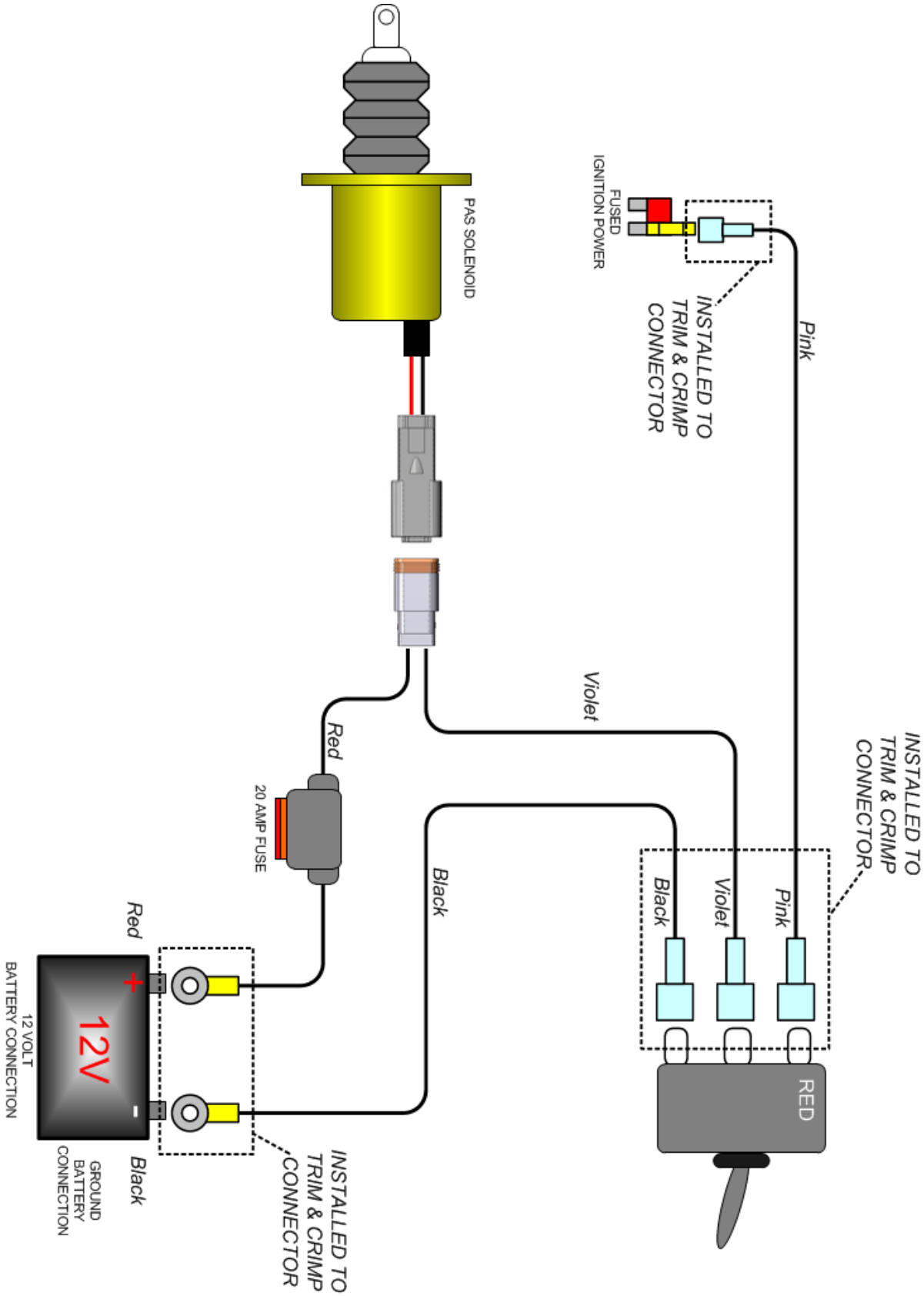

# BEAD RING AND DRILL JIG INSTALLATION

- WRAP CORRECT STICKER AROUND PIPE. LINE UP STICKED GE WITH EDGE OF PIPE. MAKE SURE STICKER IS SQUARE AROUND PIPE AND BOTH ENDS CONNECT
- CENTER PUNCH CENTER OF MARKED HOLES
- USE CORRECT SIZE DRILL BIT AND DRILL THROUGH PIPE. ROTATE PIPE AND DRILL THROUGH SECOND MARKED HOLE. THE HOLES SHOULD BE PERFECTLY STRAIGHT
- REMOVE STICKER AND DEBURR INSIDE AND OUTSIDE OF PIPE
- THEN WRAP WIRE BEAD AROUND TUBE. YOU MAY NEED TO FORM IT SLIGHTLY. IF DONE CORRECTLY THE BEAD WILL NOT PULL OFF OF TUBE
- INSTALL SILICONE BOOT AND CLAMP AS YOU WOULD NORMALLY

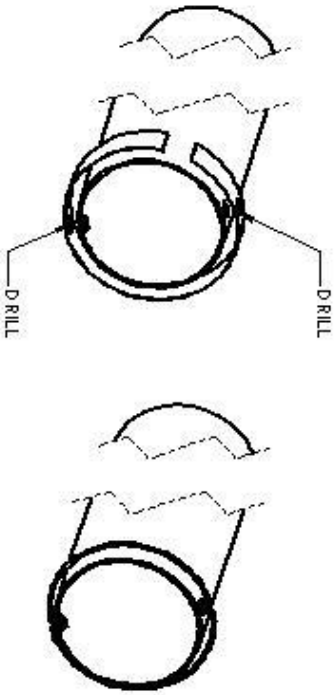


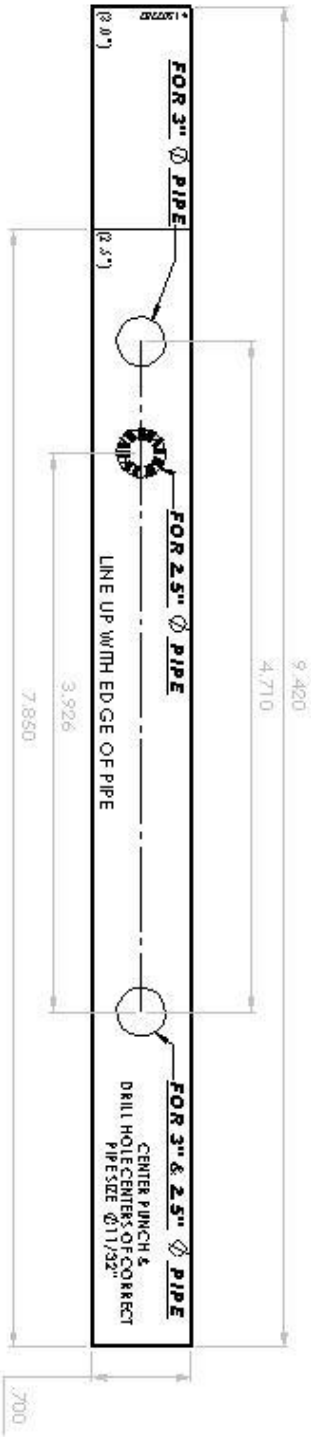

## *RESETTING THE VALVE*

**Valve Activated (Closed)**

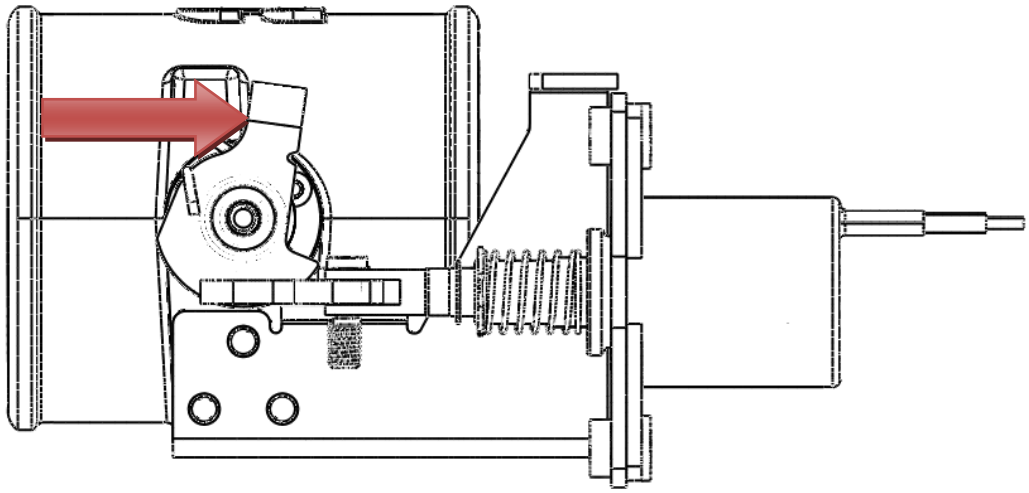

**Valve Reset (Open)**

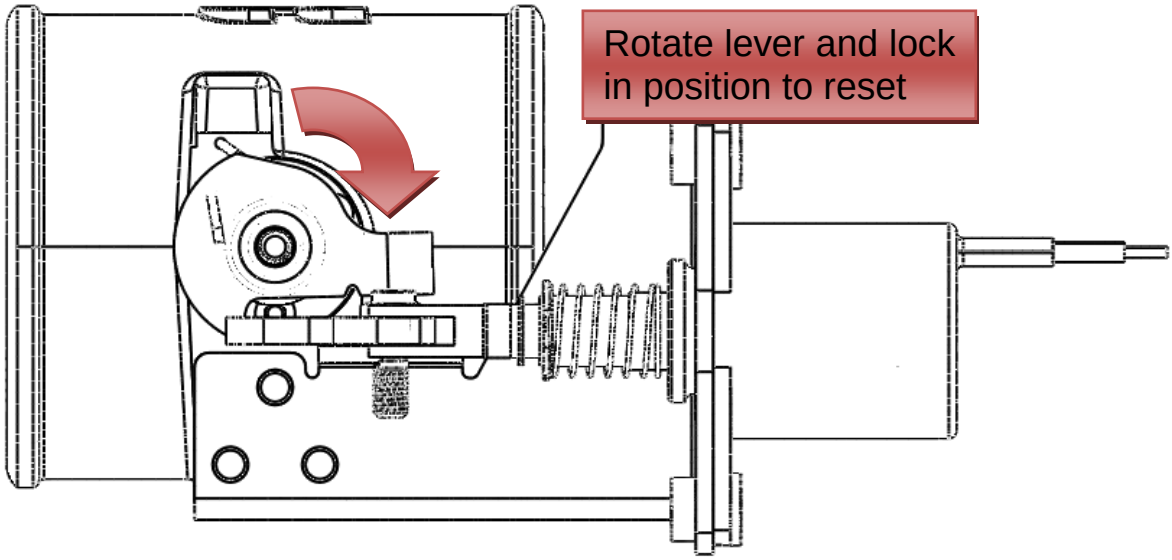

## *SETUP, TESTING AND VERIFICATION with OVER SPEED ELECTRONICS*

| | Engine Idle Speed Frequency 2001-2010 |
|---|---|
| Each unit is specifically configured for each model of truck. As in the case of different model years and makes the engine RPM frequency is different. | 600-800 Hz (1:1) ratio |

| 2004 ½ -2010 Duramax (LLY,LBZ,LMM) | Activation RPM | Activation Freq. (Hz) |
|---|---|---|
| PAS Switch Position #1 (Automatic Mode) | 4600 | 4600 |
| PAS Switch Position #2 (Test Mode) | 1200 | 1200 |
| PAS Switch Position #3 (Manual Mode) | User Configured | User Configured |

| ***Automatic Mode (Pre Configured RPM)*** | |
|---|---|
| Action | Failure/Fix/Notes |
| 1. Turn the ignition key to the on position. You should see the RED light illuminate on the toggle switch. | If the LED does not illuminate, check the wiring to the back of the switch first. Then check entire circuit. |
| 2. Next, start the engine.<br><br>3. With the engine idling, activate the toggle switch.<br>You should hear the solenoid activate and the valve close.<br>The engine should die.<br>Once the engine dies the switch should flicker ON and OFF indicating a trip condition. | If the engine does not die, check to make sure the valve actuated.<br>If the valve did not actuate check switch and ground wiring.<br>If valve did actuate but the engine is still running, ensure nothing has contacted the valve mechanism |
| 4. You can now reset the valve, by rotating the upper lever and engaging the solenoid stop. | |

| | |
|---|---|
| 5. With the valve reset, remove the outer enclosure from the control module. There are two locking tabs on the sides of the enclosure. 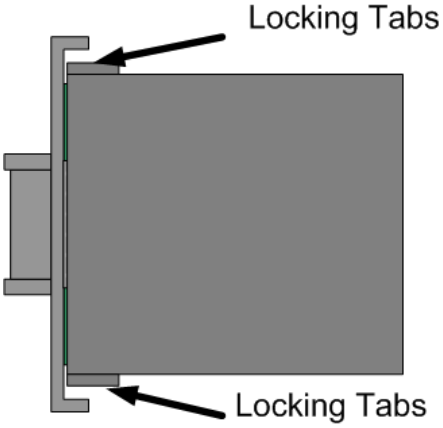  | |
| 6. Change the position selection switch to position #2 (Auto Test). Slide enclosure cover over circuit board. 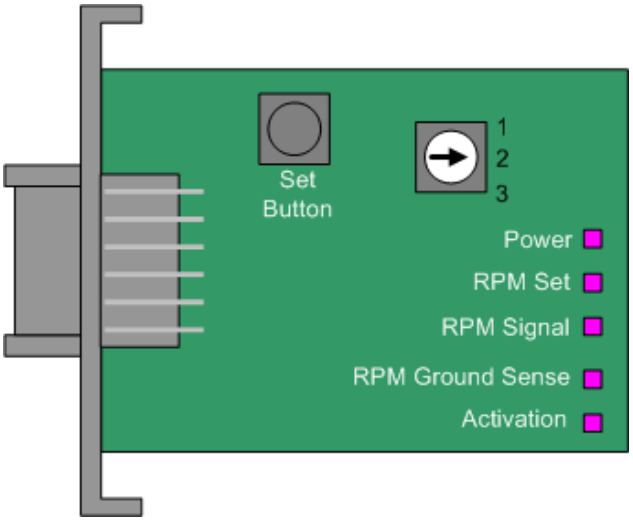  | |
| 7. Start the vehicle, with the vehicle in park step on the throttle increasing the engine RPM. At 1200RPM the PAS should engage itself automatically, and the engine should stall. Like with all activations the toggle switch should flash. | If the engine did not stall, check to make sure the valve actuated.<br>If the valve did not actuated, double check the engine RPM electrical connection.<br>Check the RPM Signal LED on the circuit board, it should flash proportionally to the engine RPM. |

| | |
|---|---|
| **8. Reset the valve and reset the mode position switch to position #1** | |
| You are now complete and the unit should function correctly. This test cycle should be completed once a year. | |

## *Manual Mode (User Configured RPM)*

| Setup | |
|---|---|
| With the control unit, the user/installer has the ability to set their own activation RPM. It is necessary that you chose a low activation RPM first to test that the units is operating correctly. Once it is, you will need to set the high limit RPM activation.<br><br>Note: When you press the Set button the module will add 25% to the set speed. | |
| 1. Open electronic enclosure, by releasing the two locking tabs on the side of the unit. | 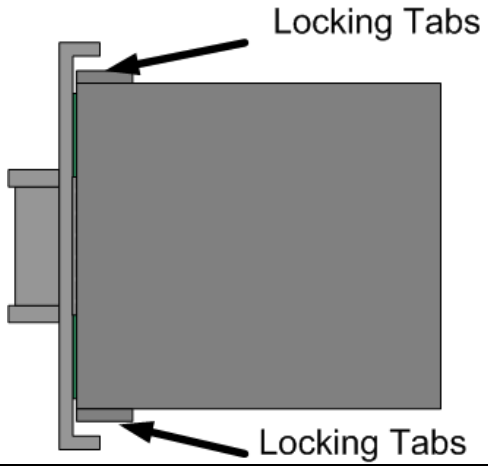 |
| 2. Adjust the position switch to position #3.<br> 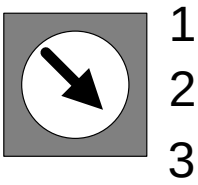 | 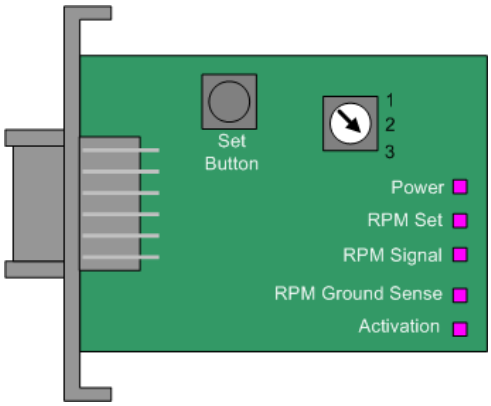 |

| | |
|---|---|
| 3. Start the engine.<br><br>4. Press and hold the RPM SET button.<br><br>When you push the SET RPM button will see the “RPM Set” LED illuminate.<br><br>5. With another person helping you, have them step on the accelerator with the vehicle in park. Raise the engine RPM to 1200 RPM.<br><br>6. Release the SET RPM button.<br><br>Upon releasing the button the unit will store the RPM + 25%. So for this example the unit has stored 1200RPM + 25% = 1500RPM. | 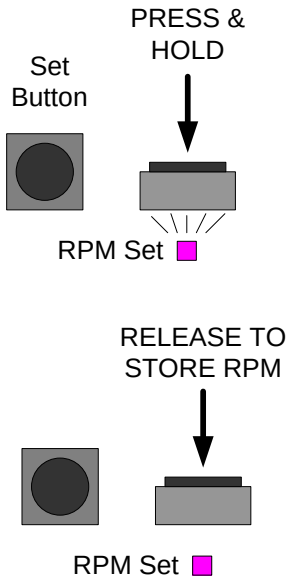 <br>You should see the RPM signal flash proportionally to engine RPM. |
| 7. Now increase the RPM of the engine to test the activation circuit is working correctly. As in this example the valve should activate at 1500RPM. | You should see the ACTIVATION LED flash ON/OFF on activation.<br><br>If the valve does not activate check the wiring.<br><br>If the valve activates but the engine does not stall, ensure nothing has contacted the valve linkage. |
| 8. With the valve activated the engine should die. Reset the valve and restart the engine. | |
| 9. Press and hold the RPM SET button.<br><br>When you push the SET RPM button will see the “RPM Set” LED illuminate.<br><br>10. With another person helping you, have | |

| | |
|---|---|
| them step on the accelerator with the vehicle in park. Raise the engine RPM to MAXIMUM engine RPM.<br><br>11. Release the SET RPM button.<br><br>Upon releasing the button the unit will store the RPM + 25%. So for this example the unit has stored MAXIMUM engine RPM + 25%. | 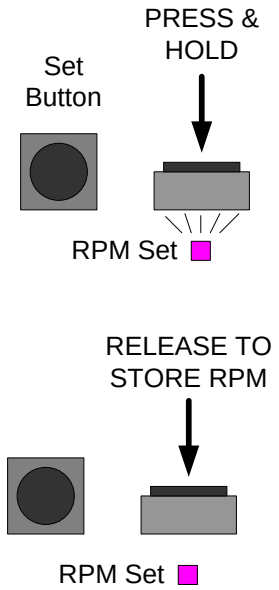 |
| 12. You can now put the electronic enclosure back together and secure it the fuse box. | |
| 13. With the engine running you will need to test to make sure the manual activation switch is functioning correctly.<br><br>14. With the engine running, lift the activation switch and the engine should die.<br><br>15. Reset the valve and you are now complete. | If valve does not activate check the wiring.<br><br>If the valve activates and the engine does not die ensure nothing has contacted the linkage. |
| You have now completed the installation, please be sure to complete the test once a year to make sure the unit is functioning correctly. | |

# TESTING FLOW CHART with OVER SPEED ELECTRONICS

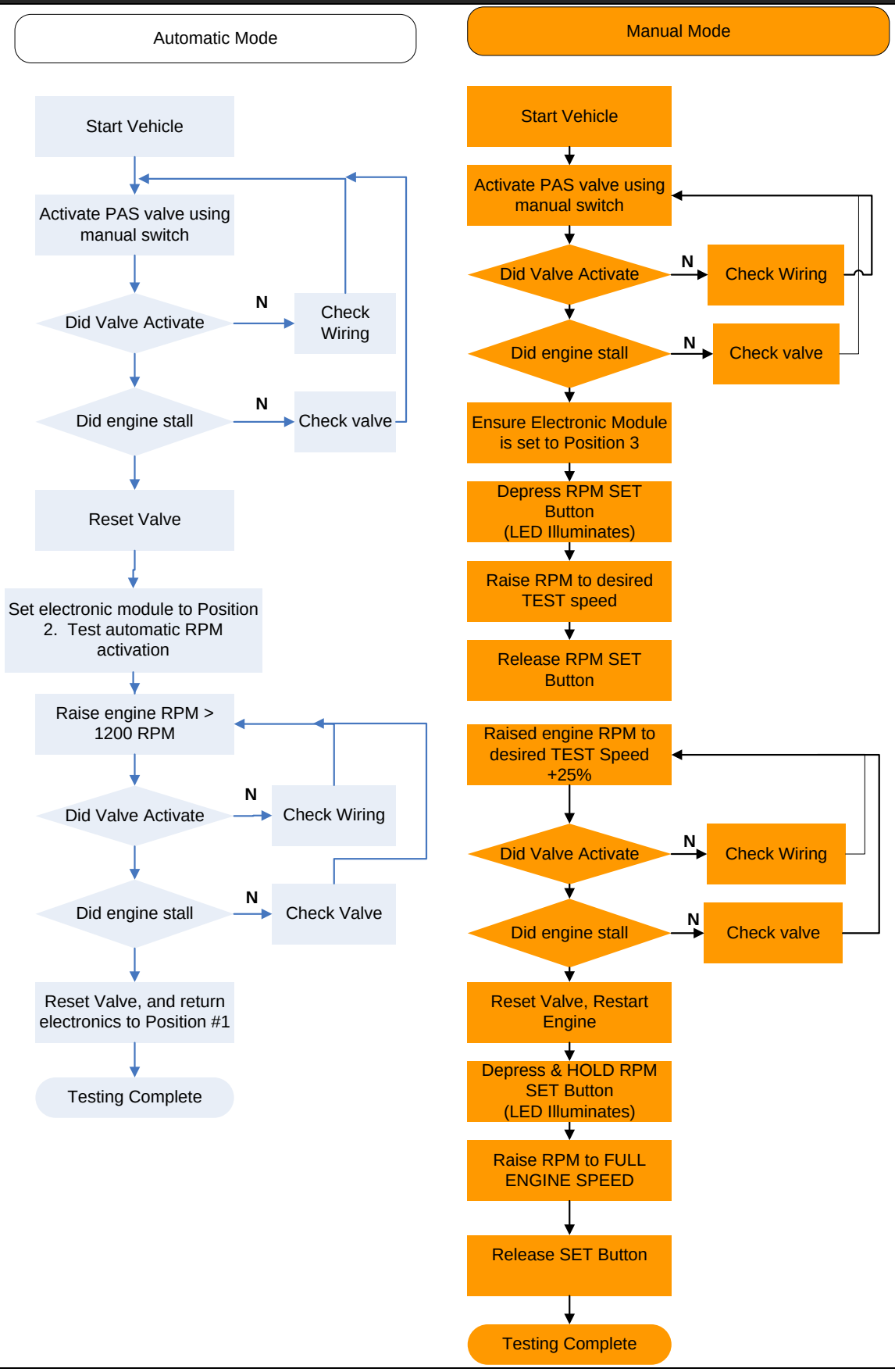

## *TESTING FLOW CHART without OVER SPEED ELECTRONICS*

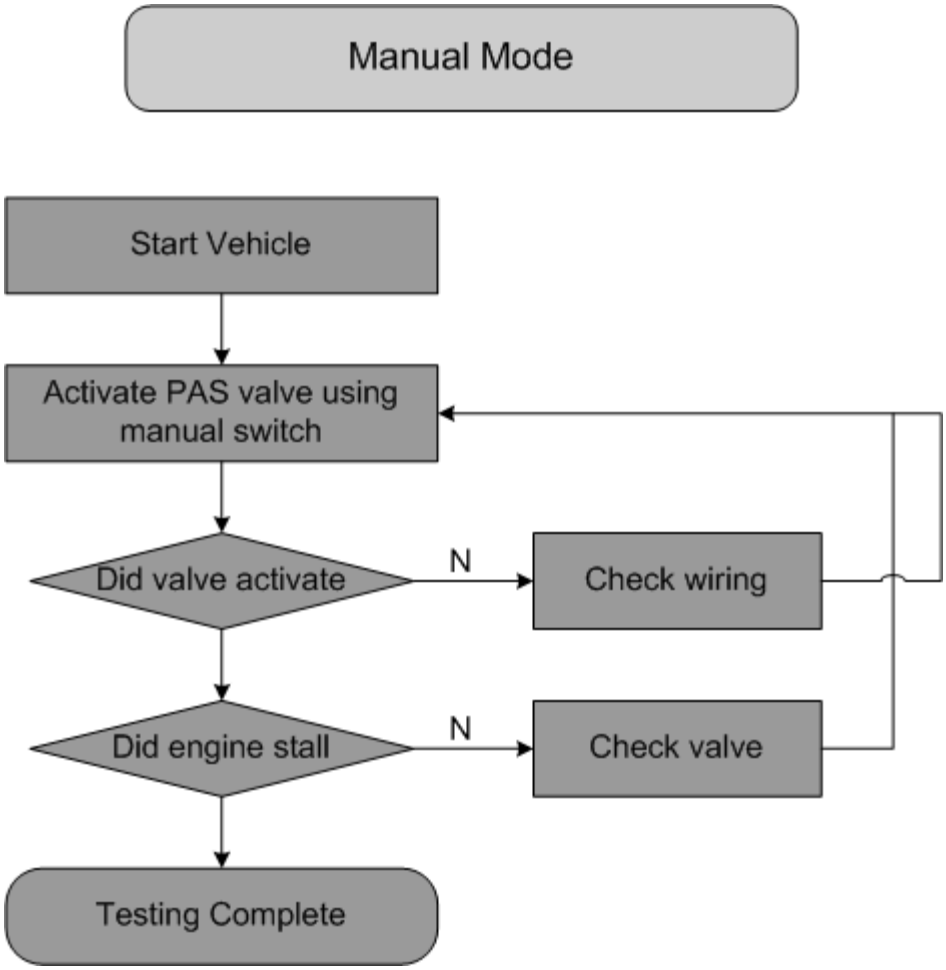

## *LED OPERATION*

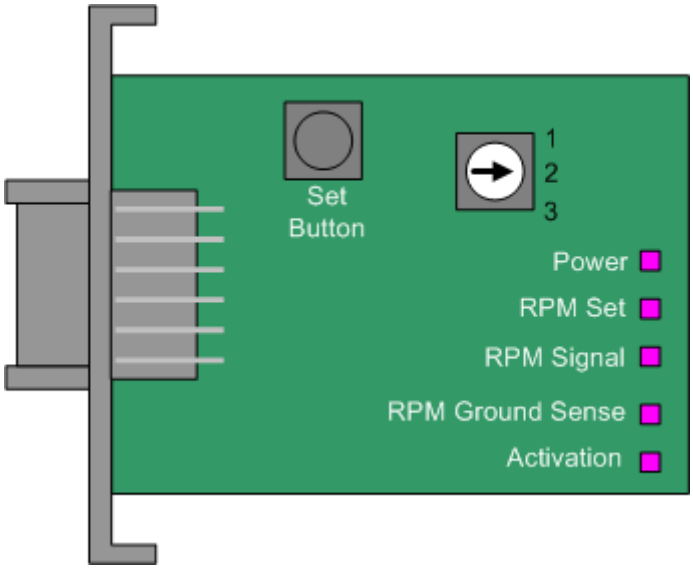


| LED | Description |
|---|---|
| POWER | Illuminates when unit is POWERED |
| RPM SET | Illuminates when SET Button is Pressed |
| RPM Signal | Flashes proportional to Engine RPM |
| Ground Sense | Illuminates when a GROUND signal is sensed on the activation line |
| Activation | Flashes when a valve activation is commanded manually (switch) or automatically |
| Toggle Switch LED | The LED will flash indicating either a problem with the system (Loss of RPM or Power) or an activated valve activation. |