D-D

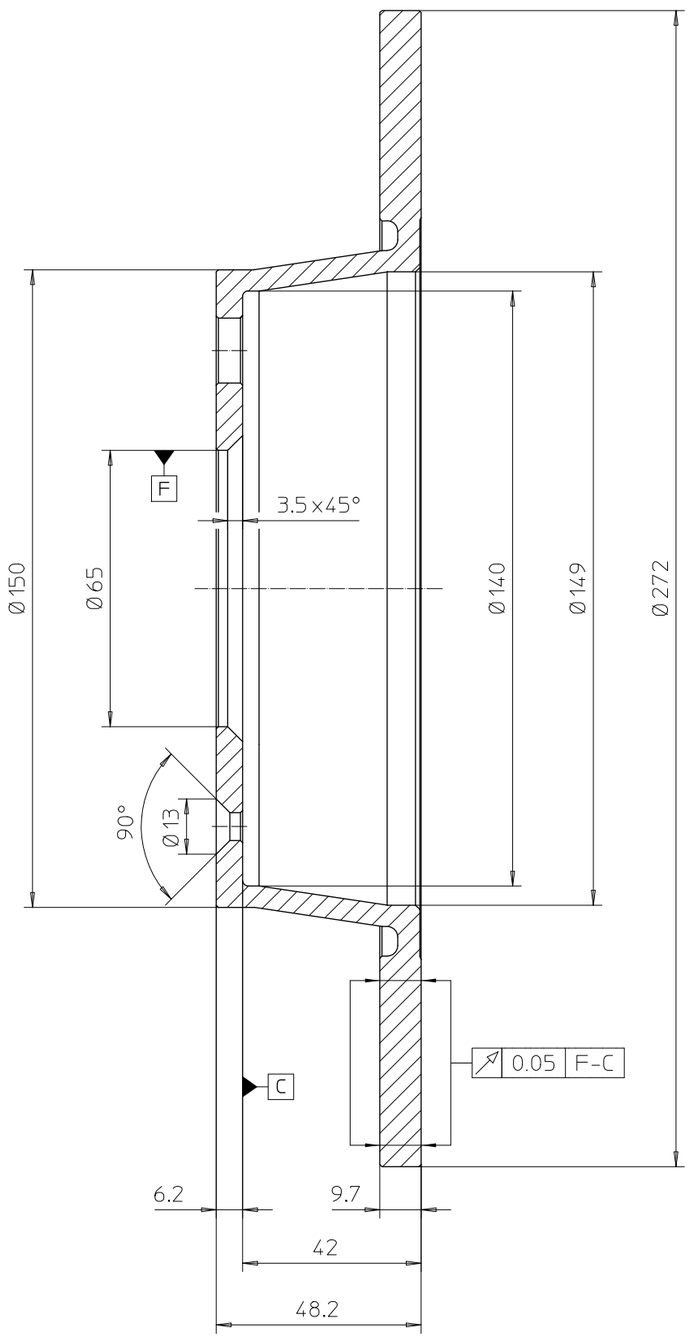

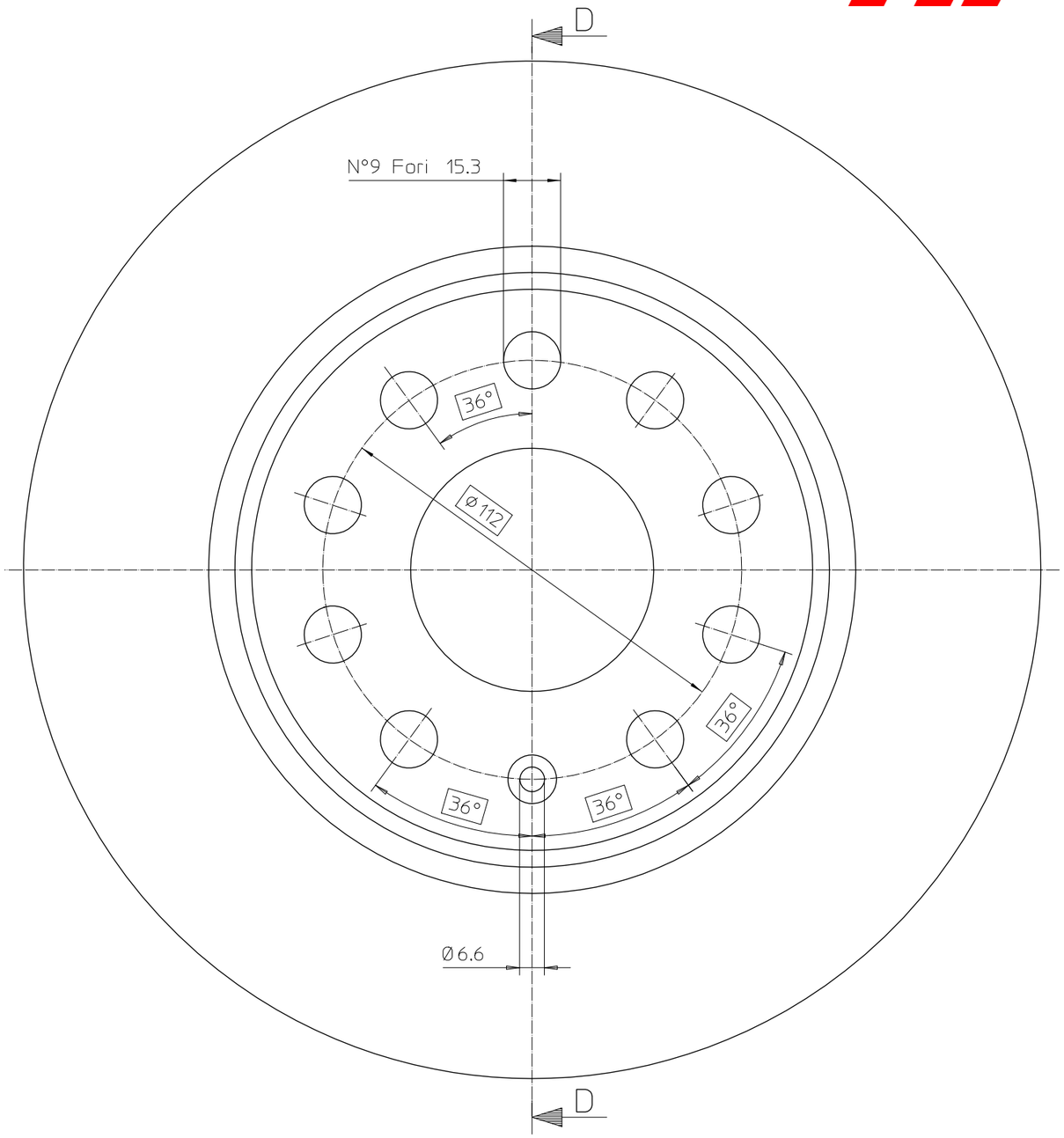

Learn more about brakes and rotors on our website.