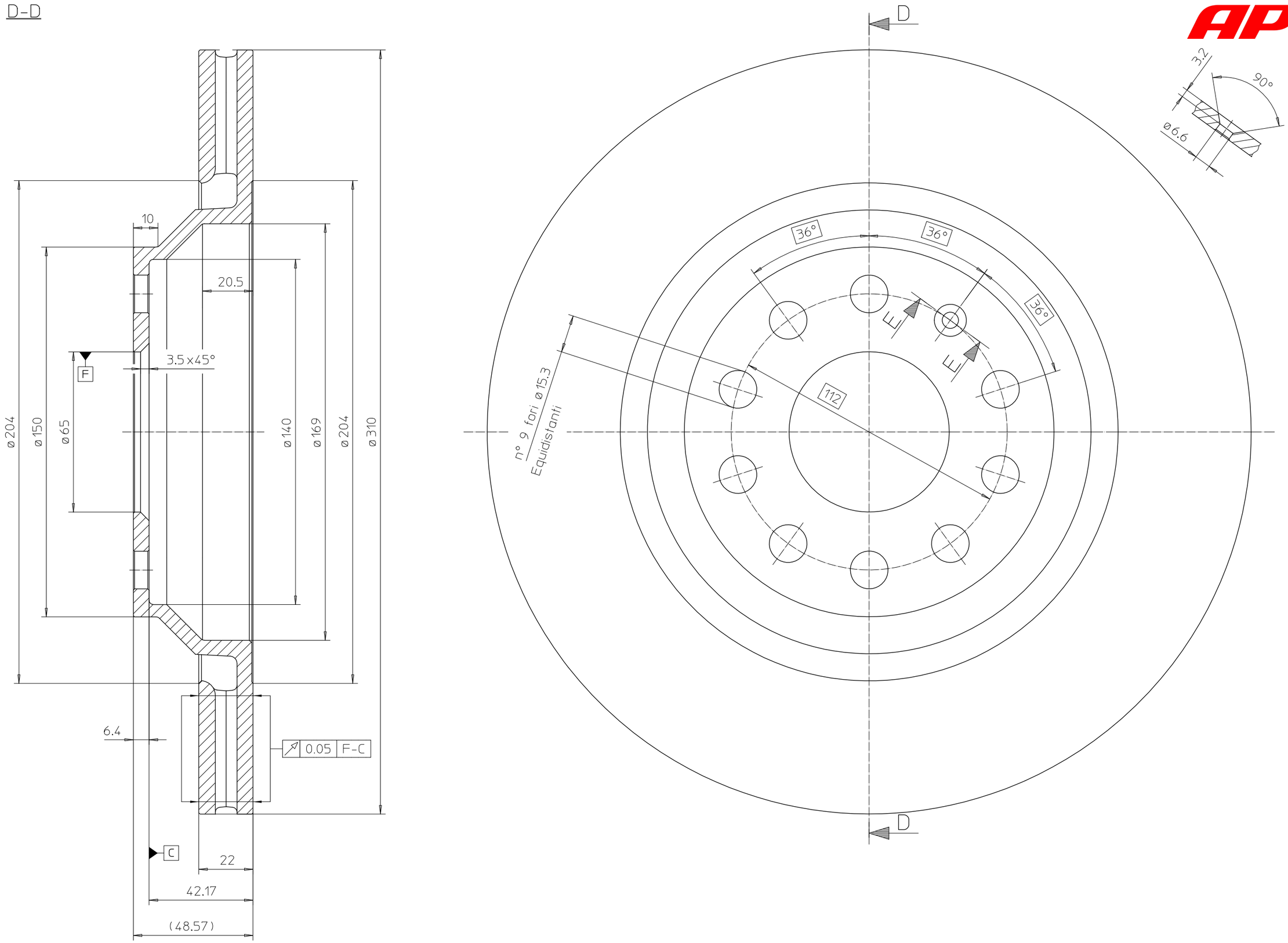

Learn more about brakes and rotors on our website.