ALL76186 /ALL76188

WIRING INSTRUCTIONS

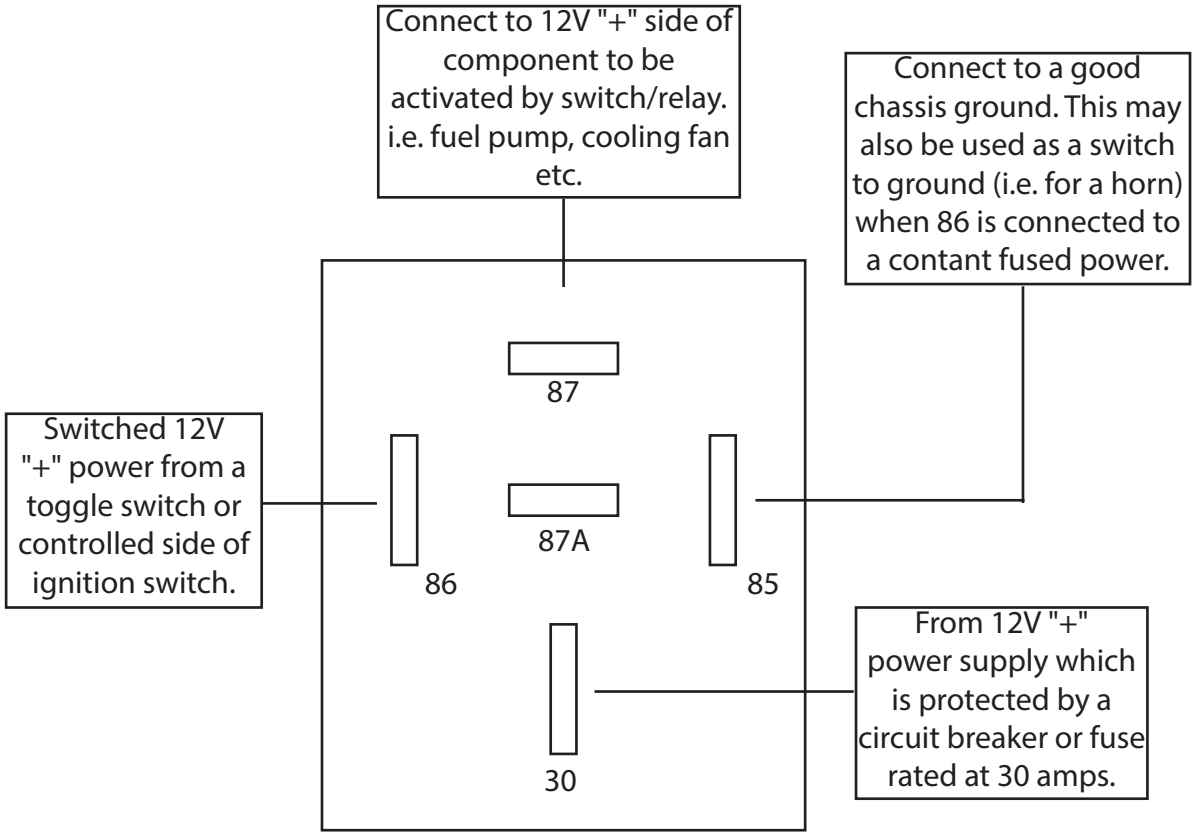

Learn more about automotive electrical parts we have.