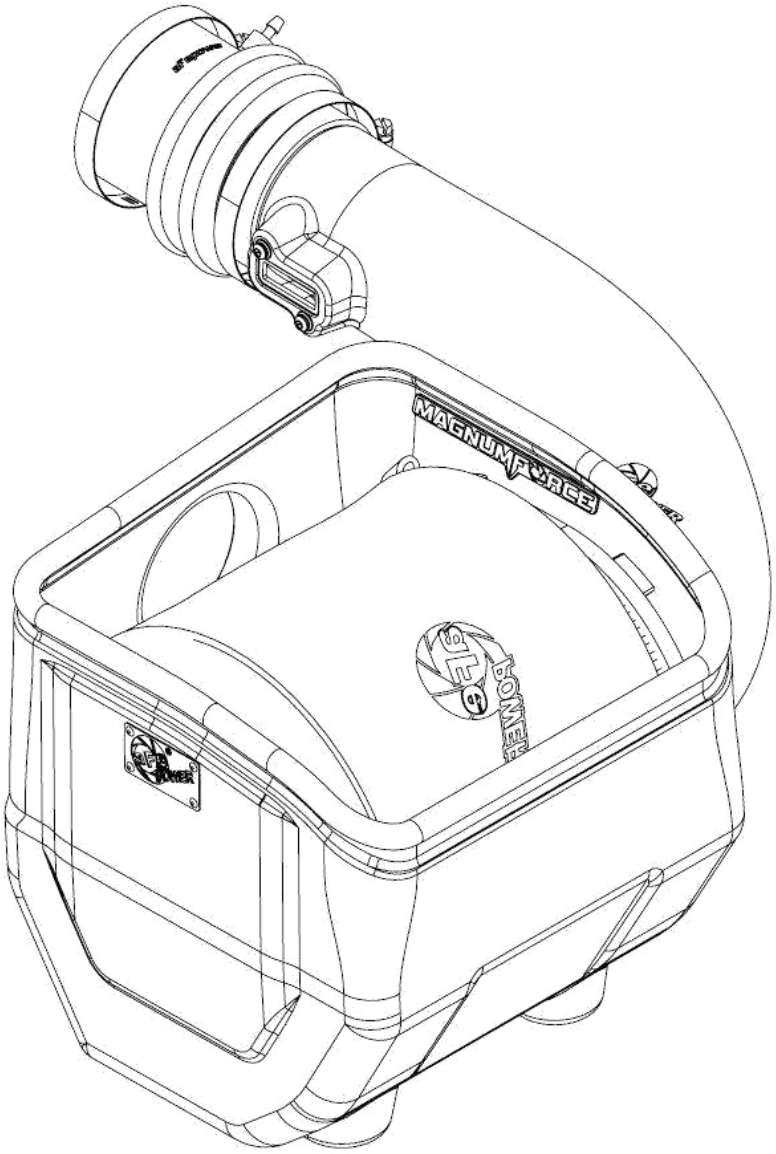

advanced FLOW engineering Magnum FORCE Stage-2 Cold Air Intake System

Instruction Manual P/N: 54-13013D-1 / 54-13013R-1

Make: **Nissan** Model: **Patrol Y-61** Year: **2017-2019** Engine: **I6 – 4.8L**



- **Please read the entire instruction manual before proceeding.**
- **Ensure all components listed are present.**
- **Ensure you have all necessary tools before proceeding.**
- **Do not attempt to work on your vehicle when the engine is hot.**
- **Disconnect the negative battery terminal before proceeding.**
- **Retain factory parts for future use.**

Label	Qty.	Description	Part Number
A1	1	Air Filter (Pro 5R)	24-91146
A2	1	Air Filter (Pro DRY S)	21-91146
B	1	Tube	05-13013B3
C	1	Housing	05-13012B3
D	1	Coupling, Silicone Bellow: 3-1/8”ID x 4-1/2”L	05-01404
E	1	Fitting, Tube Coupling 3/16”	03-50150
F	2	Clamp, 048 (2-9/16” – 3-1/2”)	03-50007
G	3	Grommet, Rubber	03-50050
H	1	Pre-Filter, Black	28-10033
I	1	Seal, Trim (29” Length)	05-00007
J	2	Screw, Torx: M4	03-50490
K	1	Hose, Vacuum 5/32” ID, Black (18” length)	05-00122
L	1	Torx Security Bit	03-50066

Installation will require the following tools:

Bit Driver, 8mm nut driver, 10mm nut driver, pliers, and a phillips head screw driver.

Emissions Disclaimer: This product is not currently CARB exempt and is not available for purchase in California or for use on any vehicle registered with the California Department of Motor Vehicles.

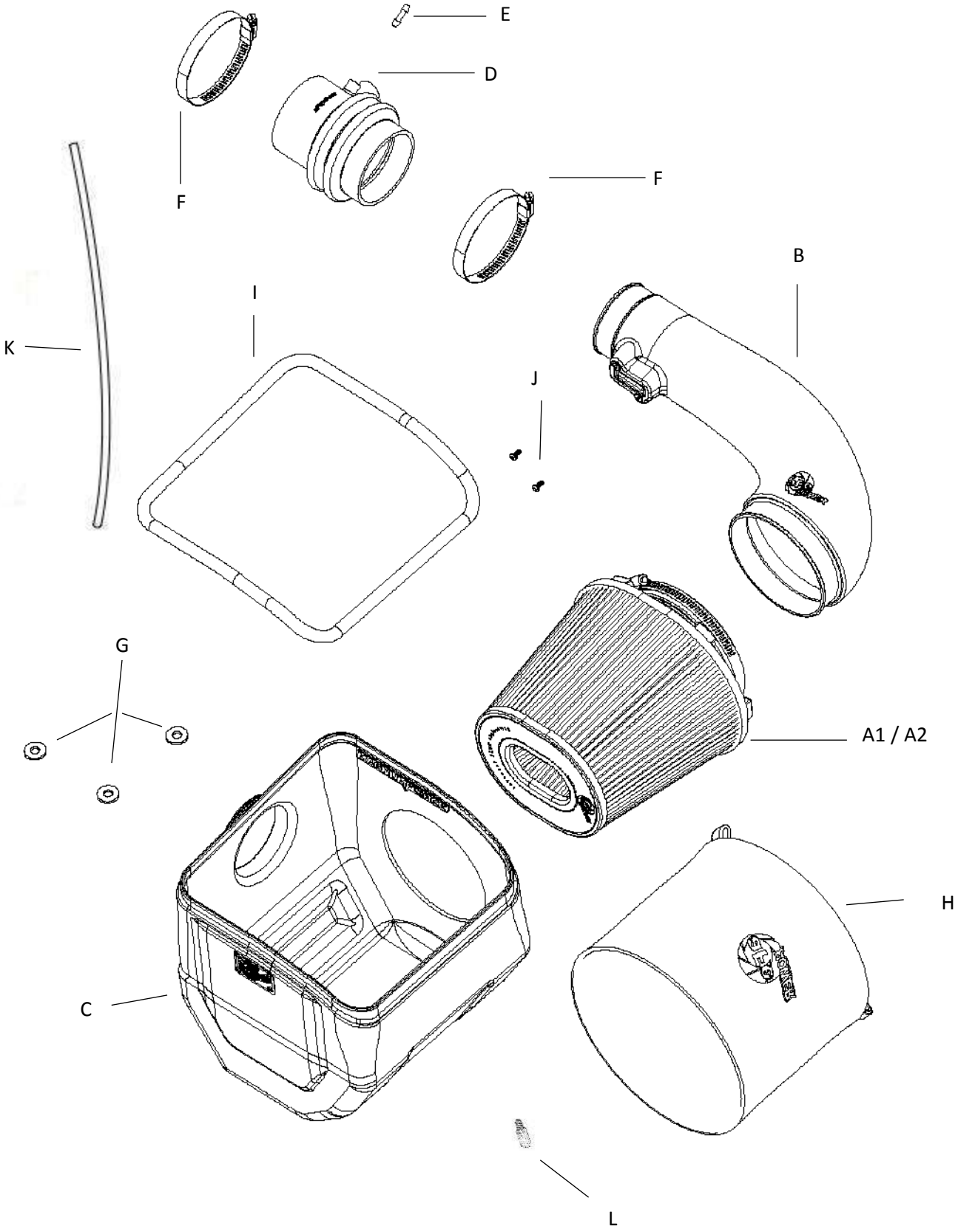
E
D
F
F
K
I
B
J
G
A1 / A2
H
C
L



Figure A

Refer to Figure A for Step 1

Step 1: To remove the engine cover, remove the three 10mm screws (1) and one 10mm nut (2) on the engine cover with a 10mm nut driver and pull up on the cover.



Figure B

Refer to Figure B for Steps 2-3

Step 2: Locate the two factory clamps (3) on the stock intake tube. Using an 8mm nut driver, loosen the clamps at the housing (4) and throttle body (5).

Step 3: Find the vacuum tube (6) on the front intake tube and unclip.



Figure C

Refer to Figure C for Steps 4-6

Step 4: Locate the resonance chamber on the tube. Using a 10mm nut driver, remove the screw (7) securing the chamber to the vehicle.

Step 5: Using a pair of pliers, remove the spring clamp (8) and remove the vacuum line from the tube.

Step 6: Pull the smaller vacuum hose (9) out of the vehicle. Now remove the entire intake tube.



Figure D

Refer to Figure D for Steps 7-8

Step 7: Disconnect the MAF sensor clip (10) .

Step 8: Using the supplied security bit, remove the two screws (11) securing the MAF sensor to the airbox and pull the sensor out. Set aside for later use.



Figure E

Refer to Figure E for Steps 9-10

Step 9: Remove the wing nuts (12) on the outside of the stock airbox and pull the airbox out of the vehicle. At the same time, detach the part of the secondary air tube (13) that attaches to the airbox.

Step 10: Now remove the four, 10mm screws (14) from holding the two brackets onto the vehicle. Remove the brackets and set aside the screws for later use.

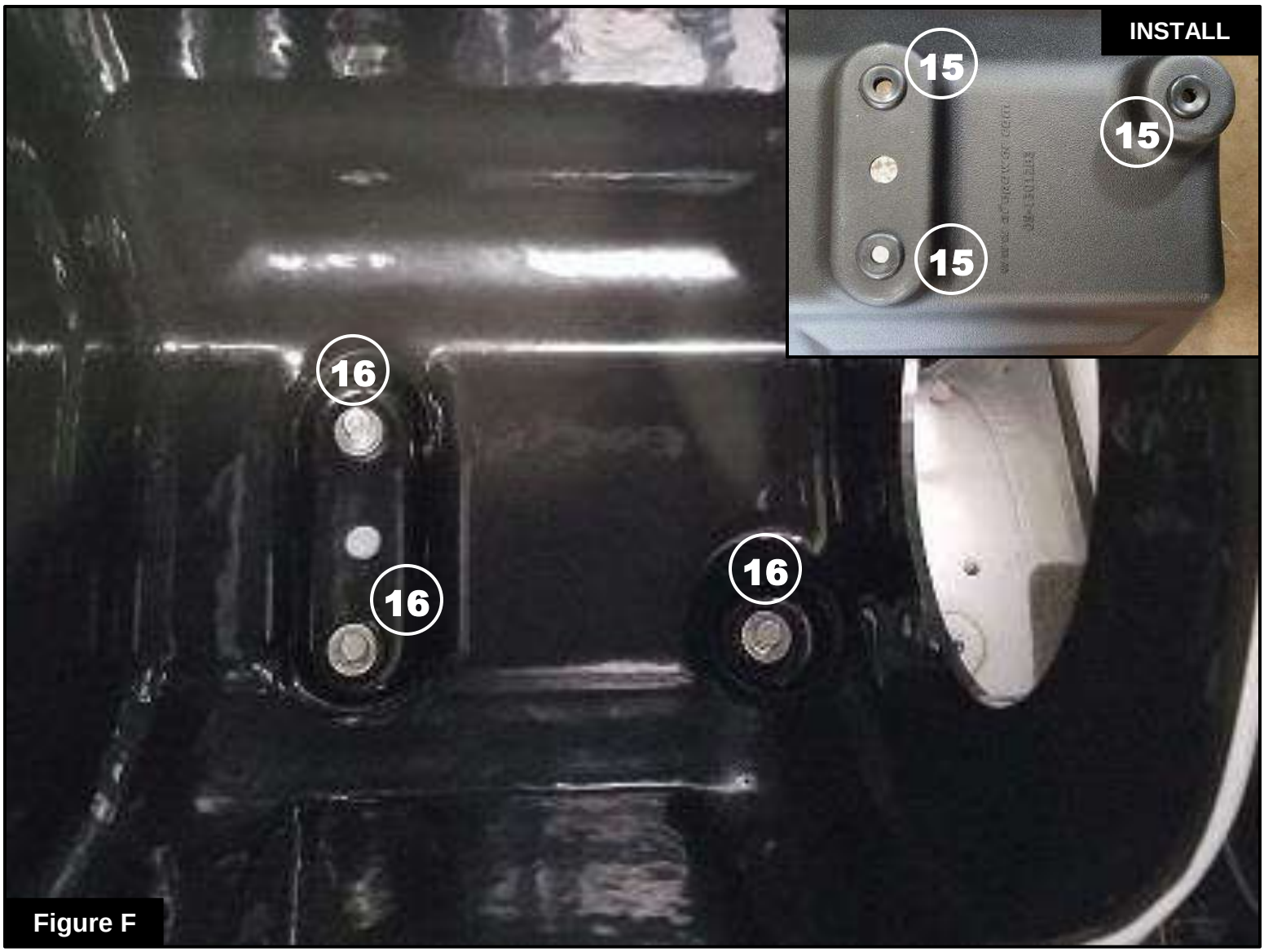

Figure F

Refer to Figure F for Steps 11-12

Step 11: Install the three supplied grommets (15) into the aFe Power airbox.

Step 12: Place the aFe Power airbox into the vehicle and use three of the 10mm screws (16) you removed earlier to secure it to the vehicle.



Figure G

Refer to Figure G for Steps 13-14

Step 13: Install the MAF sensor into the aFe Power intake tube and use the supplied security bit to tighten the two supplied M4 screws (17).

Step 14: Re-install the secondary inlet tube (18) to the aFe Power housing and attach the vacuum hose (19) you removed earlier.



Figure H

Refer to Figure H for Steps 15-16

Step 15: To remove the vacuum reservoir, use a pair of pliers to remove the clips on the three vacuum hoses (20) shown.

Step 16: Use a 10mm nut driver to remove the three screws (21) and remove the bracket and reservoirs from the vehicle.

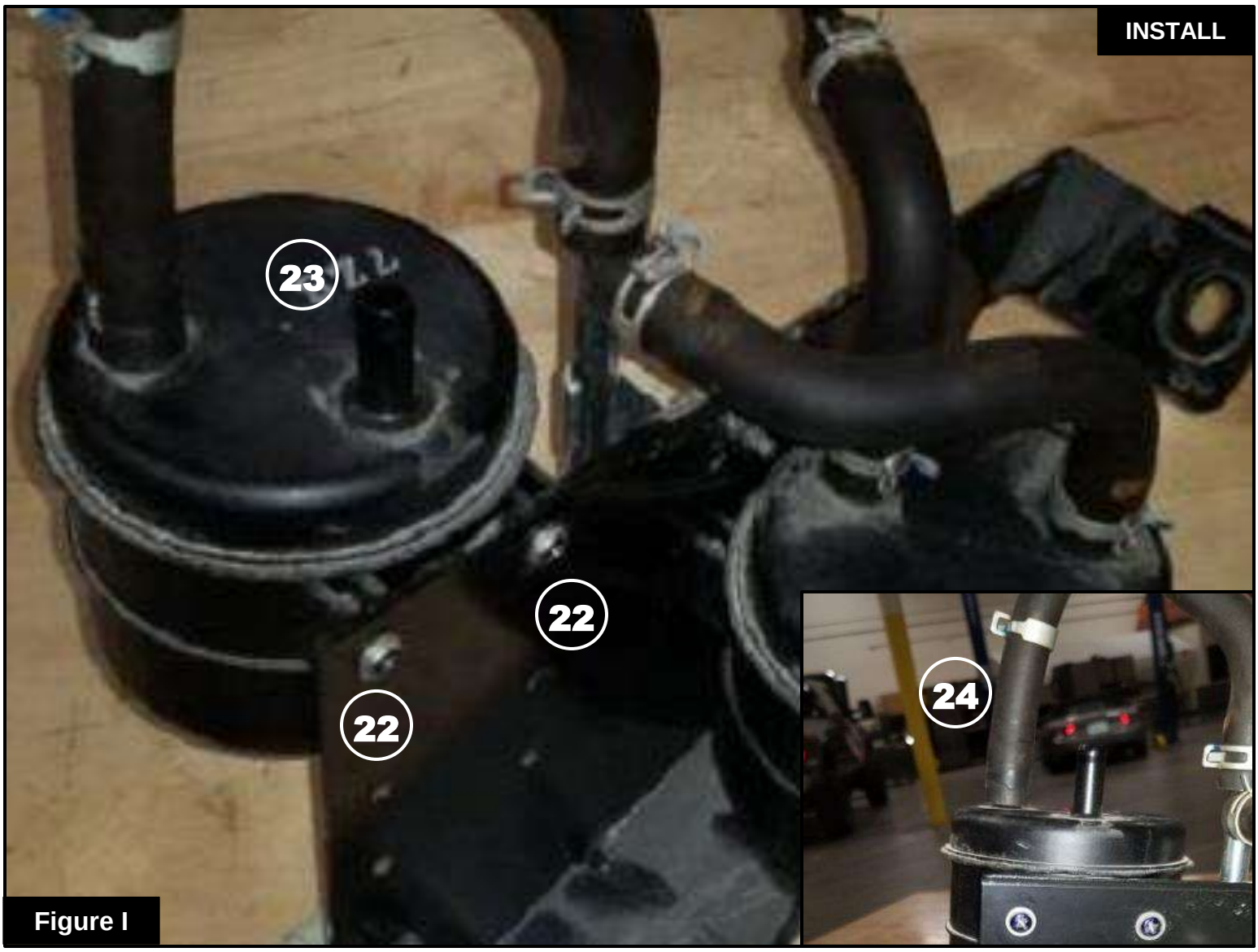

Figure I

Refer to Figure I for Steps 17-19

Step 17: With the vacuum assembly out of the vehicle, it is now time to flip the left reservoir to the back-side of the bracket as shown.

Step 18: Remove the two screws (22) using a Phillip's head screw-driver and swing the reservoir (23) to the back of the bracket. Re-install the reservoir on the top most mounting points with the screws you just removed.

Step 19: If your hose became kinked/twisted after Step 18, use a pair of pliers to unclip the vacuum hose (24) and properly seat it as shown.



Figure J

Refer to Figure J for Steps 20-21

Step 20: Re-connect the three vacuum hoses, (25) you removed earlier to their respective locations as shown in Figure J and reinstall the clamps using a pair of pliers.

Step 21: Re-install the three 10mm screws, (26) that held the bracket down and tighten with a 10mm nut driver.

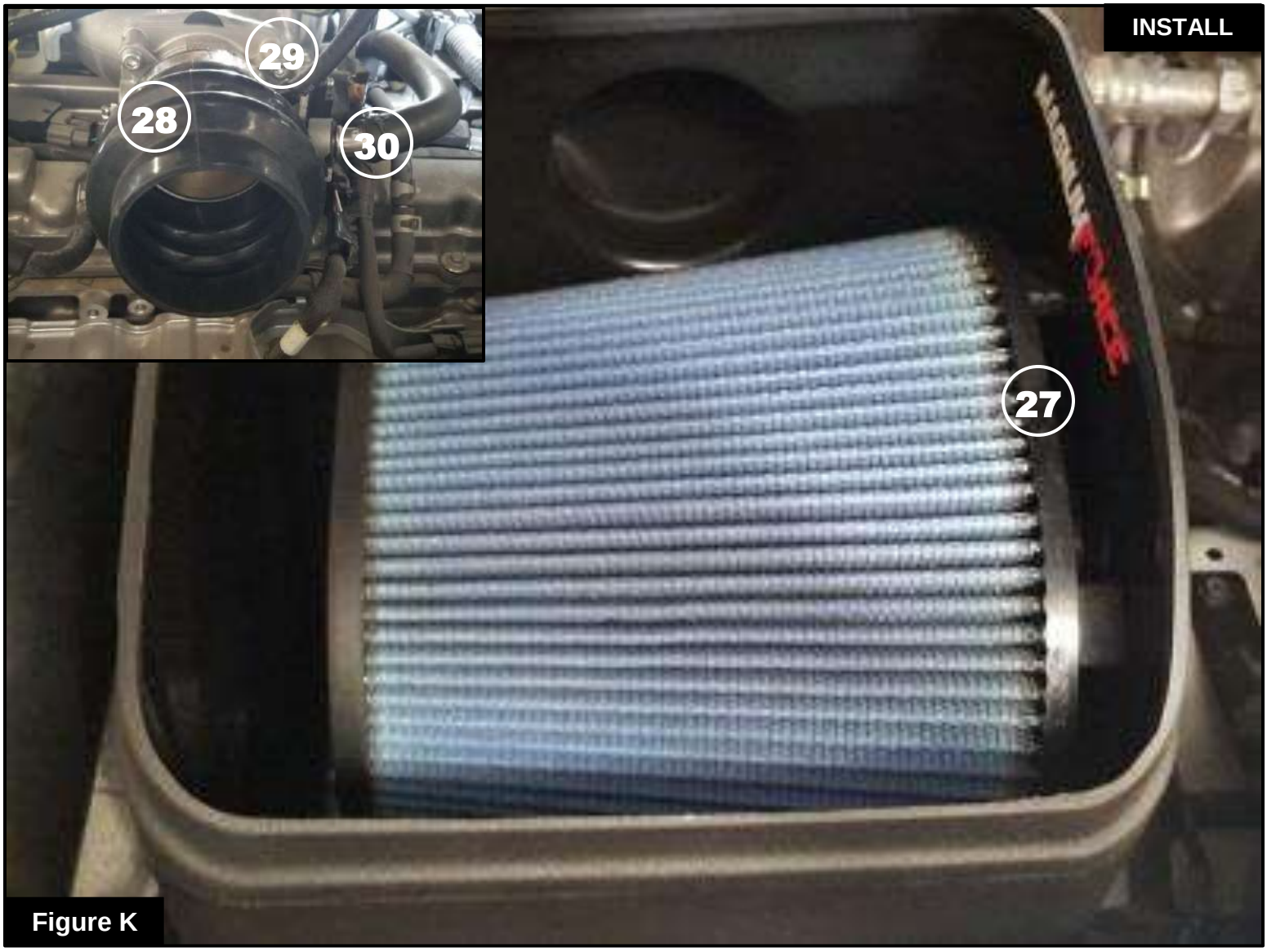

Figure K

Refer to Figure K for Steps 22-24

Step 22: Install the pre-filter onto the filter at this time if desired. Now Install the filter (27) into the aFe Power airbox and ensure it is fully and properly seated.

Step 23: Slip the supplied coupling (28) with one clamp over the throttle body as shown.

Step 24: Next install the supplied barb (29) into the small port on the coupling followed by the small vacuum hose. Install the clip and the larger hose (30) you took off earlier into the larger port on the coupling.

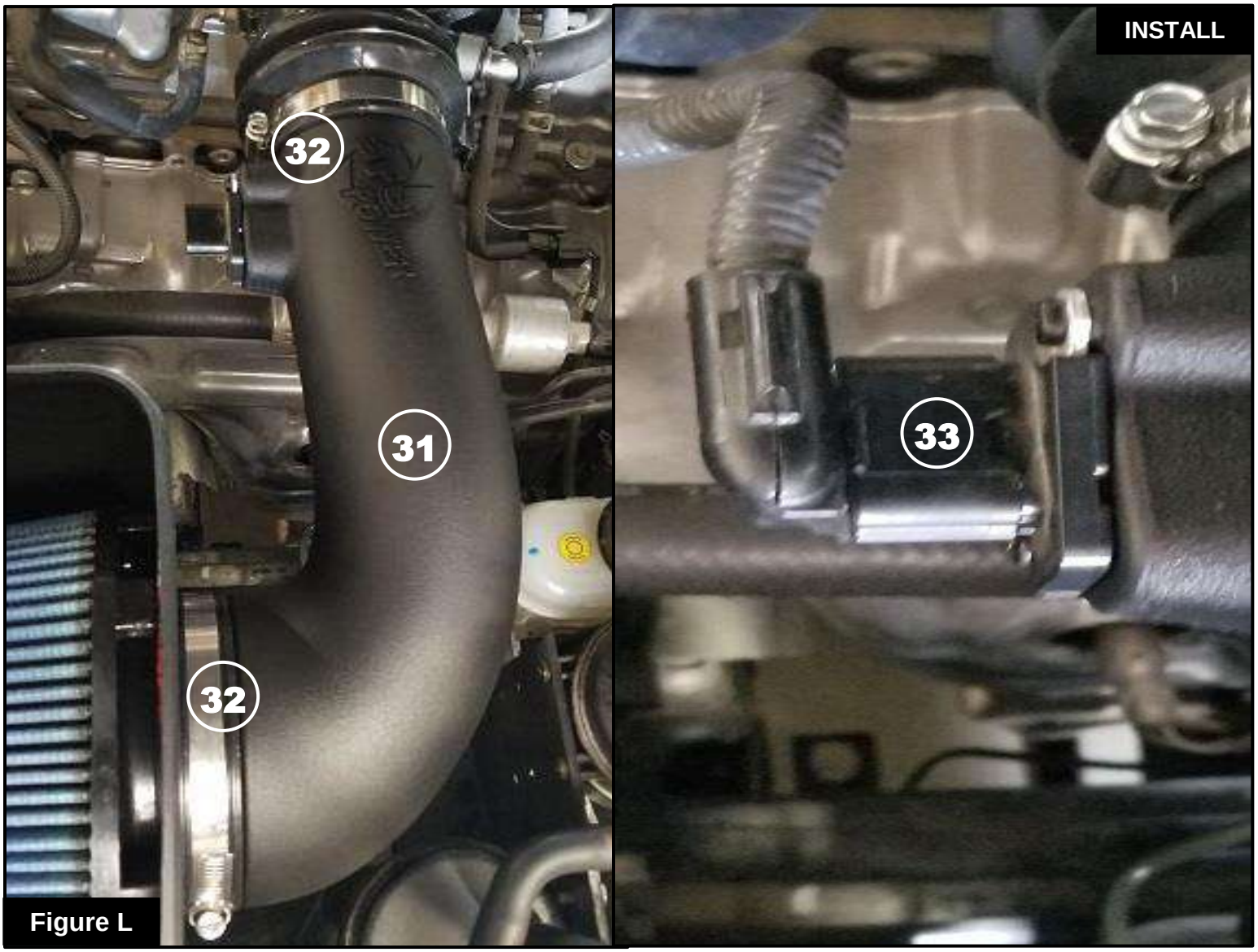

Figure L

Refer to Figure L for Steps 25-26

Step 25: Install the aFe Power intake tube (31) along with the two respective clamps (32) into the vehicle and tighten clamps using an 8mm nut driver.

Step 26: Re-connect the wiring harness (33) to the MAF sensor.



Figure M

Refer to Figure M for Steps 27-29

Step 27: Install the supplied trim seal (34) onto the top of the housing. Trim to fit.

Step 28: Re-install the engine cover with the hardware you removed earlier,

Step 29: Check that all components are tight and secure. Your installation is now complete. Thank you for choosing aFe POWER!

NOTE: Check all bolts, clamps, and connectors after 100-200 miles.

Pro DRY S Air Filter



P/N: 21-91146

Pro 5R Air Filter



P/N: 24-91146

Pro Guard7 Air Filter



P/N: 72-91146

Pre-Filter



P/N: 28-10033

Pro DRYS Restore Kit



P/N: 90-59999

Blue Squeeze Restore Kit



P/N: 90-50501

Gold Squeeze Restore Kit



P/N: 90-50500

Throttle Body Spacer



P/N: 46-36009

Sprint Booster V3



P/N: 77-16103

Check out the collection of performance air intake systems we offer.